PROJECT MANUAL

for

GAYLORD COMMUNITY SCHOOLS

SF3.8 – 2024 SINKING FUND PROJECTS
BID PACKAGE NO. 4
Board Office / Early Childhood Center (BOECC)
Generator & ATS Installation

PROJECT NO. 0284-20H.6

April 18, 2025

ANTHONY P. ESSON
ARCHITECT

PO BOX 479 GAYLORD, MICHIGAN 49734
TELEPHONE: (989) 732-0585

DOCUMENT 00 01 01

PROJECT TITLE PAGE

PROJECT NAME: GAYLORD COMMUNITY SCHOOLS
PROJECT 3.8 – 2024 SINKING FUND PROJECTS
BID PACKAGE NO. 4
Board Office / Early Childhood Center (BOECC)
Generator & ATS Installation

OWNER: Gaylord Community Schools
615 South Elm Street
Gaylord, MI 49735
Contact: David Parsell, Transportation and Maintenance Director
Telephone: 989/731-5230

ARCHITECT: Anthony Esson, Architect

Mailing Address:
P.O. Box 479
Gaylord, MI 49734

Shipping Address:
2111 Forester Drive
Frederic, MI 49733

Contact: Anthony P. Esson, Architect, LEED AP
PH: 989-350-1827
tony@anthonyessonarchitect.com

MEP ENGINEER JLK Engineering
795 Fairway Drive
PH: 989-614-4225
Gaylord, MI 49735
jkowatch@jlkengineering.com

CONSTRUCTION MANAGER: Sugar Construction, Inc.
2968 Venture Drive
Midland, MI 48640
Contact: Jerry Brown, Project Manager
PH: 989-631-4154
jerrybrown@sugarconstruction.com

DOCUMENT 00 01 10

TABLE OF CONTENTS

Section Title

PROCUREMENT AND CONTRACTION REQUIREMENTS GROUP
DIVISION 00 - PROCUREMENT AND CONTRACTING REQUIREMENTS

INTRODUCTORY INFORMATION

00 01 01 Project Title Page 1
00 01 10 Table of Contents 2

PROCUREMENT REQUIREMENTS

00 11 16 Invitation to Bid 2
00 21 13 Instructions to Bidders 6
Bid Category 15.3 – Plumbing 3
Bid Category 16.0 – Electrical 3
00 31 00 Available Project Information 1
Section 26 32 13 – Packaged Generator Set (Generator Pre-purchase Specifications) . 15
Section 26 36 23 – Automatic Transfer Switch (ATS Pre-purchase Specifications) 12
Reviewed Generator/ATS Submittals 75
Generac Install Guidelines for Standby Industrial Generators 76
Generac Natural Gas Supply System Design Guide 13
00 41 13 Bid Form - Stipulated Sum 3
00 45 01 Familial Disclosure Statement 1
00 45 02 Iran Economic Sanctions Act Compliance Affidavit 1

CONTRACTING REQUIREMENTS

00 52 14 Agreement Form 1
Sample Subcontract Agreement 6
00 72 14 General Conditions 1
AIA A201-2007 as Modified 66

SPECIFICATIONS GROUP
GENERAL REQUIREMENTS SUBGROUP

DIVISION 01 - GENERAL REQUIREMENTS

01 10 00 Summary 2
01 20 00 Price and Payment Procedures 4
01 30 00 Administrative Requirements 5
01 33 00 Submittal Procedures 5
01 40 00 Quality Requirements 3
01 50 00 Temporary Facilities and Controls 3
01 60 00 Product Requirements 3
01 70 00 Execution and Closeout Requirements 7

FACILITY SERVICES SUBGROUP

DIVISION 23 – PLUMBING

22 00 01 General Plumbing Requirements 10
22 10 05 Plumbing Piping 8

DIVISION 26 - ELECTRCAL

26 00 01 General Electrical Requirements 12
26 05 19 Low-Voltage Electrical Power Cables (600 V And Less) 5
26 05 26 Grounding and Bonding for Electrical Systems 3
26 05 29 Hangers and Supports for Electrical Systems 2
26 05 34 Conduit 6
26 05 37 Boxes 3
26 05 53 Identification for Electrical Systems 2
26 24 16 Panelboards 6
26 27 01 Electrical Service Entrance 2
26 27 17 Equipment Wiring 2

END OF SECTION

DOCUMENT 00 11 16

INVITATION TO BID

Project:

GAYLORD COMMUNITY SCHOOLS
PROJECT SF3.8 – 2024 SINKING FUND PORJECTS
BID PACKAGE NO. 4
Board Office / Early Childhood Center (BOECC)
Generator & ATS Installation

Owner:

Gaylord Community Schools
615 South Elm Street
Gaylord, MI 49735

Architect/Engineer:

Anthony P. Esson, Architect, PLLC
PO Box 479
Gaylord, MI 49734

Date: April 18, 2025

Gaylord Community Schools will receive Bids for installation of Owner pre-purchased Packaged Spark Ignited Engine-Driven Generator Set and Automatic Transfer Switch at the Gaylord Community Schools Board Office / Early Childhood Center building located at 615 South Elm St., Gaylord, MI 49735.

Sealed Bids may be delivered in person to Gaylord Community Schools, c/o Joe Hart, Business Manager, 615 South Elm Street, Gaylord, MI 49735. Bids must be received prior to 10:30 AM local time on May 22, 2025. Bids will be opened publically and read aloud at 10:30 AM local time on May 22, 2025, in the Board Meeting Room in the BOECC building, 615 South Elm Street, Gaylord, MI 49735. The Owner will not consider or accept a bid received after the date and time specified for bid submission. Post Bid Interviews with the apparent low Bidder(s) will be scheduled following receipt of Bids. All Bids will be evaluated at a later date.

Bidding Documents will be available on or about April 25, 2025. Interested Bidders may view and download bidding documents at www.sugarconstruction.com/current-bids. Select Gaylord Community Schools, SF3.8 – 2024 Sinking Fund Projects; Bid Package No. 4; Board Office / Early Childhood Center Generator & ATS Installation.

Bidding Documents will also be on file at the following Plan Rooms.

Builders Exchange Traverse City, Grand Rapids, Lansing, and Saginaw

Each Bidder shall include with its Bid, a sworn and notarized statement disclosing any familial relationships that exist between the owner or any employee of the Bidder and any member of the Board of Education of the Superintendent of the School District.

Compliance with the Iran Economic Sanctions Act (PA 517 of 2012) is required. Each Bidder shall include a sworn and notarized certification that they are not an "Iran Linked Business" as the term is defined in the Act.

A Bid security in the amount of no less than 5 percent of the Bid Sum in the form of a Bid Bond, or certified check payable to the Owner shall accompany each Bid. A personal or company check does not constitute a Bid security.

Refer to other bidding requirements described in Document 00 21 13.

Bids shall be submitted on the Bid Form provided in the Bidding Documents. Bidders may supplement this form as appropriate.

Bidders will not be required to furnish Performance and Labor/Material Payment Bonds for this project.

Bids will be required to be submitted under a condition of irrevocability for a period of 60 days after submission.

The Owner reserves the right to accept or reject any or all Bids, either in whole or in part; to award the Contract to other than the lowest Bidder; to waive any irregularities and/or informalities; and in general to make awards in any manner deemed to be in the best interest of the Owner.

END OF DOCUMENT

DOCUMENT 00 21 13

INSTRUCTIONS TO BIDDERS

1.1 SUMMARY

A. Document Includes:
1. Bid submission.
2. Intent.
3. Work identified in contract documents.
4. Contract Time.
5. Definitions.
6. Contract Documents identification.
7. Availability of documents.
8. Examination of documents.
9. Inquiries and Addenda.
10. Product substitutions.
11. Site examination.
12. Prebid conference.
13. Subcontractors.
14. Submission procedure.
15. Bid ineligibility.
16. Security deposit.
17. Performance Assurance.
18. Bid Form requirements.
19. Bid Alternates.
20. Fees for changes in the Work.
21. Bid Form signature.
22. Familial Disclosure Statement
23. Iran Economic Sanctions Act Compliance Affidavit
24. Bid opening.
25. Duration of offer.
26. Selection and Award of Alternates
27. Acceptance of offer.

B. Related Documents:
1. Document 00 11 16 - Invitation to Bid.
2. Document 00 31 00 - Available Project Information.
3. Document 00 41 13 - Bid Form - Stipulated Sum (Trade Contract).

1.2 BID SUBMISSION

A. Bids signed and under seal, executed, and dated will be received by Gaylord Community Schools c/o Joe Hart, Business Manager, 615 S. Elm Street, Gaylord, MI 49735, until 10:30 AM local time on the 22nd day of May, 2025.

B. Bids submitted after the above time will be returned to Bidder unopened.

C. Amendments to submitted Bids will be permitted when received in writing prior to bid closing and when endorsed by the same party or parties who signed and sealed the Bid.

D. Bidders may withdraw their Bid by written request at any time before bid closing.

1.3 INTENT

A. The intent of this Bid request is to obtain an offer to perform Trade Contract work to complete the Work described in the Contract Documents.

B. This is a “Construction Management as Constructor” project and there will be no “general contractor”. The Construction Manager will award trade contracts for each Bid Category as described below:
   1. Bid Category 15.3 – Plumbing
   2. Bid Category 16.0 - Electrical

1.4 WORK IDENTIFIED IN CONTRACT DOCUMENTS

A. Work of this proposed Contract comprises renovations and improvements to the Gaylord Community Schools Board Office / Early Childhood Center and includes installation of a pre-purchased packaged generator and automatic transfer switch as described in the drawings, specifications and specific Bid Categories for each trade discipline.

B. Locations:
   1. Board Office / Early Childhood Center; 615 South Elm St., Gaylord, MI 49735.

1.5 CONTRACT TIME

A. Perform the Work within time stated in Document 00 52 14, Sample Subcontract Agreement, and Sample Subcontract Agreement - Exhibit "A". The Bidder, in submitting an offer, accepts the Contract Time period stated for performing the Work.

1.6 DEFINITIONS

A. Bidding Documents: Contract Documents supplemented with Invitation To Bid, Instructions to Bidders, Information Available to Bidders, Bid Form, and bid securities, identified

B. Contract Documents: As defined in AIA Document A201-2007 Article 1, including issued Addenda.

C. Bid: Executed Bid Form and required attachments submitted in accordance with these Instructions to Bidders.

D. Bid Price: Monetary sum identified by the Bidder in the Bid Form.

1.7 CONTRACT DOCUMENTS IDENTIFICATION

A. The Contract Documents are identified as Project No. 284-20H.6 Gaylord Community Schools Project SF3.8 – 2024 Sinking Fund Projects; Bid Package No. 4; Board Office / Early Childhood Center Generator & ATS Installation as prepared by Anthony P. Esson, Architect.

1.8 AVAILABILITY OF DOCUMENTS

A. Bidding Documents may be obtained as stated in Invitation to Bid.

B. Partial sets of Bidding Documents will not be issued to Bidders.

C. Bidding Documents are made available only for the purpose of obtaining offers for this Project. Their use does not grant a license for other purposes.

1.9 EXAMINATION OF DOCUMENTS

A. Bidders are responsible for full examination of the drawings, specifications, exhibits and any Addenda prior to submission of bids.

B. Bidding Documents may be viewed at the office of the Owner

C. Upon receipt of Bidding Documents verify documents are complete. Notify Architect/Engineer if documents are incomplete.

D. Immediately notify Architect/Engineer upon finding discrepancies or omissions in Bidding Documents.

1.10 INQUIRIES AND ADDENDA

A. Direct questions in writing to Anthony P. Esson, at the office of the Architect/Engineer; e-mail at tony@anthonyessonarchitect.com.

B. Verbal answers are not binding on any party.

C. Submit questions not less than 7 days before date set for receipt of Bids. Replies will be made by Addenda.

D. Addenda may be issued during bidding period. Addenda will be posted on the Construction Manager's website. Addenda become part of the Contract Documents. Include resultant costs in the Bid Price.

1.11 PRODUCT SUBSTITUTIONS

A. Where Bidding Documents stipulate particular Products, substitution requests will be considered by Architect/Engineer up to 5 days before receipt of Bids.

B. With each substitution request, provide sufficient information for Architect/Engineer to determine acceptability of proposed products.

C. When a request to substitute a Product is made, Architect/Engineer may approve the substitution. Approved substitutions will be identified by Addenda.

D. In submission of substitutions to Products specified, Bidders shall include in their Bid, changes required in the Work, changes to Contract Time and Contract Price to accommodate such approved substitutions. Later claims by the Bidder for an addition to the Contract Time or Contract Price because of changes in Work necessitated by use of substitutions will not be considered.

1.12 SITE EXAMINATION

A. Examine Project site before submitting a Bid.

1.13 PREBID CONFERENCE – Not Used

1.14 SUBCONTRACTORS

A. The owner reserves the right to reject a proposed subcontractor for reasonable cause.

B. Refer to AIA Document A201-1997 Article 5 of General Conditions.

1.15 SUBMISSION PROCEDURE

A. Bidders shall be solely responsible for delivery of Bids in manner and time prescribed.

B. Submit three copies of executed offer on Bid Forms provided, signed and sealed with required security deposit in a closed opaque envelope, clearly identified with Bidder's name, Project name, Specific Bid Category and Owner's name on the outside.

C. Each Bid Category must be bid in its' entirety. Bid qualifiers that omit portions of the work will be grounds for rejection.

D. Bidders may bid more than one Bid Category however each category must be bid separately, using separate Bid Forms, in separate envelopes.

E. An abstract summary of submitted Bids will be made available to all Bidders following bid opening.

1.16 BID INELIGIBILITY

A. Bids that are unsigned, improperly signed or sealed, conditional, illegible, obscure, contain arithmetical errors, erasures, alterations, or irregularities of any kind, will be declared unacceptable at Owner's discretion.

B. Bid Forms, Appendices, and enclosures which are improperly prepared will be declared unacceptable at Owner's discretion.

C. Failure to provide security deposit, bonds or insurance requirements will invalidate the Bid at the discretion of the Owner.

D. Bidders that are "Iran Linked Businesses" as the term is defined in PA 517 of 2012, Iran Economic Sanctions Act are ineligible to Bid. Eligible Bidders must submit certification in accordance with the Act. Refer to Section 00 45 02.

1.17 SECURITY DEPOSIT

A. Bids shall be accompanied by security deposit as follows:
   1. Bid Bond in the amount of not less than five percent (5%) of the Bid Price on standard surety company form or;
   2. Certified check payable to Owner in the amount of five percent (5%) of the Bid Price.

B. Endorse Bid Bond in name of Gaylord Community Schools as obligee, signed and sealed by the principal (Contractor) and surety.

C. Endorse certified check in name of Gaylord Community Schools.

1.18 PERFORMANCE ASSURANCE

A. This project will be administered by a Construction Manager as Constructor. The Construction Manager shall provide Performance and Payment bonds for the project.

1.19 BID FORM REQUIREMENTS

A. Complete requested information in the Bid Form and Bid Form Supplements.

1.20 BID ALTERNATES

A. Indicate variation of Bid Price for mandatory alternates listed in the Bid Form. Indicate "difference" in Bid Price by adding to or deducting from base Bid Price.

B. Voluntary Alternates may be proposed by Bidders without invalidating Bids. Include an attachment with description of voluntary alternates proposed, reason for proposing such alternates and any associated change in cost or time.

1.21 FEES FOR CHANGES IN THE WORK

A. Include in the Bid Form, the overhead and profit fees on Bidder’s own Work and Work by Subcontractors, applicable for Changes in the Work, whether additions to or deductions from the Work on which the Bid Price is based.
   1. Overhead and profit fees may not exceed 10%.
   2. Overhead and profit fees will be applied to the net cost of additions to, or the net cost of deductions from the Work.

1.22 BID FORM SIGNATURE

A. Sign Bid Form, as follows:
   1. Sole Proprietorship: Signature of sole proprietor in the presence of a witness who will also sign. Insert the words "Sole Proprietor" under the signature. Affix seal.
   2. Partnership: Signature of all partners in the presence of a witness who will also sign. Insert the word "Partner" under each signature. Affix seal to each signature.
   3. Corporation: Signature of a duly authorized signing officers in their normal signatures. Insert the officer's capacity in which the signing officer acts, under each signature. Affix the corporate seal. If the Bid is signed by officials other than the president and secretary of the company, or the president/secretary/treasurer of the company, submit a copy of the by-law resolution of their board of directors authorizing them to do so, with the Bid Form in the bid envelope.
   4. Joint Venture: Signature of each party of the joint venture under their respective seals in a manner appropriate to such party as described above, similar to requirements for Partnerships.

1.23 FAMILIAL DISCLOSURE STATEMENT

A. Include Familial Disclosure Statement – 00 45 01.

B. Complete all requested information in the affidavit.

C. Signature of the affidavit shall be notarized.

D. Failure of the Bidder to submit a fully executed affidavit will result in disqualification of the bidder.

1.24 IRAN ECONOMIC SANCTIONS ACT COMPLIANE AFFIDAVIT

A. Include Iran Economic Sanctions Act Compliance Affidavit – 00 45 02.

B. Complete all requested information in the affidavit.

C. Signature of the affidavit shall be notarized.

D. Failure of the Bidder to submit a fully executed affidavit will result in disqualification of the bidder.

1.25 BID OPENING

A. Bids will be opened publicly immediately after time for receipt of Bids. Bidders may be present.

1.26 DURATION OF OFFER

A. Bids shall remain open to acceptance and shall be irrevocable for a period of 30 days after bid closing date.

1.27 SELECTION AND AWARD OF ALTERNATES

A. Bids will be evaluated on total of base Bid Price with full consideration of selected mandatory alternates. Mandatory alternates awarded after the award of contract will be included the contract by Change Order. Alternates awarded by change order after contract award will be subject to adjustment in cost and or time as may be justified by changes in market conditions and/or product availability.

B. Voluntary Alternates offered by Bidders will not be considered in the award of Contract. Any voluntary alternates accepted will be included in the contract by Change Order.

1.28 ACCEPTANCE OF OFFER

A. The Owner reserves the right to accept or reject any or all offers.

B. After acceptance by the Owner, the Construction Manager, on behalf of the Owner, will issue to the accepted Bidder, a written Notice to Proceed.

C. Notwithstanding delay in the preparation and execution of the Agreement, accepted Bidder shall be prepared, upon written Notice to Proceed, to commence work within (3) days following receipt of official written order of the Owner to proceed, or on date stipulated in such order.

D. The accepted bidder shall enter into a Contract Agreement with the Construction Manager, and within (5) days following its presentation shall execute Agreement and return it to the Construction Manager.

END OF DOCUMENT

BID CATEGORY 15.3 – PLUMBING

General Inclusions for This Category's Work

1. The term "general contractor" will not apply to any body of work for this project. Each trade discipline will be responsible for such work as described by Bid Category content.
2. Provide all required layout for this Bid Category's work.
3. Provide daily housekeeping and clean up and dispose of any wastes generated by this bid category in dumpster provided by the Construction Manager unless noted otherwise in Specific Inclusions below. "Daily" means daily. Should it be necessary for the Construction Manager to get involved in clean up the costs will be passed along to this contractor.
4. Contractor shall have a competent supervisor on site while performing any work for this bid category.
5. Contractor shall be responsible for coordination and interface with other contractors for the duration of the project.
6. Contractor shall be responsible for the receiving, unloading, storage and storage facilities for materials brought to the site.
7. The owner shall have the right to reclaim demolished materials.
8. All front end paperwork such as insurance certificates, schedule of values, submittals and/or shop drawings must be submitted to the Construction Manager within ten work days of award.
9. Contractor shall be responsible for safe work practices as required by Michigan Laws and as per the safety policy of the Construction Manager.
10. Contractor is responsible for the complete bid documents including drawings, specifications, Addenda, schedules, etc. and shall perform all that is required for a complete product that complies with same.
11. Contractor's representative shall attend scheduled progress meetings each week as directed by the Construction Manager.
12. Any Contractor that knowingly installs their work on another's mistake or faulty work will be responsible for correcting same.
13. All contractors shall complete their work to a fully operational condition in full compliance with governing codes and authorities.
14. Contractors shall obtain and pay all costs for permits that are associated with this categories work. Scheduling inspections by governing officials will be by this bid category and shall be coordinated with the Construction Manager. The Building Permit will be purchased by the Construction Manager.
15. Copies of permits (if applicable) shall be forwarded to the Construction Manager as soon as received. Occupancy approvals shall also be forwarded on or before the date of substantial completion.
16. Contractor shall supply sufficient manpower or any overtime that might be required to meet the project schedule.
17. Contractor is responsible for the protection of existing structures, plants, lawns, trees, etc.
18. Mud and/or debris tracked onto the parking lots, streets or any roadways by this contractor shall be swept and properly cleaned by this contractor.
19. Bid Category descriptions are intended to define the job scope in as much detail as possible however not necessarily "all" inclusive. Each bidder shall review all Bid Categories for a clear understanding of responsibility of scope and should advise the Architect of any conflicts or irregularities that could affect the bidding or the execution of this contract.
20. Should there be a conflict regarding <u>assignment of work</u> between the Bid Category descriptions and notes and/or Architect's specifications, the Bid Category descriptions shall take precedence.
21. All Contractors shall be subject to <u>liquidated damages</u> for failure to meet the specified date of substantial completion as set forth in these documents and/or obtaining a Certificate of Occupancy (temporary or final), by the Michigan Bureau of Construction Codes prior to said date.

22. The Construction Manager will have a safety policy governing the work activities of this project. Each Contractor shall comply with said policy as well as the minimum requirements under Michigan Law.
23. The Construction Manager will designate an area outside the school for contractor lunch room trailers.
24. Smoking is not permitted anywhere on School Property.
25. Questions that arise during the construction period shall be directed to the Construction Manager who will provide the appropriate response. Contractors shall not approach the owner or any persons employed by the owner with job questions or concerns.
26. Certain areas may be occupied by the owner during construction. Profane or abusive language, pornography, etc. will not be tolerated.
27. Provide and maintain dust control for this Bid Category's work.
28. Contractors will have access to the site from 7:00am to 5:30pm weekdays only. Weekend work may be granted by special permission or if so stated in your bid proposal.

The contractor shall provide all labor, materials and equipment to perform the work specified in the construction documents and as set forth in this Bid Category description.

Specifications Included for This Bid Category:
(Total responsibility for these sections in their entirety unless otherwise noted)

22 0000 – Plumbing (All Sections)

Reference Specifications for This Bid Category:
(Include portions of these specifications as they apply to this bid category)

All sections under Division 1 General Requirements

Inclusions for This Project: (but not limited to):
Any work that may be reasonably construed as part of this bid category's responsibility shall be included.

1. This Bid Category shall include an **Allowance of $10,000.00** in their proposal for potential repairing/replacing leaks within the existing BOECC gas service near the boiler room.
2. Bid all required Alternates.
3. Coordination with other trade contractors.
4. Provide the required permits for work in this Bid Category.
5. Demolish and dispose of existing plumbing and piping as shown on the plans.
6. Furnish a dumpster and pay for disposal of materials demolished under this Bid Category.
7. Install new plumbing, gas piping per plans.
8. Provide Unistrut support for new gas service header in base bid.
9. Provide all required painting for this scope of work.
10. Provide any required roof penetrations and/or roof repairs as required for this Bid Category's work.
11. This Bid Category will be responsible for protection of existing finishes that it may affect. Damages by this category will be repaired at the expense of this Bid Category.
12. Provide temporary lunch facilities for this bid category's work.

Exclusions:

1. Excavation, backfill and site restoration for underground gas line is by others.
2. Concrete foundations and/or pads with be furnished and installed by others.
3. Temporary restrooms will be provided by the Construction Manager.

END OF BID CATEGORY 15.3

BID CATEGORY 16.0 – ELECTRICAL

General Inclusions for This Category's Work

1. The term "general contractor" will not apply to any body of work for this project. Each trade discipline will be responsible for such work as described by Bid Category content.
2. Provide all required layout for this Bid Category's work.
3. Provide daily housekeeping and clean up and dispose of any wastes generated by this bid category in dumpster provided by the Construction Manager unless noted otherwise in Specific Inclusions below. "Daily" means daily. Should it be necessary for the Construction Manager to get involved in clean up the costs will be passed along to this contractor.
4. Contractor shall have a competent supervisor on site while performing any work for this bid category.
5. Contractor shall be responsible for coordination and interface with other contractors for the duration of the project.
6. Contractor shall be responsible for the receiving, unloading, storage and storage facilities for materials brought to the site.
7. The owner shall have the right to reclaim demolished materials.
8. All front end paperwork such as insurance certificates, schedule of values, submittals and/or shop drawings must be submitted to the Construction Manager within ten work days of award.
9. Contractor shall be responsible for safe work practices as required by Michigan Laws and as per the safety policy of the Construction Manager.
10. Contractor is responsible for the complete bid documents including drawings, specifications, Addenda, schedules, etc. and shall perform all that is required for a complete product that complies with same.
11. Contractor's representative shall attend scheduled progress meetings each week as directed by the Construction Manager.
12. Any Contractor that knowingly installs their work on another's mistake or faulty work will be responsible for correcting same.
13. All contractors shall complete their work to a fully operational condition in full compliance with governing codes and authorities.
14. Contractors shall obtain and pay all costs for permits that are associated with this categories work. Scheduling inspections by governing officials will be by this bid category and shall be coordinated with the Construction Manager. The Building Permit will be purchased by the Construction Manager.
15. Copies of permits (if applicable) shall be forwarded to the Construction Manager as soon as received. Occupancy approvals shall also be forwarded on or before the date of substantial completion.
16. Contractor shall supply sufficient manpower or any overtime that might be required to meet the project schedule.
17. Contractor is responsible for the protection of existing structures, plants, lawns, trees, etc.
18. Mud and/or debris tracked onto the parking lots, streets or any roadways by this contractor shall be swept and properly cleaned by this contractor.
19. Bid Category descriptions are intended to define the job scope in as much detail as possible however not necessarily "all" inclusive. Each bidder shall review all Bid Categories for a clear understanding of responsibility of scope and should advise the Architect of any conflicts or irregularities that could affect the bidding or the execution of this contract.
20. Should there be a conflict regarding <u>assignment of work</u> between the Bid Category descriptions and notes and/or Architect's specifications, the Bid Category descriptions shall take precedence.

21. All Contractors shall be subject to liquidated damages for failure to meet the specified date of substantial completion as set forth in these documents and/or obtaining a Certificate of Occupancy (temporary or final), by the Michigan Bureau of Construction Codes prior to said date.
22. The Construction Manager will have a safety policy governing the work activities of this project. Each Contractor shall comply with said policy as well as the minimum requirements under Michigan Law.
23. The Construction Manager will designate an area outside the school for contractor lunch room trailers.
24. Smoking is not permitted anywhere on School Property.
25. Questions that arise during the construction period shall be directed to the Construction Manager who will provide the appropriate response. Contractors shall not approach the owner or any persons employed by the owner with job questions or concerns.
26. Certain areas may be occupied by the owner during construction. Profane or abusive language, pornography, etc. will not be tolerated.
27. Provide and maintain dust control for this Bid Category's work.
28. Contractors will be given access to the site form 7:00am to 5:30pm weekdays only. Weekend work may be granted by special permission or if so stated in your bid proposal.
29. All punch list work and all closeout documents must be completed to the satisfaction of the architect before acceptance of any invoice for retainage or any portion of retainage.

The contractor shall provide all labor, materials and equipment to perform the work specified in the construction documents and as set forth in this Bid Category description.

Specifications Included for This Bid Category:
(Total responsibility for these sections in their entirety unless otherwise noted)

26 000 – Electrical (All Sections)
See Electrical Drawings for Electrical Requirements.

Reference Specifications for This Bid Category:
(Include portions of these specifications as they apply to this bid category)

All sections under Division 1 General Requirements

Inclusions for This Project: (but not limited to):
Any work that may be reasonably construed as part of this bid category's responsibility shall be included.

1. Coordination with other trade contractors
2. Bid all required Alternates.
3. Provide required electrical permit.
4. Electrical demolition.
5. Provide excavation, backfill and site restoration as required for underground gas lines, electrical and concrete foundations.
6. Furnish and install all required concrete work including associated reinforcement. Minimum 4000lb air entrained mix max 4" slump.
7. Install owner furnished Generator and Automatic Transfer Switch.
8. Provide commissioning and start up for owner furnished equipment.
9. Provide a dumpster for the demolition under this bid category and pay all costs for disposal.
10. Protect and maintain existing fencing and guardrail during construction.

11. Update Construction Manager's as built drawings weekly.
12. Provide temporary lunch facilities for this bid category's work.

Exclusions:

1. Temporary restrooms will be provided by the Construction Manager.

END OF BID CATEGORY 16.0

DOCUMENT 00 31 00

AVAILABLE PROJECT INFORMATION

1.1 SUMMARY

A. Document Includes:
1. Generator Pre-purchase Specifications
2. Automatic Transfer Switch Specifications
3. Generator & ATS Submittals.
4. Generac Installation Guidelines.
5. Generac Natural Gas System Design Guide.

1.2 GENERATOR PRE-PURCHASE SPECIFICATION

A. Section 26 32 13 - Package Generator Set dated 11-29-2024 is included for information.

B. The generator has been pre-purchased by the Owner and is being delivered to and stored at the site.

1.3 AUTOMATIC TRANSFER SWITCH PRE-PURCHASE SPECIFICATION

A. Section 26 36 23 – Automatic Transfer Switch dated 11-29-2024 is included for information.

B. The ATS has been pre-purchased by the Owner and is being delivered to and stored at the site.

1.4 GENERATOR AND ATS SUBMITTALS

A. Reviewed Submittal 1 for the pre-purchased Generator and ATS are included for information.

1.5 INSTALLATION GUIDELINES

A. Installation Guidelines for Generac Standby Industrial Generators are included for information.

B. Generac Natural Gas Supply System Design Guide is included for information.

END OF DOCUMENT

GCS SF3.8_Bid Package #4-BOECC Geneator & ATS Installation Project
NOTE: The Owner has already pre-purchased this Generator Set as part of Bid Package #3. This specification section is being issued for reference with regard to installation of the Generator Set as part of this Bid Pack.#4

SECTION 26 3213

SPARK IGNITED ENGINE-DRIVEN GENERATOR SETS

PART 1 - GENERAL

1.1 SCOPE

A. Furnish & deliver a new Generator Set, as described herein, to the Owner (Gaylord Community Schools = GGC) at the Board Office & Early Childhood Center (BOECC) building located @ 615 South Elm Ave, Gaylord, MI 49735 – Contact Mr. David Parsell @ 989-731-5230.

1. Owner will be commissioning a licensed Electrical Contractor (E.C.) to install the Generator & ATS.

B. Provide factory testing; Provide startup assistance & on-site testing to Owner's electrical subcontractor.

C. Provide a Preventative Maintenance Service Agreement as described herein.

1.2 SUMMARY

A. Section Includes:

1. Spark-Ignited Engine.
2. Natural Gas Fuel Supply System.
3. Control and monitoring.
4. Generator overcurrent and fault protection.
5. Generator, exciter, and voltage regulator.
6. Outdoor engine generator enclosure.
7. Vibration isolation devices.

B. Related Requirements:

1. Section 263623 "Automatic Transfer Switches" for transfer switches including sensors and relays to initiate automatic-starting and -stopping signals for engine generators.

1.3 DEFINITIONS

A. EPS: Emergency power supply.

B. EPSS: Emergency power supply system.

C. Operational Bandwidth: The total variation from the lowest to highest value of a parameter over the range of conditions indicated, expressed as a percentage of the nominal value of the parameter.

1.4 ACTION SUBMITTALS

A. Product Data: For each type of product.

1. Include rated capacities, operating characteristics, electrical characteristics, and furnished specialties and accessories.
2. Include thermal damage curve for generator.
3. Include time-current characteristic curves for generator protective device.
4. Include fuel consumption in gallons per hour (liters per hour) at 0.8 power factor at 0.5, 0.75, and 1.0 times generator capacity.
5. Include generator efficiency at 0.8 power factor at 0.5, 0.75, and 1.0 times generator capacity.

6. Include airflow requirements for cooling and combustion air in cubic feet per minute (cubic meters per minute) at 0.8 power factor, Provide Drawings indicating requirements and limitations for location of air intake and exhausts.
7. Include generator characteristics, including, but not limited to, kilowatt rating, efficiency, reactances, and short-circuit current capability.

B. Shop Drawings:

1. Dimensioned Outline Drawings of Equipment Unit: With engine and generator mounted on rails, identify center of gravity and total weight for provided components; fuel tank, enclosure, silencer, base tank, each piece of equipment not integral to the engine generator.
2. Include details of equipment assemblies. Indicate dimensions, weights, loads, required clearances, method of field assembly, components, and location and size of each field connection.
3. Identify fluid drain ports and clearance requirements for proper fluid drain.
4. Design calculations for selecting vibration isolators and seismic restraints and for designing vibration isolation bases.
5. Vibration Isolation Base Details: Detail fabrication including anchorages and attachments to structure and to supported equipment. Include base weights.
6. Include diagrams for power, signal, and control wiring. Complete schematic, wiring, and interconnection diagrams indicating terminal markings for engine generators and functional relationship between all electrical components.
7. Rigging Information: Indicate location of each lifting attachment, generator-set center of gravity, and total package weight in submittal drawings.

1.5 INFORMATIONAL SUBMITTALS

A. Seismic Qualification Data: Certificates, for engine generator, accessories, and components, from manufacturer.

1. Basis for Certification: Indicate whether withstand certification is based on actual test of assembled components or on calculation.
2. Detailed description of equipment anchorage devices on which the certification is based and their installation requirements.

B. Source Quality-Control Reports: Including, but not limited to, the following:

1. Certified summary of prototype-unit test report. Perform tests at rated load and power factor. Provide the following test results:

   a. Maximum Power Level
   b. Maximum Motor Starting (sKVA)
   c. Structural Soundness
   d. Torsional Analysis
   e. Transient Response
   f. Alternator Temperature Rise
   g. Engine Cooling Requirements (unit mounted radiator)
   h. Harmonic Analysis (per IEEE-115 and ANSI-100)
   i. Voltage Regulation
   j. Endurance Testing

2. Certified Test Reports: For components and accessories that are equivalent, but not identical, to those tested on prototype unit.
3. Report of factory test on units to be shipped for this Project, indicating evidence of compliance with specified requirements.
4. Report of sound generation.

5. Report of exhaust emissions indicating compliance with applicable regulations.
6. Certified Torsional Vibration Compatibility: Comply with NFPA 110.

C. Field quality-control reports. Field start up report and unit in-service documentation, including load bank test results if applicable.

1.6 CLOSEOUT SUBMITTALS

A. Operation and Maintenance Data: For packaged engine generators to include in emergency, operation, and maintenance manuals. Include manufacturer's recommended maintenance and periodic testing plan in accordance with NFPA 110, Chapter 8.

B. Furnish extra materials and that are packaged with protective covering for storage and identified with labels describing contents.

1.7 QUALITY ASSURANCE

A. The generator set covered by these specifications shall be designed, tested, rated, assembled and installed in accordance with all applicable standards below:

1. CSA C22.2, No. 14-M91 Industrial Control Equipment.
2. CSA C22.2, No. 100 Motors and Generators
3. CSA 282-15
4. EN 61000-6
5. EN 55011
6. FCC Part 15 Subpart B
7. ISO 8528
8. IEC 61000
9. UL 508
10. UL 2200
11. UL 142
12. UL 6200
13. Designed to allow for installed compliance to NFPA 37, NFPA 70, NFPA 99 and NFPA 110

B. Manufacturer Qualifications:

1. Current certificate holder for ISO 9001 compliance.
2. The power system shall be produced by a manufacturer who has produced this type of equipment for a period of at least 25 years and who maintains a service organization of factory-authorized generator technicians available twenty-four hours a day throughout the year.
3. Manufacturing and assembly of products must be done in the United States using domestically sourced materials to the extent practical.

C. Manufacturer’s Startup & Maintenance Representative Qualifications: An authorized representative who is trained and certified by the manufacturer on stationary power systems.

1.8 WARRANTY

A. Manufacturer's Warranty: Manufacturer agrees to repair or replace components of packaged engine generators and associated auxiliary components that fail in materials or workmanship within specified warranty period.

1. Warranty: Two (2) - Year Comprehensive from date of Substantial Completion.
2. A Comprehensive Warranty is defined as the manufacturer covering replacement parts, labor, and limited technician travel costs for covered warranty repairs during the listed warranty period. A Limited warranty is defined as the manufacturer covering replacement parts, labor, and limited technician travel costs for the first 2 years and then replacement parts for the remainder of the listed warranty period.

PART 2 - PRODUCTS

2.1 MANUFACTURERS

A. Basis-of-Design Product: Subject to compliance with requirements, provide & deliver:

Generac Power Systems, Inc.; 250 kW. 14.2L with a K0250124Y21 - 250kW alternator. The Three Phase generator shall be rated for 250 kW at 208 volts and 60 Hz, at 0.8 power factor lagging while operating at a maximum ambient temperature of 104 Fahrenheit and maximum altitude of 3500 feet above sea level without reduction in electrical output capacity. Comparable products by one of the following will also be considered:

1. Caterpillar, Inc.
2. Cummins Power Generation.

B. Source Limitations: Obtain packaged engine generators and auxiliary components from single source from single manufacturer. "Source Limitations: Obtain packaged engine generators and auxiliary components from single supplier. The equipment supplied and installed shall meet the requirements of NEC and all applicable local codes and regulations. All equipment shall be new, of current production. There shall be one source responsibility for warranty; parts and service through a local representative with factory certified service personnel.

C. Requests for substitutions shall be made a minimum of ten (10) days prior to bid date. Manufacturers catalog data and a completed generator sizing model using the proposed manufacturer's generator sizing software shall accompany each request and authorized acceptance shall be addenda only. Should any substitutions be made, the contractor shall bear responsibility for the installation, coordination and operation of the system as well as any engineering and redesign costs, which may result from such substitutions.

2.2 PERFORMANCE REQUIREMENTS

A. Seismic – non-OSHPD: Provide materials, bracing, and mounting to ensure generator will withstand, and continue to operate, through a seismic event. Present seismic calculations and certificate for the specific model generator in accordance with the relevant IBC and ASCE standard. This will include drawings of the generator and mounting details. Seismic Performance: Engine generator housing, sub-base fuel tank, engine-generator assembly, batteries, battery racks, silencers, sound attenuating equipment, accessories, and components to withstand the effects of earthquake motions determined in accordance with ASCE/SEI 7 when required on the project.

B. NFPA Compliance:

1. Comply with NFPA 37.
2. Comply with NFPA 70.
3. Comply with NFPA 99.
4. Comply with NFPA 110 requirements for Level 1 EPSS.

C. UL Compliance: Engine generator assembly and factory enclosure (if provided) shall be UL 2200 listed.

D. Engine Exhaust Emissions: Comply with applicable US EPA, State and Local Government requirements. Spark-ignited Stationary Emergency: Engines shall be certified by the manufacturer to comply with 40 CFR Part 60 Subpart JJJJ, Table 1, Emission Standards for Stationary Emergency SI Engines and Table 2, Requirements for Performance Tests.

2.3 ENGINE GENERATOR ASSEMBLY DESCRIPTION

A. Factory-assembled and -tested, water-cooled engine, with brushless generator and accessories.

B. Electrical Components, Devices, and Accessories: Listed and labeled as defined in NFPA 70, by a qualified testing agency, and marked for intended location and use.

C. Power Rating: Standby.

D. Service Load: The generator set shall be a Generac model 250 kW. 14.2L with a K0250124Y21 - 250kW alternator. It shall provide 250 kW and 312.5 kVA while operating at the maximum ambient operating temperature and elevation specified in the project documents.

E. Power Factor: 0.8 lagging.

F. Frequency: 60 Hz.

G. Voltage: 208 Volts ac.

H. Phase: Three Phase, Four Wire.

I. Induction Method: Naturally aspirated or Turbocharged.

J. Governor: Adjustable isochronous, with speed sensing.

K. Mounting Frame: Structural steel framework to maintain alignment of mounted components without depending on concrete foundation. Provide lifting attachments sized and spaced to prevent deflection of base during lifting and moving.

L. Nameplates: For each major system component to identify manufacturer's name, model and serial number of component.

M. Engine Generator Performance:

1. Steady-State Voltage Operational Bandwidth: 3 percent of rated output voltage from no load to full load.
2. Transient Voltage Performance: Not more than 10.00 percent variation for 50 percent step-load increase or decrease at unity power factor. Voltage shall recover and remain within the steady-state operating band within three seconds.
3. Steady-State Frequency Operational Bandwidth: 0.5 percent of rated frequency from no load to full load.
4. Steady-State Frequency Stability: When system is operating at any constant load within the rated load, there shall be no random speed variations outside the steady-state operational band and no hunting or surging of speed.
5. Transient Frequency Performance: Less than 3.0 Hertz variation for 50 percent step-load increase or decrease at unity power factor. Frequency shall recover and remain within the steady-state operating band within five seconds.
6. Output Waveform: At no load, harmonic content measured line to line or line to neutral shall not exceed 5 percent total and 3 percent for single harmonics. Telephone influence factor, determined in accordance with NEMA MG 1, shall not exceed 50 percent.
7. Sustained Short-Circuit Current: For a three-phase, bolted short circuit at system output terminals, system shall supply a minimum of 300 percent of rated full-load current for not less than 10 seconds and then clear the fault automatically, without damage to generator system components.
8. Start time to comply with NFPA system requirements.

2.4 ENGINE PERFORMANCE

A. Fuel: Natural gas shall be "pipeline grade" meeting the following conditions:

1. Methane number 80 or greater.

2. High heating value shall be within the range of 950 - 1,150 BTU/scf.
3. Hydrogen sulfide shall not exceed 0.3 g/100 scf.
4. Total sulfur shall not exceed 20 g/100 scf.
5. Water vapor content shall not exceed 0.32 g/100 scf.

B. Rated Engine Speed: 1800 rpm.

C. Lubrication System to be engine mounted.

1. Oil filter shall be engine-mounted replaceable cartridge type with integral bypass valve, in accordance with manufacturer recommendations.
2. Thermostatic Control Valve: Control flow in system to maintain optimum oil temperature. Unit shall be capable of full flow and is designed to be fail-safe.
3. Crankcase Drain: Arranged for complete gravity drainage to an easily removable container with no disassembly and without use of pumps, siphons, special tools, or appliances.

D. Jacket Coolant Heater: Jacket water heater shall be sized per NFPA110 and UL listed to ensure that genset will start within the specified time period and ambient conditions.

E. Integral Cooling System: Closed loop, liquid cooled, with radiator factory mounted on engine generator set mounting frame and integral engine-driven coolant pump.

1. Coolant: Solution of 50 percent ethylene-glycol-based antifreeze and 50 percent water, with anticorrosion additives as recommended by engine manufacturer.
2. Expansion Tank: Constructed of welded steel plate and rated to withstand maximum closed-loop coolant system pressure for engine used. Equip with gauge glass and petcock.
3. Temperature Control: Self-contained, thermostatic-control valve modulates coolant flow automatically to maintain optimum constant coolant temperature as recommended by engine manufacturer.
4. Maximum Ambient Operating Temperature on Radiator: 104 degrees F (40 degrees C).
5. Coolant Hose: Flexible assembly with inside surface of nonporous rubber and outer covering of aging-, UV-, and abrasion-resistant fabric.

    a. Rating: 50-psig (345-kPa) maximum working pressure with coolant at 180 deg F (82 deg C), and noncollapsible under vacuum.
    b. Meets SAE 100R1A Type S, EN853 1SN, ISO 1436-1 Type 1SN
    c. a Fittings: Flanges or steel pipe nipples with clamps to suit piping and equipment connections.

F. Muffler/Silencer:

1. Critical type, sized as recommended by engine manufacturer and selected with exhaust piping system to not exceed engine manufacturer's engine backpressure requirements.

G. Air-Intake Filter: Heavy duty, engine-mounted air cleaner with replaceable dry-filter element and "blocked filter" indicator.

H. Starting System: 12 or 24-V electric, with negative ground.

1. Cranking Cycle: As required by NFPA 110 for system level specified.
2. Battery: Lead acid, with capacity within ambient temperature range specified in "Performance Requirements" Article to provide specified cranking cycle as required by NFPA 110 for system level specified.
3. Battery-Charging Alternator: Factory mounted on engine with solid-state voltage regulation and 35 minimum continuous rating.
4. Battery Charger: Current-limiting, automatic-equalizing, and float-charging type designed for lead-acid batteries. Unit shall comply with UL 1236 and NFPA 110 Section 5.6.4.6 for Level 1 systems.:
5. Battery Warmer Pads.

2.5 FUEL SYSTEM – NATURAL GAS

A. Comply with NFPA 37.

B. Operating Pressure: 7 inches of water column.

C. Flowrate: Maximum gas flow demand at 100% load: 3180 cubic feet per hour.

D. Provide optional NPT flexible Fuel Line, Ships Loose

2.6 CONTROL AND MONITORING

A. Automatic Starting System Sequence of Operation: When mode-selector switch on the control and monitoring panel is in the automatic position, remote-control contacts in one or more separate automatic transfer switches initiate starting and stopping of engine generator. When mode-selector switch is switched to the on position, engine generator starts. The off position of same switch initiates engine generator shutdown. When engine generator is running, specified system or equipment failures or derangements automatically shut down engine generator and initiate alarms.

B. Manual Starting System Sequence of Operation: Switching on-off switch on the generator control panel to the on position starts engine generator. The off position of same switch initiates engine generator shutdown. When engine generator is running, specified system or equipment failures or derangements automatically shut down engine generator and initiate alarms.

C. Provide minimum run time control set for 15 minutes with override only by operation of a remote emergency-stop switch.

D. Control panel must comply with UL 6200. The controller shall meet ASTM B117 (salt spray test).

E. Remote Connectivity: Controller shall be capable of remote connectivity via RS485]. Remote connectivity shall be provided by a physically separate module that can be secured, access limited, and/or physically removed to restrict and/or completely isolate the generator system from any outside control or monitoring.

F. Connection to Building Management: Provide connections for data transmission of indications to remote data terminals via Modbus.

G. Environmentally Hardened Design: Open circuit boards, edge cards, and PC ribbon cable connections are unacceptable.

H. PCB Construction: Circuit boards with surface-mounted components to provide vibration durability. Circuit boards utilizing large capacitors or heat sinks must utilize encapsulation methods to securely support these components.

I. Configuration:

1. Operating and safety indications, protective devices, basic system controls, and engine gauges shall be grouped in a common control and monitoring panel mounted on the engine generator. Mounting method shall isolate the control panel from engine generator vibration. Panel powered from the engine generator battery.

J. Control and Monitoring Panel:

1. Digital engine generator controller with integrated touch screen, controls, and microprocessor, capable of local and remote control, monitoring, and programming, with battery backup.
2. Instruments: Located on the control and monitoring panel and viewable during operation.

   a. Engine lubricating-oil pressure gauge.
   b. Engine-coolant temperature gauge.

c. DC voltmeter (alternator battery charging).
d. Running-time meter.
e. AC voltmeter, for each phase.
f. AC ammeter, for each phase.
g. AC frequency meter.
h. Generator-voltage adjusting feature.

3. Controls and Protective Devices: Controls, shutdown devices, and common alarm indication, including the following:

a. Cranking control equipment.
b. Run-Off-Auto switch.
c. Control switch not in automatic position alarm.
d. Overcrank alarm.
e. Overcrank shutdown device.
f. Low-water temperature alarm.
g. High engine temperature pre-alarm.
h. High engine temperature.
i. High engine temperature shutdown device.
j. Overspeed alarm.
k. Overspeed shutdown device.
l. Low fuel main tank.

1) Low-fuel-level alarm shall be initiated when the level falls below that required for operation for duration required for the indicated EPSS class.

m. Coolant low-level alarm.
n. Coolant low-level shutdown device.
o. Coolant high-temperature prealarm.
p. Coolant high-temperature alarm.
q. Coolant low-temperature alarm.
r. Coolant high-temperature shutdown device.

s. EPS load indicator.
t. Battery high-voltage alarm.
u. Low cranking voltage alarm.
v. Battery-charger malfunction alarm.
w. Battery low-voltage alarm.
x. Lamp test.
y. Contacts for local and remote common alarm.
z. Remote manual stop shutdown device.
aa. Total engine run hours, non-resettable.
bb. Engine generator metering, including voltage, current, hertz, kilowatt, kilovolt ampere, and power factor.

K. Engine Generator Metering: Comply with Section 260913 "Electrical Power Monitoring and Control."

L. External Alarm & Status Relays: Provide a separate terminal block, factory wired to Form C dry contacts, for each alarm and status condition required by Building Management or other external systems as shown on electrical drawings.

M. Common Remote Panel with Common Audible Alarm: Include necessary contacts and terminals in control and monitoring panel. Remote panel shall be powered from the engine generator battery.

N. Remote Alarm Annunciator: An LED indicator light labeled with proper alarm conditions shall identify each alarm event, and a common audible signal shall sound for each alarm condition. Silencing switch in face of panel shall silence signal without altering visual indication. Connect so that after an alarm is silenced, clearing of initiating condition will reactivate alarm until silencing switch is reset. Cabinet and faceplate are surface mounting type to suit mounting conditions indicated.

1. Overcrank alarm.
2. Low water-temperature alarm.
3. High engine temperature pre-alarm.
4. High engine temperature alarm.
5. Low lube oil pressure alarm.
6. Overspeed alarm.
7. Low fuel main tank alarm.
8. Low coolant level alarm.
9. Low cranking voltage alarm.
10. Contacts for local and remote common alarm.
11. Audible-alarm silencing switch.
12. Air shutdown damper when used.
13. Run-Off-Auto switch.
14. Control switch not in automatic position alarm.
15. Fuel tank derangement alarm.
16. Fuel tank high-level shutdown of fuel supply alarm.
17. Lamp test.
18. Low-cranking voltage alarm.
19. Generator overcurrent-protective-device not-closed alarm.

O. Remote Emergency-Stop Switch: Provide remote emergency stop switch (Red Mushroom-Type, Exterior Surface Mount). Electrical contractor to coordinate exact location with engineer and local AHJ. Ships loose for field mounting.

P. Engine Run Relay: The generator set shall be provided with a run relay which shall provide a double-pole, double-throw relay with 10-amp/ 250 VAC contacts to indicate that the generator is running. The run relay dry contacts can be used for energizing or de-energizing customer devices while the generator is running (e.g. louvers, indicator lamps, etc.)

Q. Data Logging:

1. Event Logging – the controller keeps a record of up to 8,000 events with date and time locally for warning and shutdown faults. This event log can be downloaded onto a USB storage device or onto a PC through the service program.
2. Event Snapshot – the control system shall capture 15 seconds of critical data around the time a fault or warning. This data shall be viewable on the controller and downloadable.
3. Data Logging – the controller shall allow customized parameters to be logged based on a start trigger from the controller interface.

   a. The parameters are selectable from all monitored parameters.
   b. The sample period shall be configurable from 1 second to 1 day.
   c. The collected data shall be stored on a USB storage device plugged into the control panel.

2.7 GENERATOR OVERCURRENT AND FAULT PROTECTION

A. Overcurrent protective devices shall be coordinated to optimize selective tripping when a short circuit occurs.

1. Overcurrent protective devices for the entire EPSS shall be coordinated to optimize selective tripping when a short circuit occurs. Coordination of protective devices shall consider both utility and EPSS as the voltage source.
2. Overcurrent protective devices for the EPSS shall be accessible only to authorized personnel.

B. Generator Overcurrent Protective Device:

1. Unit mounted circuit breakers. Rating, ampacity, accessories, as shown on drawings or as listed below:
   a. 800 amp @ 208V/3-phase
2. Molded-case circuit breaker, electronic-trip type; Adjustable 80-95 percent rated; complying with UL 489:
   a. Tripping Characteristics: Adjustable long-time and short-time delay and instantaneous.
   b. Trip Settings: Selected to coordinate with generator thermal damage curve.
   c. Shunt Trip: Connected to trip breaker when engine generator is shut down by other protective devices.
   d. Mounting: Adjacent to, or integrated with, control and monitoring panel.

C. Generator Controller Integrated Alternator Protective Functions:

1. Short-time I^2t function : Generator controller-based function shall continuously monitor current level in each phase of alternator output, integrate alternator heating effect over time, and predict when thermal damage of alternator will occur. As overcurrent heating effect on the alternator approaches the thermal damage point of the unit, protector switches the excitation system off, opens the generator disconnect device, and shuts down the engine generator. When signaled by generator protector or other engine generator protective devices, a shunt-trip device in the generator disconnect switch shall open the switch to disconnect the generator from load circuits.
2. Long-time function: Initiates a generator overload alarm when generator has operated at an overload equivalent to 110 percent of full-rated load for 60 seconds. Indication for this alarm is integrated with other engine generator malfunction alarms. Contacts shall be available for load shed functions.
3. Short-circuit fault clearing: Under single- or three-phase fault conditions, regulates generator to 300 percent of rated full-load current for up to 10 seconds.
4. Senses clearing of a fault by other overcurrent devices and controls recovery of rated voltage to avoid overshoot.
5. Ground Fault Indication: Comply with NFPA 70, "Emergency System" signals for ground fault. Indicate ground fault with other engine generator alarm indications.
6. Ground Fault Protection: Comply with NFPA 70, section 215 "Feeder Ground-Fault Protection of Equipment". When configured for ground fault protection; trip generator protective device(s) on ground fault."
7. Arc Flash Energy Reduction: Comply with NFPA 70 Article 240.87 for Arc Energy Reduction for circuit breakers 1200A and greater. Energy-reducing maintenance switch with local status indicator. Instantaneous override that is less than the available arcing current.

2.8 GENERATOR, EXCITER, AND VOLTAGE REGULATOR

A. Comply with NEMA MG 1.

B. Drive: Generator shaft shall be directly connected to engine shaft. Exciter shall be rotated integrally with generator rotor.

C. Electrical Insulation: Class H.

D. Stator-Winding Leads: Brought out to terminal box to permit future reconnection for other voltages if required.

E. Range: Provide range of output voltage by adjusting the excitation level.

F. Construction shall prevent mechanical, electrical, and thermal damage due to vibration, overspeed up to 125 percent of rating, and heat during operation at 110 percent of rated capacity. Stator shall be skewed construction to minimize harmonic voltage distortion.

G. Enclosure: Drip proof.

H. Instrument Transformers: Mounted within generator enclosure.

I. Voltage Regulator:

1. Voltage Regulator: Solid-state type, separate from exciter. The digital voltage regulator shall be microprocessor based with fully programmable operating and protection characteristics. The regulator shall maintain steady-state generator output voltage within +/- 0.25% for any constant load between no load and full load. The regulator shall be capable of sensing true RMS. The regulator shall provide an adjustable Volts/Hz slope regulation characteristic in order to optimize voltage and frequency response for site conditions.
2. Alternator Excitation: Permanent Magnet Generator (PMG) shall provide excitation power for optimum motor starting and short circuit performance.
3. The generator must accept rated load in one-step.
4. Calculated Transient Voltage Performance: Motor starting performance and voltage dip determinations shall be based on the complete generator assembly. Voltage dip shall not exceed 3.3 percent based on the largest project block load, as determined by manufacturer's sizing program.
5. System Transient Voltage Performance: Alternator shall be capable of supplying 557 sKVA with a voltage dip not more than 35% at 0.3 starting power factor. Sustained voltage dip data or manufacturer-published SKVA numbers based on unity PF alternator-only dynamometer testing will not be accepted.
6. Calculated Transient Frequency Performance: Transient frequency dip performance shall be based on the complete generator set. Maintain frequency within 1.0 percent based on largest project block load, as determined by manufacturer's sizing program.

J. Strip Heater: Thermostatically controlled unit arranged to maintain stator windings above dew point. The strip heater shall be wired directly to the incoming power distribution panel or load center.

K. Windings: Two-thirds pitch stator winding and fully linked amortisseur winding.

2.9 OUTDOOR ENGINE GENERATOR ENCLOSURE

A. Basis of design is a Sound Level 1.

B. Generator packaged within manufacturer's weather protective, sound attenuated enclosure. Enclosure and generator set shall be UL 2200 Listed as a system.

C. Enclosure Construction: Minimum 14 gauge construction. Roof construction shall be raised-seam, gasket-free interlocking panels. Rivets shall not be used on external painted surfaces. Design shall be rodent resistant.

D. Doors shall be equipped with lift-off pin and sleeve type hinges to allow access to the engine, alternator, and control panel. Hinges shall be adjustable for door alignment. Hinges and all exposed fasteners shall be stainless steel. Each door shall be equipped with minimum 2-point latching mechanism and identical keys. Perimeter of all door openings shall include polyethylene gasket.

E. Upward discharging exhaust hood for engine cooling airflow and exhaust.

F. Engine exhaust silencer mounted within enclosure discharge hood.

G. Enclosure Finish: Electrostatic applied powered paint, baked and finished to manufacturer's specifications. Finish system shall be subjected to the following tests:

1. ASTM D1186 - 87; 2.5+ mil Paint Thickness
2. ASTM D3363 - 92a; Material Hardness
3. ASTM D522 - B; Resistance to Cracking
4. ASTM D3359 - B; Adhesion
5. ASTM B117 D 1654; Resistant to Salt Water Corrosion
6. ASTM D1735 D 1654; Resistant to Humidity
7. ASTM 2794 93 (2004); Impact Resistance
8. SAE J1690 - UV Protection"

H. Enclosure Color: Manufacturer's standard color, or custom color matched based on architect's design with color sample provided to generator manufacturer.

I. Wind Rating: Enclosure shall be constructed to attain basic wind speed rating of 110 MPH; WIF 1.15, Exposure Category "C", Building Classification "Enclosed", Topographic Factor Kzt = 1. Wind Design Pressures: windward, 20.6 lb/ft^2; leeward, -12.9 lb/ft^2; roof, -18.0 lb/ft^2."

J. Snow Load Rating: Minimum 70 pounds per square foot.

K. Engine-Cooling Airflow through Enclosure: Maintain temperature rise of system components within required limits when unit operates at 110 percent of rated load for two hours with ambient temperature at top of range specified in system service conditions.

L. Sound Insulation: Enclosure and air discharge hood completely lined with reflective silver mylar faced sound attenuating closed cell foam that meets UL 94 HF1 standards for flammability (FMVSS 302 test method). Roof sound insulation panels shall include additional mechanical retention.

M. Sound Performance: The engine generator, while operating at full rated load, shall not exceed 77.80 dBA average measured at 23 ft (7 meters) from the engine generator in a free field environment.

N. Louvers: Fixed-engine, cooling-air inlet and discharge. Stormproof and drainable louvers prevent entry of rain and snow.

O. Convenience Outlet: Factory-wired convenience 120v duplex-outlet within enclosure, GFCI.

P. Enclosure Heater: Provide thermostatically controlled space heater factory installed within enclosure designed to maintain minimum internal temperature at 40 deg F (4 deg C).

2.10 VIBRATION ISOLATION DEVICES

A. Elastomeric Isolator Pads: Oil- and water-resistant elastomer or natural rubber, arranged in single or multiple layers, molded with a nonslip pattern and galvanized-steel baseplates of sufficient stiffness for uniform loading over pad area, and factory cut to sizes that match requirements of supported equipment for units with a ratings 750kw or below.

1. Material: Standard neoprene separated by steel shims.

B. Spring Isolators: Freestanding, steel, open-spring isolators with seismic restraint for units with a rating larger than 750kw.

1. Housing: Steel with resilient vertical-limit stops to prevent spring extension due to wind loads or if weight is removed; factory-drilled baseplate bonded to 1/4-inch- (6-mm-) thick, elastomeric isolator pad attached to baseplate underside; and adjustable equipment-mounting and -leveling bolt that acts as blocking during installation.
2. Outside Spring Diameter: Not less than 80 percent of compressed height of the spring at rated load.
3. Minimum Additional Travel: 50 percent of required deflection at rated load.
4. Lateral Stiffness: More than 80 percent of rated vertical stiffness.
5. Overload Capacity: Support 200 percent of rated load, fully compressed, without deformation or failure.
6. Minimum Deflection: 0.5.

C. Vibration isolation devices shall not be used to accommodate misalignments or to make bends.

2.11 SOURCE QUALITY CONTROL

A. Prototype Testing: Factory test engine generator using same engine model, constructed of identical or equivalent components and equipped with identical or equivalent accessories.

1. Tests: Comply with IEEE 115 and with NFPA 110, Level 1 Energy Converters.

B. Project-Specific Equipment Tests: Before shipment, factory test engine generator and other system components and accessories manufactured specifically for this Project. Perform tests at rated load and power factor. Include the following tests:

1. Test components and accessories furnished with installed unit that are not identical to those on tested prototype to demonstrate compatibility and reliability.
2. Test generator, exciter, and voltage regulator as a unit.
3. Full load run.
4. Maximum power.
5. Voltage regulation.
6. Transient and steady-state governing.
7. Single-step load pickup.
8. Safety shutdowns.
9. Report factory test results within 10 days of completion of test.

2.12 FINISHES

A. Indoor and Outdoor Enclosures and Components: Manufacturer's standard finish over corrosion-resistant pretreatment and compatible primer.

PART 3 - EXECUTION *- Installation of the Generator Set will be performed by a licensed Electrical Contractor (E.C.), to be commissioned by the Owner*

3.1 EXAMINATION

A. Examine areas, equipment bases, and conditions, with Installer present, for compliance with requirements for installation and other conditions affecting packaged engine generator performance & installation.

B. Examine roughing-in for piping systems and electrical connections. Verify actual locations of connections before packaged engine generator installation.

C. Proceed with installation only after unsatisfactory conditions have been corrected.

3.2 PREPARATION

A. Interruption of Existing Electrical Service: Do not interrupt electrical service to facilities occupied by Owner or others unless permitted under the following conditions and then only after arranging to provide temporary electrical service in accordance with requirements indicated:

1. Notify Project Manager in advance of proposed interruption of electrical service.
2. Do not proceed with interruption of electrical service without written permission.

B. Electrical Contractor (E.C.) shall coordinate exact location of Generator Set, ATS, Remote Annunciator Panel, and Emergency Stop Switch with the Owner's Rep, Engineer, and local AHJ prior to rough-in.

3.3 INSTALLATION - *Installation of the Generator Set will be performed by a licensed Electrical Contractor (E.C.), to be commissioned by the Owner*

A. Comply with NECA 1 and NECA 404.

B. Comply with packaged engine generator manufacturers' written installation and alignment instructions and with NFPA 110.

C. Equipment Mounting:

1. Install packaged engine generators on cast-in-place concrete equipment bases or steel dunnage as indicated on drawings.
2. Coordinate size and location of mounting bases for packaged engine generators with concrete trades for properly sized/configured concrete pad.
3. Install unit with vibration isolation devices described in section 2.10.

3.4 FIELD QUALITY CONTROL

A. Tests and Inspections: The supplier of the electric generating plant and associated items covered herein shall provide factory certified technicians to inspect the completed installation and to perform an initial startup inspection to include:

1. Ensuring the engine starts (both hot and cold) within the specified time.
2. Verification of engine parameters within specification.
3. Verify no load frequency and voltage, adjusting if required.
4. Test all automatic shutdowns of the engine-generator.
5. Perform a load test of the electric plant, ensuring full load frequency and voltage are within specification by using building load.

B. NFPA 110 Acceptance Tests: Perform tests required by NFPA 110 that are additional to those specified here, including, but not limited to, single-step full-load pickup test.

C. Battery and Charger Tests:

1. Measure charging voltage and voltages between available battery terminals for full-charging and float-charging conditions.
2. Verify that measurements are within manufacturer's specifications."

D. System Integrity Tests: Verify proper installation, connection, and integrity of each element of engine generator system before and during system operation. Check for air, exhaust, and fluid leaks.

E. Coordinate tests with tests for transfer switches and run them concurrently.

F. Operational Test: After electrical circuitry has been energized, start units to confirm proper motor rotation and unit operation for generator and associated equipment.

G. Test and adjust controls and safeties. Replace damaged and malfunctioning controls and equipment.

H. Remove and replace malfunctioning units and retest and reinspect as specified above.

I. Retest: Correct deficiencies identified by tests and observations, and retest until specified requirements are met.

J. Report results of tests and inspections in writing. Record adjustable relay settings and measured insulation resistances, time delays, and other values and observations.

3.5 DEMONSTRATION

A. Generator supplier shall provide services of a factory-authorized service representative to train Owner's maintenance personnel to adjust, operate, and maintain packaged engine generators.

3.6 MAINTENANCE SERVICE

A. Repair Service Capabilities:

1. The generator set supplier shall maintain service parts inventory for the entire power system at a central location which is accessible to the service location 24 hours per day, 365 days per year. The manufacturer of the generator set shall maintain a central parts inventory to support the supplier, covering all the major components of the power system, including: engines, alternators, control systems, paralleling electronics, and power transfer equipment.
2. The generator set shall be serviced by a local service organization that is trained and factory certified in generator set service. The supplier shall maintain an inventory of power system replacement parts in the local service location. Service vehicles shall be stocked with critical replacement parts. The service organization shall be on call 24 hours per day, 365 days per year. The service organization shall be physically located within 50 miles of the site.
3. The manufacturer shall maintain model and serial number records of each generator set provided for at least 20 years.

B. Preventative Maintenance Service Agreement: The supplier shall include as a line item adder in the proposal, a one-year maintenance service agreement. The maintenance shall be performed by factory authorized service technicians capable of servicing both the engine generator set(s) and the transfer switch(es). This agreement shall include semi-annual preventative maintenance visits to verify operation and/or complete the following:

1. All periodic engine maintenance as recommended by the service manual.
2. All electrical controls maintenance and calibrations as recommended by the manufacturer.
3. All auxiliary equipment as a part of the emergency systems.
4. The supplier shall guarantee emergency service.
5. All expendable maintenance items are to be included in this agreement.
6. A copy of this agreement and a schedule shall be provided in the submittal documents, detailing scope of work and preventative maintenance service visit interval.

END OF SECTION

GCS SF3.8_Bid Package #4-BOECC Geneator & ATS Installation Project
NOTE: The Owner has already pre-purchased this Automatic Transfer Switch (ATS) as part of Bid Package #3.
This specification section is being issued for reference with regard to installation of the ATS as part of this Bid Package #4.

SECTION 26 3623

AUTOMATIC TRANSFER SWITCH

PART 1 GENERAL

1.01 SCOPE

A. Furnish & deliver a new Automatic Transfer Switch (ATS), as described herein, to the Owner (Gaylord Community Schools = GGC) at the Board Office Early Childhood Center (BOECC) building located @ 615 South Elm Ave, Gaylord, MI 49735 – Contact Mr. David Parsell @ 989-731-5230.

1. The Owner will be commissioning a licensed Electrical Contractor (E.C.) to install the Generator & ATS.

B. Furnish Automatic Transfer Switch with number of poles, amperage, voltage, and withstand current ratings as shown on the plans and/or as described herein.

C. Basis of design is a Generac TX Series Service Entrance Rated Automatic Transfer Switch, Open - Delayed/Programmed Transfer (3 position), 800 A, 3 Pole 4 Wire 208V, Transfer Switch in a NEMA 3R Enclosure. Automatic transfer shall consist of a mechanically held power transfer switch unit and a microprocessor controller, interconnected to provide complete automatic operation. All transfer switches and control panels shall be the product of the same manufacturer.**1.02 ACCEPTABLE MANUFACTURERS**

A. Basis of Design Automatic transfer switches shall be Generac TX Series.

B. Any alternative to the Basis of Design shall be submitted to the consulting engineer in writing at least 10 days prior to bid. Each alternate bid must list any deviations from this specification.

1.03 CODES AND STANDARDS

A. The automatic transfer switches and accessories shall conform to the requirements of:

1. UL 1008 - Standard for Automatic Transfer Switches
2. NFPA 70 - National Electrical Code (2017 version and later for start circuit monitoring)
3. NEC Articles 700, 701, 702, 708
4. NFPA 99 – Health Care Facilities
5. NFPA 110 – Emergency and Standby Power Systems
6. IEEE Standard 446 – IEEE Recommended Practice for Emergency and Standby Power Systems for Commercial and Industrial Applications
7. NEMA Standards ICS10, MG1, MG250, ICS6, AB1
8. ANSI C62.41
9. International Standards Organization: ISO 8528, 9001.
10. Where seismic rating and/or certification is required: IBC 2018, OSHPD

1.04 RELATED REQUIREMENTS:

A. Section 263213 "Packaged Spark Ignited Engine Generator Set" for the Generator Set also being Pre-Purchased by the Owner for installation by E.C.

1.05 SUBMITTALS:

A. Product Data: Provide catalog sheets showing voltage, switch size, ratings and size of switching and overcurrent protective devices, operating logic, short circuit ratings, dimensions, and enclosure details.

B. Manufacturer's Instructions: Indicate application conditions and limitations of use stipulated by product testing agency. Include instructions for storage, handling, protection, examination, preparation, and installation of product.

C. Operation Data: Instructions for operating equipment under emergency conditions when engine generator is running.

D. Maintenance Data: Routine preventative maintenance schedule. List special tools, maintenance materials, and replacement parts.

1.06 FACTORY SERVICES:

A. The transfer switch manufacturer shall perform a complete operational test on the transfer switch prior to shipping from the factory. A certified test report shall be available on request. Test process shall include calibration of voltage sensors

B. Manufacturer’s representative/supplier shall provide startup assistance to the Owner’s E.C. installer and also Owner Training to the Owner after substantial completion installation by E.C.

C. Manufacturer’s representative/supplier shall provide Maintenance Service agreement for Service and Maintenance of the Automatic Transfer Switch to the Owner for one (1) – year from date of substantial completion installation by E.C.

PART 2 PRODUCTS

2.01 MECHANICALLY HELD TRANSFER SWITCH

A. The basis of design is the Generac TX Series Transfer switch that utilities a knife blade mechanically latching design with maintenance free contacts. The transfer switch unit shall be electrically operated and mechanically held. The open transition switch shall be mechanically interlocked to ensure only one of two possible positions, normal or emergency. The delayed transition switch shall be mechanically interlocked to ensure one of three possible positions, normal and emergency.

B. The switch shall be positively locked and unaffected by momentary outages so that contact pressure is maintained at a constant value and temperature rise at the contacts is minimized for maximum reliability and operating life.

C. All main contacts shall be silver composition. Switches shall have segmented blow-on construction for high withstand current capability and be protected by separate arcing contacts.

D. A manual operating handle shall be provided for maintenance purposes.

E. Designs utilizing components of or parts thereof which are not intended for continuous duty, repetitive switching, or transfer between two active power sources are not acceptable.

F. Where neutral conductors must be switched, the ATS shall be provided with fully rated neutral transfer contacts.

G. Where neutral conductors are to be solidly connected, a neutral terminal plate with fully rated AL-CU pressure connectors shall be provided.

H. The switch shall be capable of the following methods of transfer: Open with In-Phase transition only, Time Delay in Neutral transition, or In-Phase transition with a default to Time Delay in Neutral.

I. The transfer switch shall have a Seismic Certification to the requirements of the international Building Code of electrical equipment.

2.02 ATS CONTROL WITH INTEGRATED USER INTERFACE PANEL

A. The basis of design is the Generac TXC-100 Controller with Integrated User Interface Panel which is voltage agnostic for service purposes removing the need for technicians to carry and support control panels for every available voltage. Any manufacturers that provide a controller or control panel that does not meet this requirement should notify the consulting engineer before bidding.

B. The controller shall be connected to the transfer switch by an interconnecting wiring harness. The harness shall include a keyed disconnect plug to enable the controller to be disconnected from the transfer switch for routine maintenance.

C. The controller shall direct the operation of the transfer switch. The controller's sensing and logic shall be controlled by a built-in microprocessor for maximum reliability, minimum maintenance, and include standard on-board serial communications capability.

D. A user accessible USB port shall be provided to facilitate firmware updates, uploading of switch operational parameters, downloading of event history and switch operational statistics. This USB port shall be front accessible without opening the ATS door.

E. The controller shall provide single and three phase capability for maximum application flexibility and minimal spare part requirements. Voltage sensing shall be true RMS type and shall be accurate to ± 1% of nominal voltage. Frequency sensing shall be accurate to ± 0.1Hz. Time delay settings shall be accurate to ±0.5% of the full-scale value of the time delay. The panel shall be capable of operating over a temperature range of -20 to + 70 degrees C.

F. The controller power supply shall be field-configurable to operate on 120V through 480V systems without the need for transformers.

G. Control logic shall be backed up with a rechargeable, user-replaceable lithium-ion battery that shall also maintain control power for up to 60 minutes in the event no source power is available.

H. The controller shall be enclosed with a protective cover and be mounted separately from the transfer switch unit for safety and ease of maintenance.

I. The controller shall meet or exceed the requirements for Electromagnetic Compatibility (EMC) as follows:

1. IEC 61000 – 4 – 3 Radiated RF Field Immunity
2. IEC 61000 – 4 – 4 Electrical Fast Transient/Burst Immunity
3. IEC 61000 – 4 – 5 Surge Immunity
4. IEC 61000 – 4 – 6 Conducted RF Immunity
5. IEC 61000 – 4 -11 Voltage Dips and Interruptions
6. EN 61000 – 6 - 2 Industrial Immunity Requirements EN 61000-6-4 - Radiated Emissions
7. EN 61000 – 6 - 4 Conducted Emissions
8. CISPR 11 – Conducted RF Emissions and Radiated RF Emissions

2.03 ENCLOSURE

A. The basis of design is a Generac TX Series Service Entrance Rated Transfer Switch in a NEMA 3R enclosure, with dimensions no larger than 89.8 Inches in Height, 38 Inches in Width, and 24.5 Inches In Depth. Larger enclosures than the basis of design will need to be approved by the Consulting Engineer to ensure there is enough wall space and appropriate clearance.Provide a temperature and humidity controlled anti-condensation heater for all NEMA 3R and 4X enclosed units. Heater cover to indicate a hot surface.

2. The switch mechanism and controller shall be easily removable from the enclosure in the field. This requirement will facilitate easy single-person installation on wall mounted switches, conduit fitting, and

cable pulling while minimizing risk of damage and/or contamination of ATS components during the installation process.

3. Controller human interface and USB port shall be visible and operational through the enclosure door, without the need for personal protective equipment, avoiding arc-flash hazard for routine checks of the controller status.

PART 3 OPERATIONS

3.01 CONTROLLER DISPLAY AND KEYPAD

A. A backlit four-line graphical LCD display and human interface shall be an integral part of the controller for viewing all available data and setting desired operational parameters. Operational parameters shall also be available for viewing and limited control through the RS-485 communications port.

B. All instructions and controller settings shall be easily accessible, readable, and accomplished without the use of codes, calculations, or instruction manuals.

C. The user interface shall be provided with test/reset modes. The test mode will simulate a normal source failure. The reset mode shall bypass the time delays on either transfer to emergency or retransfer to normal.

D. The following parameters shall only be adjustable only by authorized service personnel:

1. Nominal line voltage and frequency
2. Single or three phase sensing on normal
3. Transfer operating mode configuration, (open transition, or delayed transition)

3.02 VOLTAGE AND FREQUENCY SENSING

A. Voltage and frequency on both the normal and emergency sources (as noted below) shall be continuously monitored, with the following pickup, dropout, and trip settings capabilities; values shown as percentage of nominal unless otherwise specified.

Voltage and Frequency Settings	Range	Default Value
Source 1 (Normal) is Genset	Yes or No	No
Source 1 Undervoltage Dropout	50-97%	85%
Source 1 Undervoltage Pickup	52-99%	90%
Source 1 Overvoltage Dropout	105-120%	110%
Source 1 Overvoltage Pickup	103-118%	105%
Source 1 Underfrequency Dropout	90-97%	90%
Source 1 Underfrequency Pickup	91-99%	95%

Source 1 Overfrequency Dropout	103-110%	105%
Source 1 Overfrequency Pickup	101-109%	102%
Source 1 Voltage Imbalance Drop	5-20%	5%
Source 1 Voltage Imbalance Pickup	3-18%	3%
Source 1 Warmup Time	0-1800s	3s
Source 1 Cooldown Time	0-1800s	1800s
Source 1 Minimum Run Time	300-1800s	1200s
Source 2 is Generator	Yes or No	Yes
Source 2 Undervoltage Dropout	50-97%	85%
Source 2 Undervoltage Pickup	52-99%	90%
Source 2 Overvoltage Dropout	105-120%	110%
Source 2 Overvoltage Pickup	103-118%	105%
Source 2 Underfrequency Dropout	90-97%	90%
Source 2 Underfrequency Pickup	91-99%	99%
Source 2 Overfrequency Dropout	103-110%	105%
Source 2 Overfrequency Pickup	101-109%	102%
Source 2 Voltage Imbalance Drop	5-20%	5%
Source 2 Voltage Imbalance Pickup	3-18%	3%
Source 2 Minimum Run Time	300-1800s	1200s
Source 2 Warmup Time	0-1800s	3s
Source 2 Cooldown Time	0-1800s	1800s
Phase Rotation Check	ABC, CBA, OFF	ABC
Supply Overvoltage	350 VAC	Fixed
Manual Return to Normal	Yes or No	
Time Delay Settings		
Transfer to Emergency	120s max	30s
Re-transfer to Normal	1,800s max	1,800s

Time Delay Neutral	120s max	30s
Engine Cool Down	300-1,800s	1,800s
Delayed Transition Time	120s max	120s
Elevator Signal	120s max	30s
In Phase Transfer	Yes or No	
In Phase Synchronization	Time 60-3600s	300s
Preferred Source	S1, S2	S1
Voltage Imbalance Enable	Yes or No	
Voltage Imbalance Timeout	10-30s max	20s

B. Repetitive accuracy of all settings shall be within 1% at +25C.

C. Voltage and frequency settings shall be field adjustable in 1% increments either locally with the display and keypad or remotely via RS-485 communications port access.

D. Source status screens shall be provided for both normal & emergency to provide digital readout of voltage and frequency.

E. The backlit graphical display shall have multiple language capability. Languages can be selected from the user interface.

3.03 TIME DELAYS

A. A **Line Interrupt** delay shall be provided to override momentary normal source outages, delay all transfer and engine starting signals; adjustable 0 to 120 seconds. It shall be possible to bypass the time delay from the controller user interface.

B. An **Engine Warm Up** delay shall be provided for extended engine RPM stabilization where fast transfer to the emergency source is not required; adjustable 0 to 1,800 seconds. It shall be possible to bypass the time delay from the controller user interface.

C. A **Transfer to Emergency** delay shall be provided for controlled sequencing of loads to the emergency source; adjustable from 0 to 120 seconds. It shall be possible to bypass the time delay from the controller user interface.

D. A **Retransfer to Normal** delay shall be provided to ensure stability of the normal source, adjustable from 0 to 1,800 seconds. Time delay shall be automatically bypassed if the emergency source fails and normal source is acceptable.

E. An **Engine Minimum Runtime** delay shall be provided to reduce nuisance starts when the normal source power is unstable but does not trigger a transfer to the emergency source, adjustable from 5 to 30 minutes. Operates in conjunction with Engine Cool Down delay.

F. An **Engine Cool Down** delay shall be provided; adjustable 300 – 1,800 seconds.

G. A **Delayed Transition** delay shall be provided to ensure sufficient time for motor voltage decay for transition between live sources; adjustable from 0 – 120 seconds.

H. An **Elevator Signal Before Transfer** output signal shall be provided to drive an external relay for selective load disconnect control. The controller shall have the ability to activate an adjustable 0 to 120 second delay in any of the following modes:

1. Prior to transfer only.
2. Prior to and after transfer.
3. Normal to emergency only.
4. Emergency to normal only.
5. Normal to emergency and emergency to normal.
6. All transfer conditions or only when both sources are available.

I. For special applications (i.e., three sources), the option to select the **Preferred Source**.

J. All adjustable time delays shall be field adjustable without the use of special tools or software.

TIME DELAY SUMMARY TABLE:

Time Delay Description	Range	Default Value
Line Interrupt Delay	0 – 120 sec.	3 sec.
Engine Warm Up Delay	0 – 1,800 sec.	3 sec.
Transfer to Emergency	0 – 120 sec.	3 sec.
Retransfer to Normal	0 – 1,800 sec.	1,800 sec.
Engine Minimum Run Time	5 – 30 min.	5 min.
Engine Cool Down	300 – 1,800 sec.	1,800 sec.
Delayed Transition (Center Off Position)	0 – 120 sec.	120 sec.
Elevator Signal Before Transfer	0 – 120 sec.	0 sec.
Preferred Source	Normal (S1), Emerg. (S2)	Normal (S1)

3.04 EXTERNAL CONTROL INTERFACES AND INDICATORS

A. Communications connectors, user interface and display shall be accessible and usable without presenting an arc-flash hazard.

B. Customer inputs shall be optically isolated for wider compatibility with external systems. This will protect the controller from external surges and transient voltages.

C. Surge Protection for the ATS controls shall be provided.

D. Replaceable fuses to protect the power supply to the ATS control panel.

E. A set of contacts rated 5 amps, 30 VDC shall be provided for a low-voltage **engine start** signal. The start signal shall prevent dry cranking of the engine by requiring the generator set to reach proper output and run for the duration of the Engine Minimum Runtime setting, regardless of whether the normal source restores before the load is transferred.

F. Engine starting contacts shall facilitate start-circuit monitoring to comply with the 2017 and later versions of NFPA 70 Article 700.10 (D)(3).

G. Four (4) sets of Form-C auxiliary contacts rated 10 amps, 250 VAC shall be provided to indicate the switch actuator position, including center-off for Time Delay Neutral switches or a Permissive (Emergency Inhibit) condition.

H. A single **General Alarm** (summary alarm) indication shall light up the alert indicator and de-energize the configured common alarm output relay for external monitoring.

I. LED indicating lights shall be provided; one to indicate when the ATS is connected to the normal source and one to indicate when the ATS is connected to the emergency source.

J. LED indicating lights shall be provided and energized by controller outputs. The lights shall provide true source availability of the normal and emergency source, as determined by the voltage sensing trip and reset settings for each source.

K. LED indicating light shall be provided to indicate switch not in automatic mode (manual).

L. LED indicating light shall be provided to indicate any alarm condition.

M. The controller shall have two programmable inputs and one programmable output as standard; with an optional expansion board to add up to four programmable input/outputs. Programmable I/O conditions shall include:

Programmable Output	Programmable Input
Source 1 – Two Wire Start	Permissive (Emergency Inhibit)
Source 2 – Two Wire Start	Remote Engine Fast Test
Engine Exercising	Remote Engine Normal Test
Engine Warmup	ATS Timer
Signal Before Transfer	Initiate Demand Response
General Alarm	
Source 1 Good	
Source 2 Good	

N. System Status - The controller LCD display shall include a System Status screen which shall be accessible from any point in the menu system by depressing the “ESC” key until you arrive at the System Status screen. This screen shall display a clear description of the active operating sequences and switch position. Operational status information displayed shall include:

1. Source 1 status (good or bad)
2. Source 2 status (good or bad)
3. Any active timer
4. Permissive (Emergency Inhibit when active)

3.05 Transfer and Exercise Controls

A. The following standard features shall be built into the controller, capable of being activated through keypad programming as required by the user:

1. Provide the ability to select “commit/no commit to transfer” to determine whether the load should be transferred to the emergency generator if the normal source restores before the generator is ready to accept the load.
2. An engine generator exercising timer shall be provided to configure daily, day of week, weekly, bi-weekly, or monthly testing of an engine generator set at a specified time of day with or without load for a programmable period (Engine Minimum Runtime).
3. Terminals shall be provided for a remote contact to signal the ATS to transfer to emergency for remote test. Test signal can be enabled through the keypad or digital input. Transfer to emergency for demand response can be enabled by digital input.
4. **For In-Phase Transfer Switch Designs:** An in-phase monitor shall be provided in the controller such that the transfer occurs with less than ten degrees phase angle difference between sources. The monitor shall

control transfer so that motor load inrush currents do not exceed normal starting currents and shall not require external control of power sources. In-phase switch transfer time shall not exceed 25ms.

5. **For Delayed Transition Transfer Switch Designs:** Terminals shall be provided for a remote contact to signal the ATS to load-shed (Permissive is removed) and move to a center-off position. When the load-shed signal is removed (Permissive is restored), the ATS shall reclose to the emergency. If normal source is good during load-shed the ATS shall transfer to and remain on normal source.

3.06 DATA LOGGING AND DIAGNOSTICS

A. Controllers that require multiple screens to determine system status or display “coded” system status messages, which must be explained by references in the operator’s manual are not permissible.

1. Controller & Contactor Health Monitoring with visual and auxiliary contact status shall be provided.
2. Communications Interface – The controller shall be capable of interfacing, through a standard RS-485 serial communication port with a network of transfer switches.
3. Data Logging – The controller shall have the ability to log data and to maintain the last 200 events, even in the event of total power loss. The following events shall be time and date stamped and maintained in a non-volatile memory:
   a. Date, time and reason for transfer normal to emergency.
   b. Date, time and reason for transfer emergency to normal.
   c. Date, time and reason for engine start.
   d. Date and time engine stopped.
   e. Date and time emergency source available.
   f. Date and time emergency source not available.

PART 4 ADDITIONAL FEATURES AND ACCESSORIES

4.01 ADDITIONAL OPTIONAL FEATURES

A. Line Interrupt Time Delay. An extended time delay on engine starting shall be provided. Adjustable from 0 to 120 seconds. Default set at 3 seconds.

B. Integrated Metering with current transformers. Three phase ammeter with selector switch (with current transformers and shorting blocks) shall be provided

C. Manual Retransfer to Generator. - Not Selected

D. Permissive (Emergency Inhibit). - Not Selected

E. Chicago Toolkit. - Not Selected

F. Expanded Input/Output Module. Expandable Input/Output Board Module Includes: 4 Relay Outputs and 4 Optically Isolated Inputs.

G. Pad lockable controller cover (Standard on NEMA 3R). Pad lockable user interface cover shall be provided with the ability to protect the user interface from the environment

H. Temperature and Humidity Controlled Heater for NEMA 1. An enclosure heater strip shall be supplied inside the transfer switch enclosure and shall be controlled by an adjustable humidistat.

I. Transient Voltage Surge Suppressor – A TVSS shall be provided with a surge current rating of 80ka per phase, high-performance EMI/RFI filtering, LED status indication via solid state diagnostics plus remote indication

contacts, built-in audible alarm, thermal and short circuit fusing and a short circuit current rating: 200k AIC, UL 1449 3rd Edition Listed, UL1449 Type 2 SPD, In=20kA.

J. Remote Annunciator – Shipped Loose for installation/wiring by Electrical Contractor (E.C.). E.C. shall coordination location of Remote Annunciator with Owner's Rep, Engineer, AHJ prior to rough-in.

PART 5 ADDITIONAL REQUIREMENTS

5.01 WITHSTAND AND CLOSING RATINGS

A. The ATS shall be rated to close on and withstand the available RMS symmetrical short circuit current at the ATS terminals with the type of overcurrent protection shown on the plans. The basis of design for this project is a Generac TX Series Service Entrance Rated Automatic Transfer Switch with a 125kaic WCR Breaker Rating transfer switches from other manufacturers with ratings less than provided in this section will need to be approved by the Consulting Engineer to ensure compatibility with the project.

B. Provide a temperature and humidity controlled anti-condensation heater for all NEMA 3R and 4X enclosed units. Heater cover to indicate a hot surface.

C. The switch mechanism and controller shall be easily removable from the enclosure in the field. This requirement will facilitate easy single-person installation on wall mounted switches, conduit fitting, and cable pulling while minimizing risk of damage and/or contamination of ATS components during the installation process.

D. Controller human interface and USB port shall be visible and operational through the enclosure door, without the need for personal protective equipment, avoiding arc-flash hazard for routine checks of the controller status.

5.02 TESTS AND CERTIFICATION

A. The complete ATS shall be factory tested to ensure proper operation of the individual components and correct overall sequence of operation and to ensure that the operating transfer time, voltage, frequency, and time delay settings are in compliance with the specification requirements.

B. The ATS manufacturer shall be certified to ISO 9001: 2015 International Quality Standard and the manufacturer shall have third party certification verifying quality assurance in design/development, production, installation, and servicing in accordance with ISO 9001: 2015.

5.03 SERVICE REPRESENTATION

A. The ATS manufacturer shall support a service organization of company-employed personnel located throughout the contiguous United States. The service center's personnel must be factory trained and must be on call 24 hours a day, 365 days a year.

B. The manufacturer shall maintain records of switch shipments, by serial number, for a minimum of 10 years.

5.04 WARRANTY

A. The basis of design is a Generac TX Series Service Entrance Rated Automatic Transfer Switch Comprehensive 2 Year Warranty.

B. A Basic Warranty is defined as the manufacturer covering replacement parts for the listed amount of the warranty period.

C. The Comprehensive Warranty is defined as the manufacturer covering replacement parts, labor, and limited technician travel costs for covered warranty repairs during the listed warranty period.

D. The switch mechanism and controller shall be easily removable from the enclosure in the field. This requirement will facilitate easy single-person installation on wall mounted switches, conduit fitting, and cable pulling while minimizing risk of damage and/or contamination of ATS components during the installation process.

E. Controller human interface and USB port shall be visible and operational through the enclosure door, without the need for personal protective equipment, avoiding arc-flash hazard for routine checks of the controller status.

PART 6 - EXECUTION *- Installation of the ATS will be performed by a licensed Electrical Contractor (E.C.), to be commissioned by the Owner*

6.01 EXAMINATION

A. Examine areas, equipment bases, and conditions, with Installer present, for compliance with requirements for installation and other conditions affecting ATS performance & installation.

B. Examine roughing-in for piping systems and electrical connections. Verify actual locations of connections before ATS installation.

C. Proceed with installation only after unsatisfactory conditions have been corrected.

6.02 PREPARATION

A. Interruption of Existing Electrical Service: Do not interrupt electrical service to facilities occupied by Owner or others unless permitted under the following conditions and then only after arranging to provide temporary electrical service in accordance with requirements indicated:

1. Notify Project Manager in advance of proposed interruption of electrical service.
2. Do not proceed with interruption of electrical service without written permission.

B. Electrical Contractor (E.C.) shall coordinate exact location of Generator Set, ATS, Remote Annunciator Panel, and Emergency Stop Switch with the Owner's Rep, Engineer, and local AHJ prior to rough-in.

6.03 INSTALLATION *- Installation of the ATS will be performed by a licensed Electrical Contractor (E.C.), to be commissioned by the Owner.*

A. Comply with NECA 1.

B. Comply with ATS manufacturers' written installation and alignment instructions and with NFPA 110.

C. Equipment Mounting:

1. Install ATS on cast-in-place concrete equipment bases as indicated on drawings.
2. Coordinate size and location of mounting bases, and conduit entrys, for ATS & Remote Annunciator, with concrete trades for properly sized/configured concrete pad.

6.04 FIELD QUALITY CONTROL

A. Tests and Inspections: The supplier of the ATS and associated items covered herein shall provide factory certified technicians to inspect the completed installation and to perform an initial startup inspection to include:

1. Ensuring the ATS transfers within the specified time.
2. Verification of ATS parameters within specification.

B. Coordinate tests with tests for generator and run them concurrently.

C. Test and adjust controls and safeties. Replace damaged and malfunctioning controls and equipment.

D. Remove and replace malfunctioning units and retest and reinspect as specified above.

E. Retest: Correct deficiencies identified by tests and observations, and retest until specified requirements are met.

F. Report results of tests and inspections in writing. Record adjustable relay settings and measured insulation resistances, time delays, and other values and observations.

6.05 DEMONSTRATION

A. ATS supplier shall provide services of a factory-authorized service representative to train Owner's maintenance personnel to adjust, operate, and maintain ATS.

6.06 MAINTENANCE SERVICE

A. Repair Service Capabilities:

1. The ATS supplier shall maintain service parts inventory for the entire power system at a central location which is accessible to the service location 24 hours per day, 365 days per year.
2. The ATS shall be serviced by a local service organization that is trained and factory certified in generator set service. The supplier shall maintain an inventory of power system replacement parts in the local service location. Service vehicles shall be stocked with critical replacement parts. The service organization shall be on call 24 hours per day, 365 days per year. The service organization shall be physically located within 50 miles of the site.
3. The manufacturer shall maintain model and serial number records of each ATS provided for at least 20 years.

B. Preventative Maintenance Service Agreement: The supplier shall include as a line item adder in the proposal, a one-year maintenance service agreement. The maintenance shall be performed by factory authorized service technicians capable of servicing both the engine generator set(s) and the transfer switch(es). This agreement shall include semi-annual preventative maintenance visits to verify operation and/or complete the following:

1. All periodic engine maintenance as recommended by the service manual.
2. All electrical controls maintenance and calibrations as recommended by the manufacturer.
3. All auxiliary equipment as a part of the emergency systems.
4. The supplier shall guarantee emergency service.
5. All expendable maintenance items are to be included in this agreement.
6. A copy of this agreement and a schedule shall be provided in the submittal documents, detailing scope of work and preventative maintenance service visit interval.

END OF SECTION

From GCS-SF3.8-BP#3_0-24-1054_MEMYc-BOECC_Revised_Submittal_2-10-2025_(Revised/Approved Generator & ATS shop drawing submittal dated 2-10-2025 - *For Reference to BP#4 Installation Only*)

BOECC

2/10/2025 (REVISED)

GENERATOR SYSTEM SUBMITTAL PACKAGE FOR REVIEW / APPROVAL

Matt Everhard
(616) 822-3663

Wolverine Power Systems
615 Expressway Court
Gaylord, Michigan 49735

QUOTE #: 24-1054 MEMYc 1/21/2025

BILL OF MATERIALS:

Quantity 1 - Generac Industrial Gaseous Engine Driven Generator, Turbocharged/Aftercooled 6 Cylinder 14.2L Engine, Consisting of the Following Features and Accessories:

- Stationary Emergency Standby Rated
- 250 kW Rating, Wired for 120/208 VAC, Three Phase, 60 Hz
- Natural Gas Fuel System
- Permanent Magnet Excitation
- UL2200 Listed
- Level 1 Acoustic Steel Enclosure with Industrial Grey Baked On Powder Coat Finish
    - Enclosure Heater
- Power Zone Digital Control Panel - Meets NFPA 99 and 110 Requirements
    - Temp Range -40 to 70 Degrees C
    - Humidity 2 – 95% (Non Condensing)
    - UL6200 Listed
    - C-ETL-US
    - CE
    - FCC
    - IEC801 (Radiated Emissions, Susceptibility, and Surge Immunity)
    - 7” Resistive Color Touchscreen
        - Built-in Webserver
        - IP65 (front)
        - Auto/Manual/Off Key Switch, Alarm Indication, Not in Auto Indication, Audible Alarm, Emergency Stop Switch
    - Dual Core Digital Microprocessor
        - RS485, Ethernet and CANbus Ports
    - Sensors: Oil Pressure, Optional Oil Temp, Coolant Temp and Level, Fuel Level/Pressure (where applicable), Engine Speed, DC Battery Voltage, Run-time Hours, Generator Voltages, Amps, Frequency, Power, Power Factor
        - Alarm Status: Low or High AC Voltage, Low or High Battery Voltage, Low or High Frequency, Pre-low or Low Oil Pressure, Pre-high or High Oil Temp (optional), Low Water Level and Temp, Pre-high or High Engine Temp, High, Low, and Critical-low Fuel Level/Pressure (where applicable), Overcrank, Over and Under Speed, Unit Not in Automatic
        - Programmable I/O
        - Built-in PLC for Special Applications
    - Engine Function Monitoring and Control:
        - Full Range Standby Operation; Programmable Auto Crank, Emergency Stop, Auto-Off-Manual Switch
        - Isochronous Governor
            - 0.25% Digital Frequency Regulation with: Soft-Start Ramping - Adjustable, Gain - Adjustable, Overshoot Limit - Adjustable
        - 3 Phase RMS Voltage Sensing
            - +/-0.5% digital Voltage Regulation with: Soft-Start Voltage Ramping - Adjustable, Loss of Sensing Protection - Adjustable, Negative Power Limit - Adjustable, Hi/Lo Voltage Limit - Adjustable, V/F Slope and Gain - Adjustable, Fault Protection

This quotation and supporting materials contain confidential and proprietary business information of Wolverine Power Systems and Generac Power Systems. These materials may be printed or photocopied for use in evaluating the proposed project but are not to be shared with other parties outside of your organization.

  - Service Reminders, Trending, Fault History (Alarm Log)
  - I2T Function for Full Generator Protection
- 21 Light Remote Annunciator – Surface with Flush Mount Kit, Ships Loose
- Remote Emergency Stop Switch - Break Glass, Ships Loose
- 225 AH, 1155 CCA Group 8D Batteries, with Rack, Installed
- Battery Heating Pads
- Battery Charger - 10 Amp, NFPA 110 Compliant, Installed
- Coolant Heater - 1,500 Watt, 120 VAC, Forced Circulation Type
- Alternator Strip Heater
- Engine Run Relay, 10A
- Air Filter Restriction Indicator
- 120V GFCI and 240V Outlet
- 12-Position Load Center
- 800 Amp MLCB - 80% Rated, LSI Electronic Trip with Shunt Trip and Auxiliary Contacts
- Flex Fuel Line, Ships Loose
- Oil Temp Sender
- Vapor Recovery Heater
- 1 Hour Factory Load Testing at Reactive (0.8) Power Factor
- Set of 3 Owner's Manuals
- 2 Year Comprehensive Warranty
- SG0250GG20142S18PPSYG

Quantity 1 – Generac TX Series Automatic Transfer Switch, Consisting of the Following Features:

- Service Entrance Rated
- Time Delay Neutral
- 800 Amp, 3 pole, 120/208 VAC, three phase, 60 Hz, with 2-Wire Start Circuit
- Surface Mount Remote Annunciator
- 4 Sets of Form C Auxiliary Contacts
- Withstand and Close-On Rating - 100kA Specific Breaker
- CTs for Integrated Metering
- TVSS on Load
- IO Board - 4 Inputs, 4 Outputs
- UL Listed 1008 by ETL
- NEMA 3R Enclosure with Heater & Kick Plate
- Set of 3 Owner's Manuals
- 2 Year Comprehensive Warranty
- TX301DS0800G3CM

SCOPE OF WORK:

- Freight charges to the installation site are included. Offloading is not included.
- Start-up / testing of equipment and training by a Factory Trained & Certified Technician during normal business hours.
- Startup includes 1 visit to the site, if additional visits are required additional charges will be incurred.

This quotation and supporting materials contain confidential and proprietary business information of Wolverine Power Systems and Generac Power Systems. These materials may be printed or photocopied for use in evaluating the proposed project but are not to be shared with other parties outside of your organization.

TABLE OF CONTENTS

GENERATOR SPECIFICATION SHEETS

10000038995	SG250
A0002366454	POWER ZONE PRO SYNC

ALTERNATOR SPECIFICATION SHEETS

0183450SSD	ALTERNATOR DATA SHEET
0187980SBY	GENPROTECT DATA SHEET

UNIT OPTIONS

0161920SBY	ENGINE RUN RELAY
10000026036	REMOTE ANNUNCIATOR
A0001726823	REMOTE EMERGENCY STOP
10000001143	BLOCK HEATER
0603480SSD	ALTERNATOR STRIP HEATER
0161970SBY	BATTERY INDEX
0191900SBY	BATTERY HEATER
0197620SSD	BATTERY WARMER PAD
0163180SBY	SERIES 2000 ENCLOSURE
0180230SBY	SPEC SHEET RHINO COAT
0L1496B	SOUND DATA
10000004898	12 POSITION LOAD CENTER
A0004549669	EATON POWER DEFENSE CIRCUIT BREAKER

TRANSFER SWITCH SPECIFICATION SHEETS

A0002846631	TX301 SERIES - OPEN TRANSITION
A0000354456	TXS-100 ATS CONTROLLER
A0002366452	TX REMOTE ANNUNCIATOR

TABLE OF CONTENTS

FUEL SYSTEM

10000002132	GAS SUPPLY CHECKLIST SUBMITTAL DOC
A0000641394	Material Specification -Natural Gas

INSTALLATION DRAWINGS

0L0469B	LEVEL 1 SOUND ENCLOSURE
10000039616	OPEN SET
A0002852073	TX SERIES TRANSFER SWITCH

GENSET ELECTRICAL DRAWINGS

10000031140	WIRING DRAWINGS

TRANSFER SWITCH ELECTRICAL DRAWINGS

A0001679448	WIRING DRAWINGS

SYSTEM INTERCONNECT DRAWINGS

10000034013	INTERCONNECT DRAWING - POWER ZONE

WARRANTY

0J4299	2 YEAR EXTENDED WARRANTY - GENERATOR
0J4303	2 YEAR EXTENDED WARRANTY - TRANSFER SWITCH

CERTIFICATIONS

0184520SSD	QUALITY CERTIFICATION DOCUMENT
0K8347	ISO CERTIFICATE 9001 : 20
A0005488314	RGNXB14.22N1-012
A0006376253	EWAR COMMON - SPARK IGNITED

SG250 | 14.2 L | 250 kW

INDUSTRIAL SPARK-IGNITED GENERATOR SET

EPA Certified Stationary Emergency and Non-Emergency

GENERAC | INDUSTRIAL POWER

DEMAND RESPONSE READY

Standby Power Rating
250 kW, 313 kVA, 60 Hz

Demand Response Rating
250 kW, 313 kVA, 60 Hz

Prime Power Rating
225 kW, 281 kVA, 60 Hz

USA ENGINEERED & BUILT* — *Assembled in the USA using domestic and foreign parts

SMART GRID READY GENERAC GRID SERVICES **

** Offered on units sold in the U.S. and Canada

Image used for illustration purposes only

Codes and Standards

Not all codes and standards apply to all configurations. Contact factory for details.

UL2200, UL6200, UL1236, UL489

CSA C22.2

BS5514 and DIN 6271

SAE J1349

NFPA 37, 70, 99, 110

NEC700, 701, 702, 708

NEMA ICS10, MG1, 250, ICS6, AB1

ANSI C62.41

IBC 2009, CBC 2010, IBC 2012, ASCE 7-05, ASCE 7-10, ICC-ES AC-156 (2012)

Powering a Smarter World

For over 65 years, Generac has been at the forefront of power generation, pioneering innovative solutions and unparalleled manufacturing excellence. At the heart of our reputation for superior quality lies our commitment to meticulously designing and manufacturing key components of our generators—ranging from alternators and enclosures to base tanks, control systems, and cutting-edge communications software.

Generac's gensets stand out for their unparalleled versatility and reliability. Engineered to offer a wide range of options and configurations, they are tailored to meet the unique demands of virtually any application, seamlessly adapting to its complexity. Our commitment to reliability drives us to globally source only the most dependable engines, selected through stringent criteria for optimal performance under the toughest industrial conditions.

Beyond the sale, Generac's dedication to our customers extends to comprehensive service support, for peace of mind and reliability long after your purchase. Our commitment is to not only provide state-of-the-art power solutions but also enduring success and satisfaction of our customers through ongoing support and service excellence.

SG250 | 14.2 L | 250 kW

INDUSTRIAL SPARK-IGNITED GENERATOR SET

EPA Certified Stationary Emergency and Non-Emergency

STANDARD FEATURES

ENGINE SYSTEM
- Oil Drain Extension
- Air Cleaner
- Fan Guard (Open Sets Only)
- Stainless Steel Flexible Exhaust Connection
- Factory Filled Oil and Coolant
- Radiator Duct Adapter (Open Set Only)
- Critical Silencer (Enclosed Units Only)
- Oil Temperature Indication and Alarm

FUEL SYSTEM
- NPT Fuel Connection on Frame
- Primary and Secondary Fuel Shutoff

COOLING SYSTEM
- Closed Coolant Recovery System
- UV/Ozone Resistant Hoses
- Factory-Installed Radiator
- 50/50 Ethylene Glycol Antifreeze
- Radiator Drain Extension

ELECTRICAL SYSTEM
- Battery Charging Alternator
- Battery Cables
- Battery Tray
- Rubber-Booted Engine Electrical Connections
- Solenoid Activated Starter Motor

ENCLOSURE (If Selected)
- Rust-Proof Fasteners with Nylon Washers to Protect Finish
- High Performance Sound-Absorbing Material (Sound Attenuated Enclosures)
- Gasketed Doors
- Upward Facing Discharge Hood (Radiator and Exhaust)
- Stainless Steel Lift Off Door Hinges
- Stainless Steel Lockable Handles
- RhinoCoat™ - Textured Polyester Powder Coat Paint

GENERATOR SET
- Internal Genset Vibration Isolation
- Separation of Circuits - High/Low Voltage
- Separation of Circuits - Multiple Breakers
- Wrapped Exhaust Piping
- Standard Factory Testing
- Silencer Mounted in the Discharge Hood (Enclosed Units Only)
- Ready to Accept Full Load in <10 Seconds

ALTERNATOR SYSTEM
- UL2200 GENprotect™
- Class H Insulation Material
- 2/3 Pitch
- Skewed Stator
- Permanent Magnet Excitation
- Sealed Bearing
- Amortisseur Winding
- Full Load Capacity Alternator

CONTROL SYSTEM

Power Zone® Pro Sync Controller

Program Functions
- NFPA 110 Level 1 Compliant
- Engine Protective Functions
- Alternator Protective Functions
- Digital Engine Governor Control
- Digital Voltage Regulator
- Multiple Programmable Inputs and Outputs
- Remote Display Capability
- Remote Communication via Modbus® RTU, Modbus TCP/IP, and Ethernet 10/100
- Alarm and Event Logging with Real Time Stamping
- Expandable Analog and Digital Inputs and Outputs
- Remote Wireless Software Update Capable
- BMS and Remote Telemetry
- Built-In Programmable Logic Eliminates the Need for External Controllers Under Most Conditions
- Ethernet Based Communications Between Generators
- Programmable I/O Channel Properties
- Built-In Diagnostics
- Arc Flash Maintenance Mode (When Correctly Equipped)

Alarms and Warnings
- Low Oil Pressure
- Low Coolant Level
- High/Low Coolant Temperature
- Sensor Failure
- Oil Temperature
- Over/Under Speed
- Over/Under Voltage
- Over/Under Frequency
- Over/Under Current
- Over Load
- High/Low Battery Voltage
- Battery Charger Current
- Phase to Phase and Phase to Neutral Short Circuits (I^2T Algorithm)

7 Inch Color Touch Screen Display
- Resistive Color Touch Screen
- Sunlight Readable (1400 NITS)
- Easily Identifiable Icons
- Multi-Lingual
- On Screen Editable Parameters
- Key Function Monitoring
- Three Phase Voltage, Amperage, kW, kVA, and kVAr
- Selectable Line to Line or Line to Neutral Measurements
- Frequency
- Engine Speed
- Engine Coolant Temperature
- Engine Oil Pressure
- Engine Oil Temperature
- Battery Voltage
- Hourmeter
- Warning and Alarm Indication
- Diagnostics
- Maintenance Events/Information

SG250 | 14.2 L | 250 kW

INDUSTRIAL SPARK-IGNITED GENERATOR SET

EPA Certified Stationary Emergency and Non-Emergency

GENERAC | INDUSTRIAL POWER

APPLICATION AND ENGINEERING DATA

ENGINE SPECIFICATIONS

General

Make	Generac
Cylinder #	6
Type	In-line
Displacement - in³ (L)	864.71 (14.2)
Bore: in (mm)	5.31 (135)
Stroke: in (mm)	6.50 (165)
Compression Ratio	9.5:1
Intake Air Method	Turbocharged/Aftercooled
Number of Main Bearings	7
Connecting Rods	Steel Alloy
Cylinder Head	Cast Iron
Cylinder Liners	Ductile Iron
Ignition	Electronic
Piston Type	Aluminum
Crankshaft Type	Ductile Iron
Lifter Type	Solid
Intake Valve Material	Special Heat-Resistant Steel
Exhaust Valve Material	High Temperature Steel Alloy
Hardened Valve Seats	High Temperature Steel Alloy

Engine Governing

Governor	Electronic
Frequency Regulation (Steady State)	±0.25%

Lubrication System

Oil Pump Type	Gear
Oil Filter Type	Full Flow Spin-On Cartridge
Engine Oil Capacity: qt (L)	36.2 (34.3)

Cooling System

Cooling System Type	Pressurized Closed Recovery
Fan Type	Pusher
Fan Speed (RPM)	1,894
Fan Diameter - in (mm)	30 (762)

Fuel System

Fuel Type	Natural Gas
Carburetor	Down Draft
Secondary Fuel Regulator	Standard
Fuel Shut Off Solenoid	Standard
Operating Fuel Pressure- in H_2O (kPa)	7 - 11 (1.7 - 2.7)

*When designing the external fuel system, assume a 20% safety factor to the upper and lower limit of the specified fuel pressure range to account for site variation and measurement at the generator test port.Refer to Generac document 10000046207. Latest rev. for proper gas supply design guidelines. (Contact Factory for Details)

Engine Electrical System

System Voltage	24 VDC
Battery Charger Alternator	57.5 A
Battery Size	See Battery Index 0161970SBY
Battery Voltage	24 VDC
Ground Polarity	Negative (-)

ALTERNATOR SPECIFICATIONS

Standard Model	K0250124Y21
Poles	4
Field Type	Revolving
Insulation Class - Rotor	H
Insulation Class - Stator	H
Total Harmonic Distortion	<5%
Telephone Interference Factor (TIF)	<50

Standard Excitation	Permanent Magnet
Bearings	Single Sealed Ball
Coupling	Direct via Flexible Disc
Prototype Short Circuit Test	Yes
Voltage Regulator Type	Full Digital
Number of Sensed Phases	All
Regulation Accuracy (Steady State)	±0.25%

ENGINE SYSTEM

- Engine Coolant Heater
- Air Filter Restriction Indicator
- Engine Run Relay

ALTERNATOR SYSTEM

- Anti-Condensation Heater

ENCLOSURE

- Level 1 Sound Attenuated
- Steel Enclosure
- Enclosure Heaters

FUEL SYSTEM

- NPT Flexible Fuel Line

CIRCUIT BREAKER

- Main Line Circuit Breaker
- Shunt Trip and Auxiliary Contact
- Electronic Trip Breakers

CONTROL SYSTEM

- 21-Light Remote Annunciator
- Remote E-Stop (Break Glass-Type)
- 120V GFCI and 240V Outlets

ELECTRICAL SYSTEM

- 10A UL Listed Battery Charger
- Battery Warmer

GENERATOR SET

- Extended Factory Testing
- 12 Position Load Center
- Vapor Recovery Heater

WARRANTY

- 2 Year Extended Limited Warranty

OPERATING DATA

POWER RATINGS - NATURAL GAS

	Standby	
Three-Phase 120/208 VAC @0.8pf	250 kW/313 kVA	Amps: 868

MOTOR STARTING CAPABILITIES (skVA)

skVA vs. Voltage Dip	
208/240 VAC	30%
K0250124Y21	506

FUEL CONSUMPTION RATES*

Natural Gas – scfh (m^3/hr)	
Percent Load	Standby
25%	1,020 (28.9)
50%	1,620 (45.9)
75%	2,520 (71.4)
100%	3,180 (90.0)

* 1.5X maximum site rated fuel consumption should be used for gas supply design practices.
Refer to Generac 10000046207, latest rev., for more information or contact factory for details.

COOLING

		Standby
Air Flow (Fan Air Flow Across Radiator)	cfm (m^3/min)	10,078 (285.4)
Coolant Flow	gpm (Lpm)	90 (340.7)
Coolant System Capacity	gal (L)	15 (54.9)
Maximum Operating Ambient Temperature	°F (°C)	122 (50)
Maximum Operating Ambient Temperature (Before Derate)		See Bulletin No. 0199270SSD
Maximum Additional Radiator Backpressure	in H_2O (kPa)	0.5 (0.12)

COMBUSTION AIR REQUIREMENTS

	Standby/Demand Response
Flow at rated power cfm - (m^3/min)	506 (14.3)

ENGINE

		Standby
Rated Engine Speed	RPM	1,800
Horsepower at Rated kW**	hp	375
Piston Speed	ft/min (m/min)	1,950 (594)
BMEP	psi (kPa)	190 (1,313)

** See "Emissions Data Sheet" for maximum bHP for EPA and SCAQMD permitting purposes.

EXHAUST

		Standby
Exhaust Flow (Rated Output)	cfm (m^3/min)	1,703 (48)
Max. Backpressure (Post Silencer)	inHg (kPa)	0.75 (2.54)
Exhaust Temp (Rated Output - Post Silencer)	°F (°C)	1,357 (736)

Deration – Operational characteristics consider maximum ambient conditions. Derate factors may apply under atypical site conditions.
Please contact a Generac Power Systems Industrial Dealer for additional details. All performance ratings in accordance with BS5514 and DIN6271 standards.
Standby - See Bulletin 0187500SSB • Demand Response - See Bulletin 10000018250 • Prime - See Bulletin 0187510SSB

DIMENSIONS AND WEIGHTS*

LEVEL 1 SOUND ATTENUATED ENCLOSURE

L x W x H - in (mm)	200.2 (5,085) x 57.5 (1,461) x 77.8 (1,976)
Weight - lbs (kg)	Steel 7,928 - 8,059 (3,596)

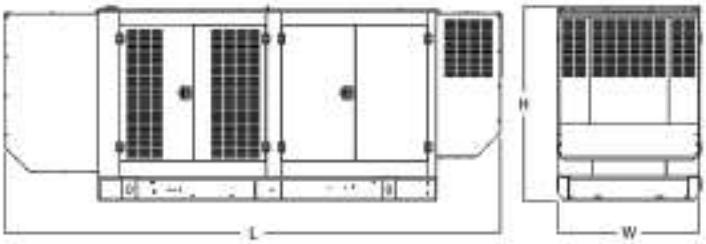

* All measurements are approximate and for estimation purposes only.

Specification characteristics may change without notice.

Dimensions and weights are for preliminary purposes only.

Please consult a Generac Power Systems Industrial Dealer for detailed installation drawings

©2024 Generac Power Systems, Inc. All rights reserved. All specifications are subject to change without notice.
Part No. 10000038995
Rev. E 10/29/2024

POWER ZONE® CONTROL PLATFORM
Power Zone® Pro Sync Controller

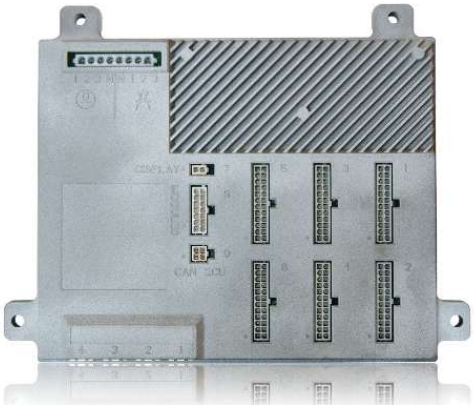

Voltage Regulation (Single or Three Phase Module Options)
- Digital Control
- Three Phase Sensing††
- Variable V/F Slope Settings and Adjustable Gains
- Negative Power Limit
- Soft Start Ramping
- Loss of Sensing Protection
- Components Encapsulated for Total Protection
- Paralleling Function for Power Zone® -DSP and Power Zone®-GSP ‡
- Fault Protection (I^2T Function)‡
- High Voltage Limit
- Low Voltage Limit
- Maximum Power Limit
- ±0.5% Voltage Regulation
- ±0.1% Stability

Display (Touch Screen)
- Resistive Color Touch Screen
- Hi-Brite (1400 NITS)
- Easy Identifiable Icons
- Multi-Lingual
- IP65 Rated
- On Screen Editable Parameters
- Key Function Monitoring
  - Three Phase Voltage, Amperage, kW, kVa, and kVAr
  - Selectable Line to Line or Line to Neutral Measurements
  - Frequency
  - RPM
  - Engine Coolant Temperature
  - Engine Oil Pressure
  - Engine Oil Temperature
  - Battery Voltage
  - Warning and Alarm Indication
  - Diagnostics
  - Maintenance Events/Information
  - Hourmeter

Governor Module
- Soft Start Ramping (Multiple Steps)
- Synchronizing Function for Power Zone® -DSP and Power Zone® -GSP Only ‡
- Fully Adjustable Gain (PID)

Qualification Testing
- Life Test in Environmental Chamber
- Temperature Rating -40° C to +60° C
- Humidity 2% to 95% (Non Condensing)
- Vibration Tested and Protected

Connections§
- 27 - Digital Outputs (Open Drain, 35 VDC, 1.7A)
  - 6 Fast PWM Capable
  - 1 High Current
- 20 - Digital Inputs Maximum
  - 6 Fast PWM Capable
- 12 - General Purpose Analog Inputs
- 4 - Fast Analog Inputs
- 4 - Analog Outputs (0-10 VDC)
- 1 - E-Stop Relay Output
- 7 - Current Sense Inputs
- 2 - High Voltage Sense Inputs (Three Phase + Neutral)
- 2 - Magnetic Pickup Inputs
- 1 - Coolant Sensor Input
- 4 - Ethernet Ports
- 3 - CANBus Channels
- 1 - RS-485 Ports
- 2 - Switchable +12V Power Outputs

Codes And Standards
- UL 6200
- C-ETL-US
- CE
- FCC
- NFPA 110 (Software Programmable for Level 1 or 2)§§

Control Panel And Touch Screen
- Auto/Off/Manual
  - Operation Through Key Switch
  - Indication Through Touchscreen
- Alarm Acknowledge Button
- Audible Alarm and Silence
- Emergency Stop
- Not in Auto Indication

†† With Select Voltage Regulators
‡ Configurable Option
§ Actual I/O May Vary Due to Configuration
§§ With Additional Optional Remote Annunciator

Generac Power Systems, Inc. | P.O. Box 8 | Waukesha, WI 53187
P: (262) 544-4811 © 2023 Generac Power Systems, Inc. All rights reserved. All specifications are subject to change

Part No. A0002366454
Rev. B 01/24/23

ALTERNATOR DATA SHEET
K0250124Y21

General Characteristics

Voltages (V)	208	Number of Leads	12
Frequency (Hz)	60	Winding Type	Reconnectable
Phases	3	Air Flow (CFM)	1,500
Speed (RPM)	1,800	Total Harmonic Distortion (%)	<5
Excitation System	PMG	Largest Single Harmonic Value (%)	<3.5
Insulation Class	H	Telephone Interference Factor (TIF)	<50
Winding Pitch	2/3	Reference Part Number	0L3718E01R

Ratings at 0.8 pf based on 40°C Ambient

Voltage (V)	120°C Rise	
	kW	kVA
208	250	312

Base Data at 480V, 312 kVA, 1,800 RPM, 60 Hz, 3Ø

Description	Value
Stator Resistance, Line to Line, High Wye Connection (Ω)	0.0095
Rotor Resistance (Ω)	1.250
Exciter Stator Resistance - PMG (Ω)	7.590
Exciter Rotor Resistance - PMG (Ω)	0.3300
Excitation Winding Resistance - PMG (Ω)	1.1288
Xd, Direct Axis Synchronous Reactance (p.u.)	3.30
X2, Negative Sequence Reactance (p.u.)	0.22
X0, Zero Sequence Reactance (p.u.)	0.08
X'd, Direct Axis Transient Reactance (p.u.)	0.17
X"d, Direct Axis Subtransient Reactance (p.u.)	0.15
Xq, Quadrature Axis Synchronous Reactance (p.u.)	1.58
T'd, Direct Axis Transient Short Circuit Time Constant (s)	0.107

Description	Value
T"d, Direct Axis Subtransient Short Circuit Time Constant (s)	0.016
T'do, Direct Axis Transient Open Circuit Time Constant (s)	2.510
Ta, Short Circuit Time Constant of Armature Winding (s)	0.034
Phase Sequence CCW-NDE	T1, T2, T3
Voltage Balance, L-L or L-N (%)	2.5
Deviation Factor (%)	< 7
High Wye Connection, Sustained 3Ø Short Circuit Current (%) - PMG	300
X/R	13
Short Circuit Ratio	0.52
Heat Rejection (BTU/hr) - 100% Rated Load, 480V, 0.8pf, 120°C Temperature Rise	96,893

Reference: Mil-STD-705B
All Ratings are Nominal

Part No. 0183450SSD
Rev. F 03/22/21

ALTERNATOR DATA SHEET
K0250124Y21

skVA

	10%	15%	20%	25%	30%	35%
208V @ 0.6PF	140	210	296	390	506	612

Efficiencies

Rated Power*	208 V @ 0.8PF
20%	83.6
40%	88.2
60%	89.8
80%	89.9
100%	89.4

*Rated Power value is rating kW at 120°C Winding Temperature Rise and 0.8pf

LOG LOG Decrement Curve

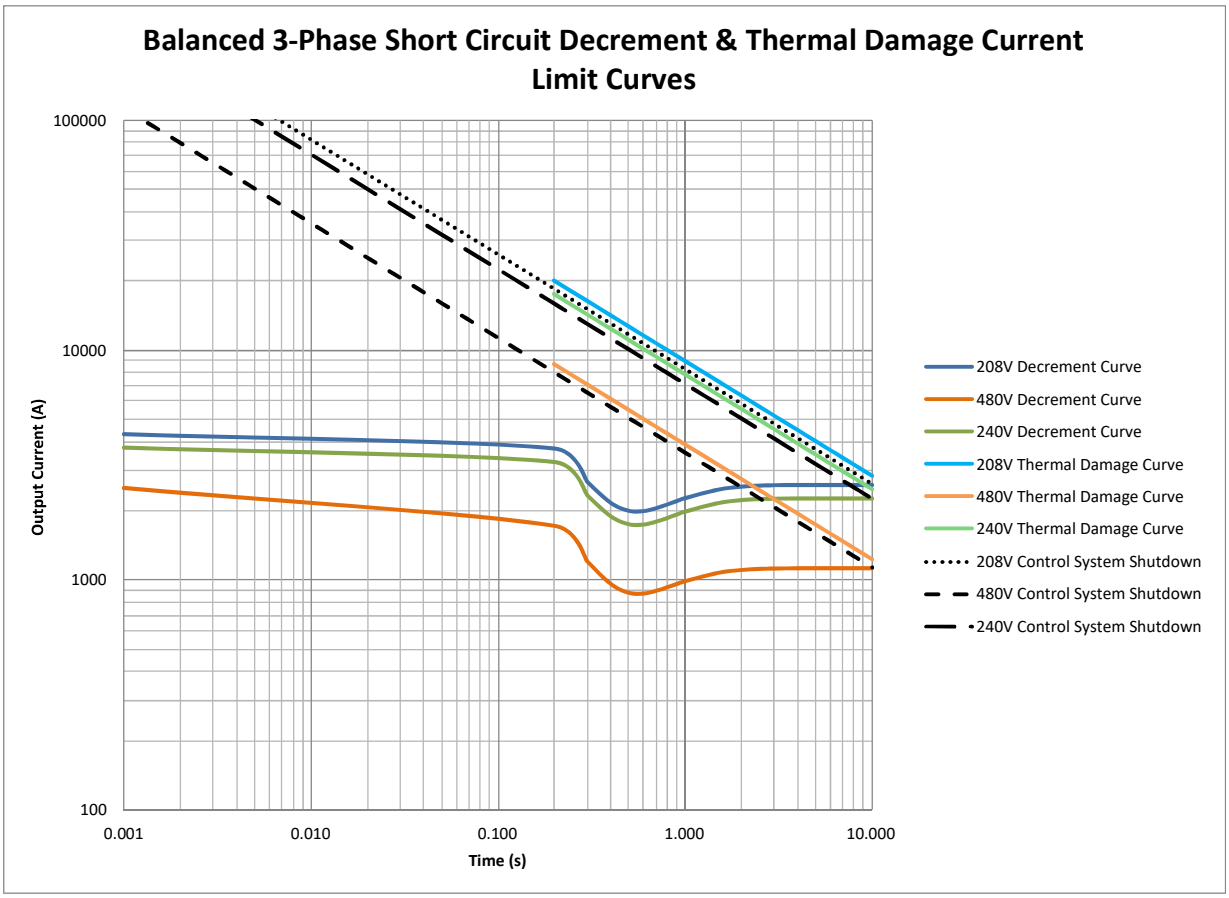

Generac Power Systems, Inc. | P.O. Box 8 | Waukesha, WI 53187
P: (262) 544-4811 © 2021 Generac Power Systems, Inc. All rights reserved. All specifications are subject to change without notice.

Part No. 0183450SSD
Rev. F 03/22/21

GENprotect ™
Seamless Protection for Industrial Power Generators

GENprotect Operation

The design choice of an onsite power system using a Generac Industrial Power Generator assures your emergency power source is protected from unexpected power distribution faults. Typically, a generator will include some type of over-current device, such as a circuit breaker, or be protected by inherent design with the controller protecting the alternator through a protection algorithm. Generac's GENprotect generator protection system monitors the system current output and protects the alternator with extended security against fault scenarios that could occur within the site's downstream distribution system.

It is a common misconception that the alternator's main circuit breaker protects the alternator from a short circuit event. The main output breaker protects the cabling and provides a convenient disconnect. The characteristic trip curve for the industry standard thermal magnetic breaker (MCCB, molded case thermal magnetic or solid state) does not coordinate with the thermal damage limitation for an on-site generator. If circuit breakers are used for generator protection, a solid-state circuit breaker with full adjustments (Long Time, Short Time and Instantaneous, LSI) is required to coordinate the breaker protection curve within the generator thermal damage curve. Historically, this limitation was often accepted in system design since failures of the main generator feeder are extremely rare. Most short circuit events happen at a branch circuit, equipment level, where the fault is easily cleared by the smaller down stream breakers.

Given the mission critical nature of today's back-up power applications, it is more desirable to protect the system against even relatively rare failure modes. As generator controllers have become more powerful it is feasible for manufactures to supply coordinated short circuit protection integral to the generator control system, negating the need for a main-line circuit breaker.

Generac's GENprotect alternator protection algorithm monitors the generator output. If this monitoring senses short circuit current in excess of rated amps, GENprotect steps in to provide a controlled and safe approach to breaker coordination and alternator protection. GENprotect first limits the alternator short circuit current level to 300%. By limiting the available fault current, GENprotect extends the time the alternator can maintain fault current resulting in consistent breaker coordination. Without this functionality a line to neutral fault may be at 800% of rated current and need to be cleared within 1.4 seconds. The second function GENprotect performs is I2T thermal protection for the alternator. Since a short circuit event can heat the alternator so rapidly, it is not possible to protect the alternator by monitoring temperature. Instead GENprotect calculates the heat energy of the fault current. When this energy reaches the limits of NEMA MG1, GENprotect trips the generator off-line. This configuration ensures the alternator is protected and the power system is ensured 10 seconds of 300% fault current for breaker coordination.

DESCRIPTION

- GENprotect is an alternator protection algorithm approved by UL.
- Protects alternator from damage due to shorts and electrical faults.
- Provides breaker coordination and alternator protection.
- Allows for use of multiple circuit breaker choices, including "no" breaker.

Doc. No 0187980SBY
Rev. D 06/13/19

GENprotect ™
Seamless Protection for Industrial Power Generators

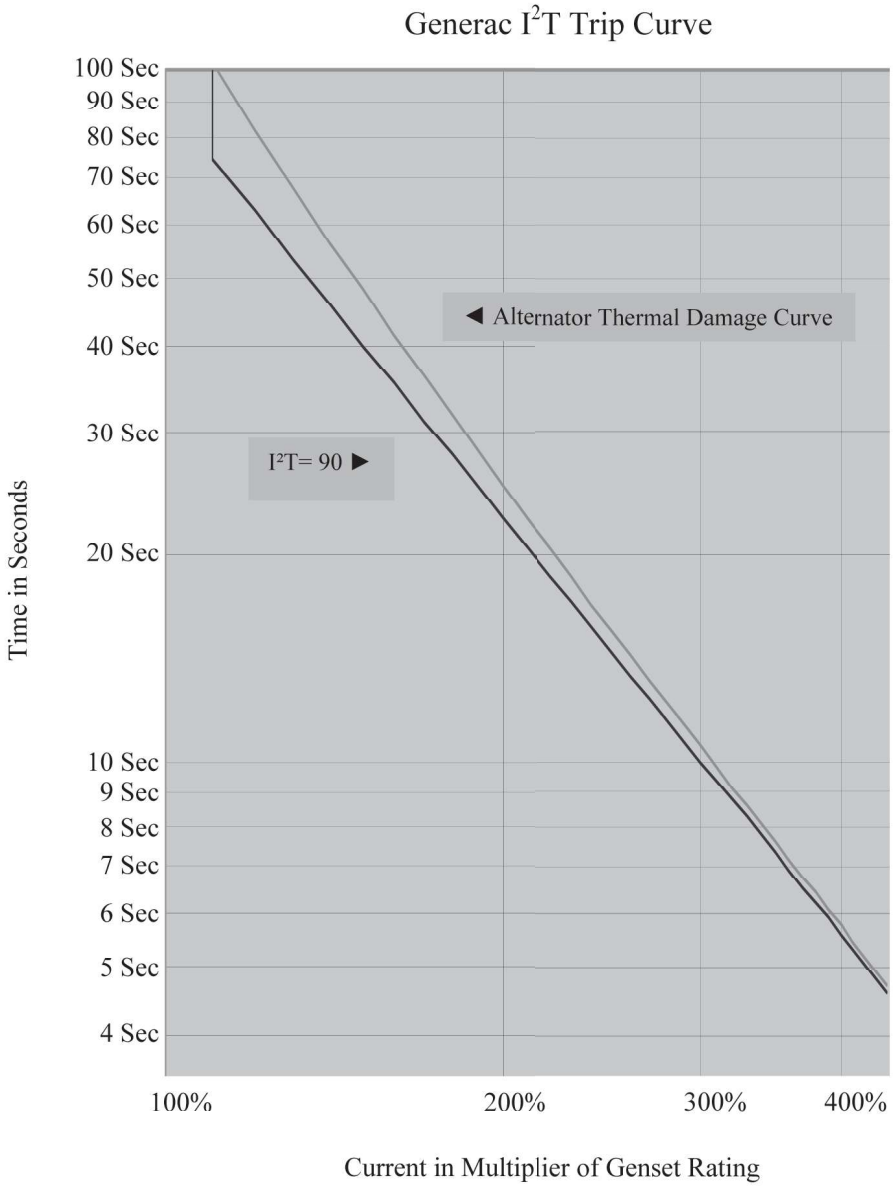

The above Figure shows the Generac GENprotect thermal protection curve for use in protection and coordination studies. The alternator Thermal Damage Curve is shown just to the right of the GENprotect protection curve. If the alternator load is greater than the thermal damage protection curve for the alternator, the generator set will trip off-line. For example, an overload current of 110% for 75 seconds causes an overload alarm and will trip the generator off-line, shutting down the engine. GENprotect will provide generator protection over a full range of time and current, from instantaneous faults to overloads lasting several minutes. An advantage of GENprotect over a MCCB is that GENprotect allows for downstream breakers to clear faults without tripping the generator off-line, providing selective coordination with the first level of downstream breakers.

 © 2019 Generac Power Systems, Inc. All rights reserved. All specifications are subject to change without notice.

ENGINE RUN RELAY

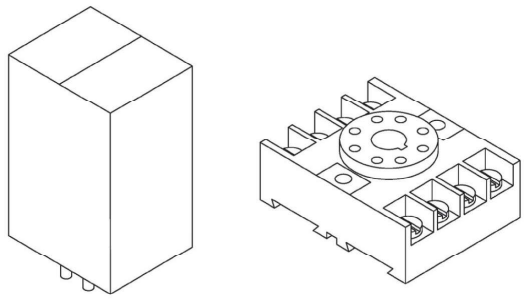

- For use with Generac's Digital Control Platforms
- 10 Amp Contact Rating
- 12 or 24 Volt DC Input
- Contact Open or Closure on Engine Run

Contacts	
Type	DPDT
Material	Silver
Rating	UL 10A @ 240VAC 10A @ 30VDC
Coils	
Input Voltage	24VDC
Resistance	400 Ohms
Nominal Power	1.5W

Wiring Diagram with E panel, H-100 Panel

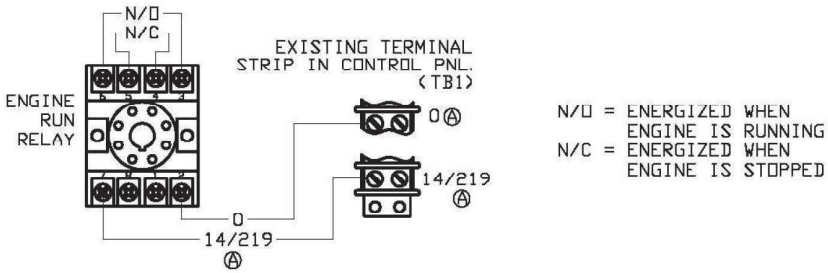

Wiring Diagram with PMDCP

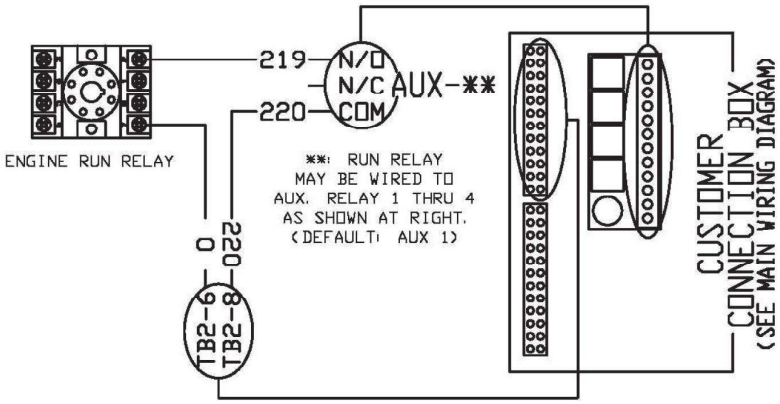

Wiring Diagram with Power Zone Pro Sync

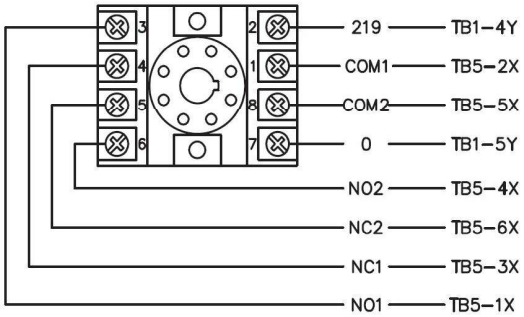

TB5

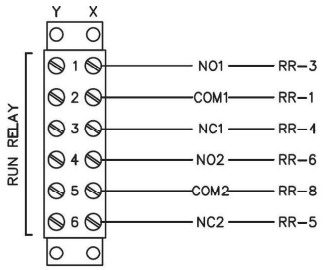

Pin Detail

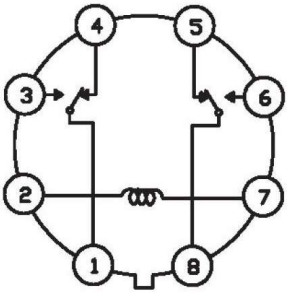

Generac Power Systems, Inc. | P.O. Box 8 | Waukesha, WI 53187
P: (262) 544-4811 © 2019 Generac Power Systems, Inc. All rights reserved. All specifications are subject to change without notice.

Part No.0161920SBY
Rev. E 06/12/19

REMOTE EMERGENCY STOP SWITCH
Break Glass - Power Zone® Pro & Pro Sync, G8601

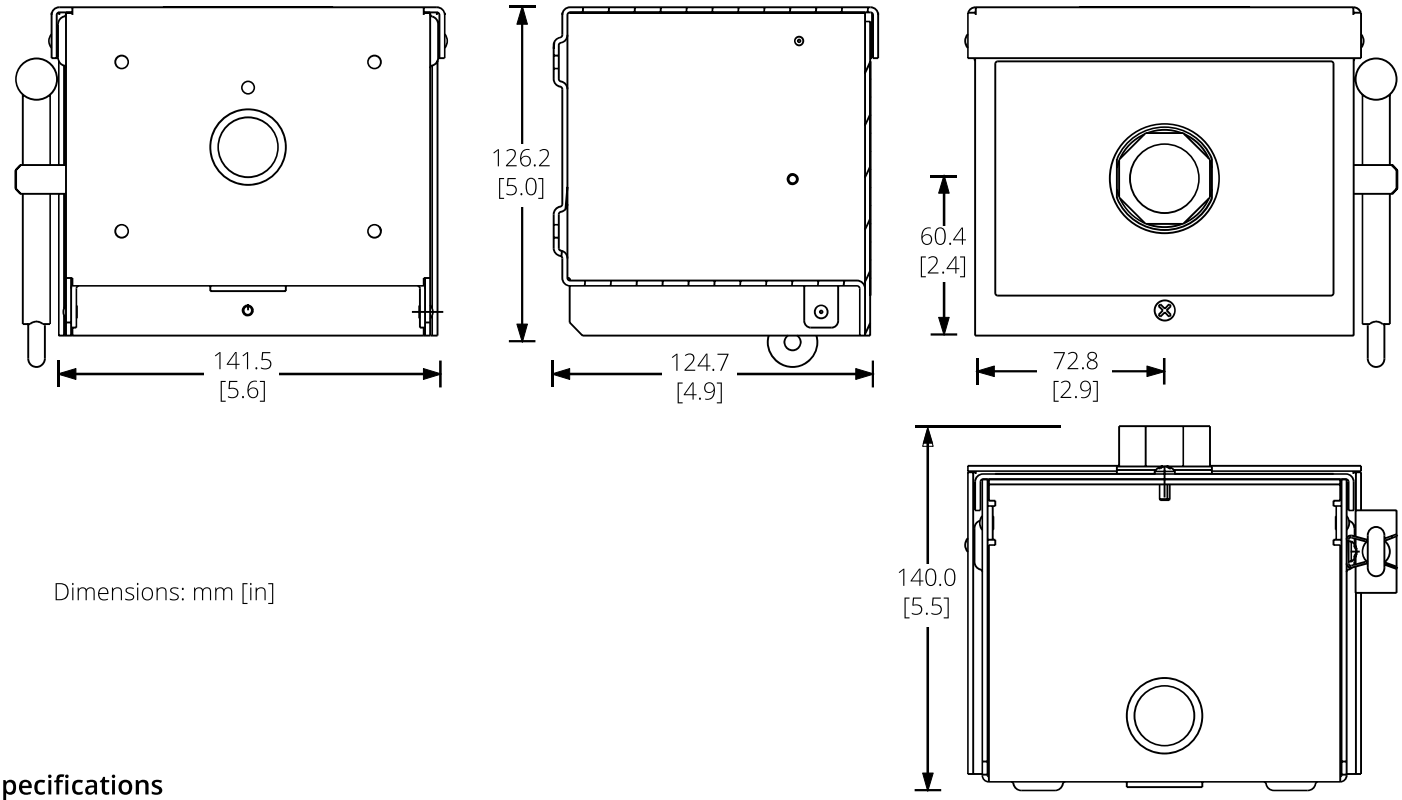

Dimensions: mm [in]

Specifications

Generac Part Number: A0000960234
Surface Mount, NEMA 3R
5 Replacement Glasses
Aluminum Enclosure
Contact Rating: AC-15 3A 240V, DC-13 1.1A 125V
Contact Blocks: 3
Compatible Controllers: Power Zone® Pro, Power Zone® Pro Sync, G8601

Wiring varies by engine; refer to unit specific wiring diagram.

Generac Power Systems, Inc. | P.O. Box 8 | Waukesha, WI 53187
P: (262) 544-4811 © 2023 Generac Power Systems, Inc. All rights reserved. All specifications are subject to change without notice.

Part No. A0001726823
Rev. C 04/04/23

21 Light Remote Annunciator

Gray Remote Annunciator Panel

Description

The Remote Annunciator Panel provides remote monitoring and annunciation for up to 21 generator and system indications. 21 LEDs indicate 18 generator, 2 system, and 1 programmable condition.

The Relay panel has up to 8 selectable functions on form A relays; multiple relay panels can be connected for all 21 generator parameters.

The specific faults can be programmed through the Power Zone® display located on the generator.

Communications for a Power Zone® or G8601 equipped generator is RS-485.

All models require battery power (+12 or +24 VDC) sourced from the generator battery.

The Remote Annunciator Panel complies with NFPA 99 and NFPA 110.

Environmental Specifications

Operating Temperature ..... -25 °C to 60 °C
Humidity ..... 0 to 95% Non-Condensing
Power Supply ..... Generator Battery, +12 or +24 Volts DC
Power Usage ..... 6 Watts Typical
RS-485 Communications ..... Fully Isolated Twisted Pair Cable with Shield
RS-485 Length ..... 4,000 ft
Relay Output .. One N.O. Contact and 8** N.O. & N.C. Contacts (Energized when Annunciator is Powered and No Faults are Present)
Relay Contact Rating ..... 30 VDC, 1 amp
Enclosure Rating ..... NEMA 1
Alarm Horn (Remote Annunciator Panels Only) ..... 90 dB @ 10 cm

*Max Distance Between Hubs - No Limit on Number of Hubs or Total Distance
**Only available on Models G0098511, G0098521

Part No. 10000026036
Rev. G 10/02/23

21 Light Remote Annunciator and Remote Relay Panel

Function	Color	Alarm	Latched
Pre-Low Oil Pressure	Yellow	Yes	Yes
Pre-High Water Temperature	Yellow	Yes	Yes
Pre-Low Water Temperature	Yellow	Yes	Yes
Pre-Low Fuel	Yellow	Yes	Yes
Battery Charge AC Fail	Yellow	Yes	No
Low Battery Voltage	Yellow	Yes	No
High Battery Voltage	Yellow	No	No
Not in Auto	Red	Yes	No
RPM Sensor Loss	Red	Yes	Yes
Overcrank	Red	Yes	Yes
Overspeed	Red	Yes	Yes
Low Oil Pressure	Red	Yes	Yes
High Water Temperature	Red	Yes	Yes
Low Water Level	Red	Yes	Yes
Emergency Stop	Red	Yes	No
Gen Running	Yellow	No	No
Gen Power (ATS)	Yellow	No	No
Line Power (ATS)	Green	No	No
Systems Ready	Green	Yes	No
Communications OK	Green	Yes	No
Spare	Green	No	No

Spare Keypad Switch can be used to implement a remote start function (Models G0098511 and G0098521 only).

Annunciators

Surface Mount

The 21 Light Annunciator can mount to a flat surface with connections through the 0.812 inch diameter knockout on the back surface or through 0.812 inch diameter knockouts on sides as shown.

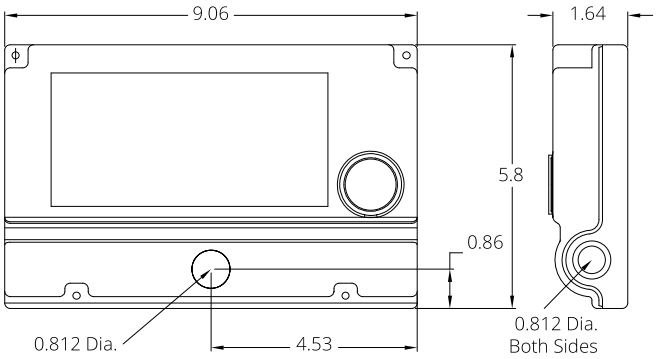

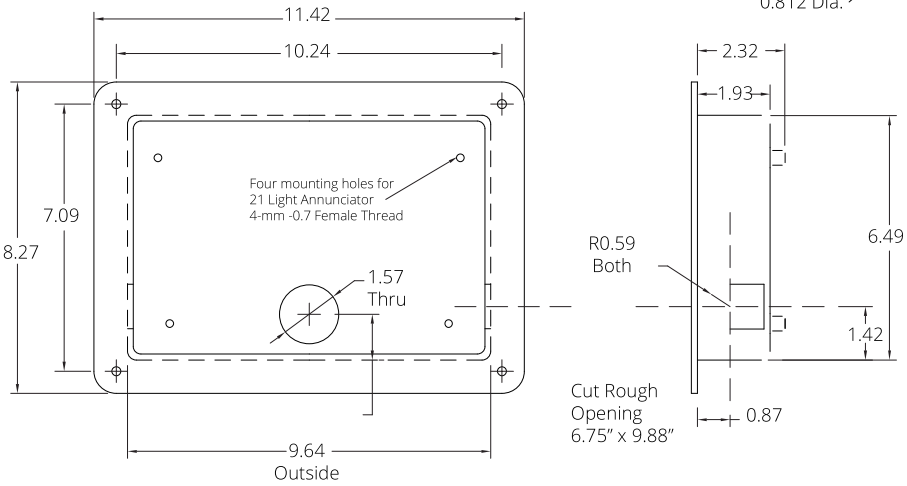

Flush Mount Kit

This Flush Mount Box is recessed into the wall opening and the surface mount annunciator mounts to the (4) 4 mm screw holes on the back surface. After wire connections are made the front annunciator cover is attached.

All dimensions are in inches.

Generac Power Systems, Inc. | P.O. Box 8 | Waukesha, WI 53187
P: (262) 544-4811 © 2023 Generac Power Systems, Inc. All rights reserved. All specifications are subject to change without notice.

Part No. 10000026036
Rev. G 10/02/23

POWER ZONE® CONTROL PLATFORM
Power Zone® Pro Sync Controller

Features

The Generac Power Zone® Digital Control Platform is a fully integrated and multipurpose family of controllers for Generac's single and Modular Power Systems (MPS).

Standard Single Unit Control Features*
- Engine Protective Functions
- Alternator Protective Functions
- Digital Engine Governor Control
- Digital Voltage Regulator
- 7" Color Touch Screen
- Multi-Lingual
- Multiple Programmable Inputs and Outputs
- Remote Display Capability
- Remote Communication via Modbus® RTU, Modbus TCP/IP, Ethernet 10/100, SNMP
- Alarm and Event Logging with Real Time Stamping
- Expandable Analog and Digital Inputs and Outputs
- Wireless Software Update via Remote Computer
- BMS and Remote Telemetry
- USB Port for Easy Log Data Downloads and Firmware Updates
- Analog Input Bias for Speed and Voltage◊
- E-mail Notifications for Alarm Conditions and Log Data†

Additional Standard Parallel Control Features**
- Paralleling Control (Synchronizing)
- Reverse Power
- Loss of Synchronization Between Gensets
- Load and VAR Sharing

Standard System Control Features
- Built-In PLC Logic Eliminates the Need for External Controllers Under Most Conditions
- Ethernet Based Communications Between Gensets
- Programmable I/O Channel Properties
- Built-In Diagnostics

Customer Ports
- 1 - RS-485 - Modbus RTU (Main Controller)
- 1 - RJ45 - Remote Annunciator Panel/Remote Relay Panel (Main Controller)
- 1 - CANBus - Power Zone® Accessories (Main Controller)
- 1 - RJ45 - Modbus TCP/IP or Ethernet 10/100 (Display)
- 2 - Type A USB (Display)

PLC (Built-In Programmable Logic Controller)
- Boolean Logic Programming (Ladder)
- 16 Timers
- 16 Counters
- Counter Reset
- Configurable Through Software Tool

Protections
- Low Oil Pressure
- Low Coolant Level
- High/Low Coolant Temperature
- Sender Failure
- Oil Temperature
- Over/Under Speed
- Over/Under Voltage
- Over/Under Frequency
- Over/Under Current
- Over Load
- Battery Voltage
- Battery Charger Current
- Phase to Phase and Phase to Neutral Short Circuits (I^2T Algorithm)

*** For SG and SD Models**
**** For MG and MD Models**

◊ Not Available in Parallel Controller
† Requires Use of a Network Accessible Authenticated or Open SMTP Server

Part No. A0002366454
Rev. B 01/24/23

ALTERNATOR STRIP HEATER 120 VAC

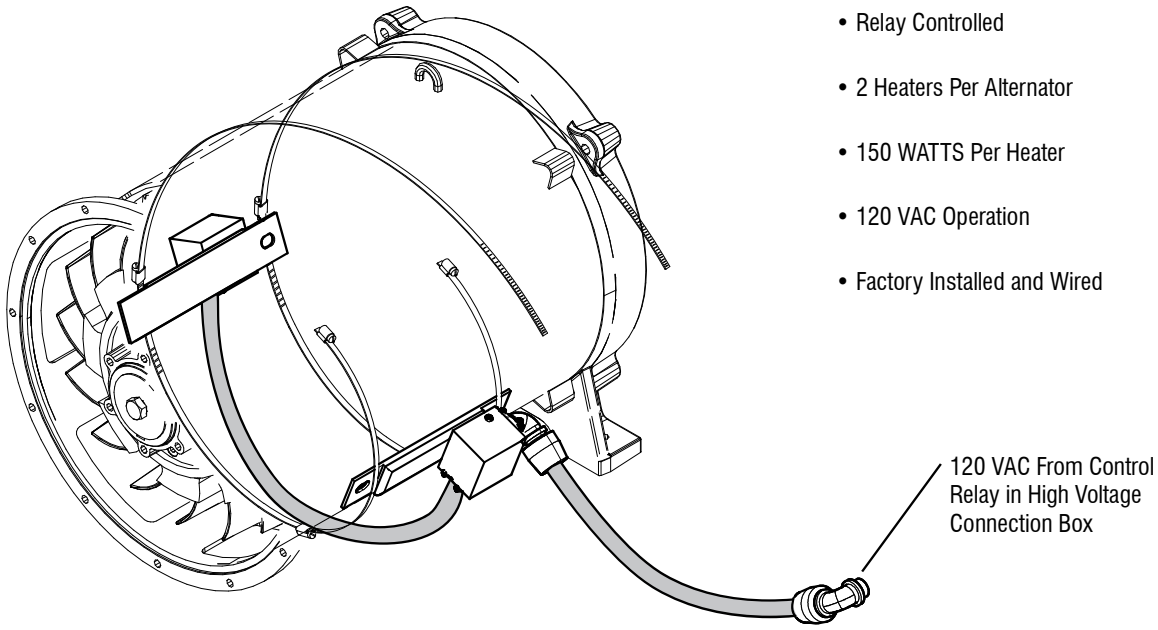

- Relay Controlled
- 2 Heaters Per Alternator
- 150 WATTS Per Heater
- 120 VAC Operation
- Factory Installed and Wired

Typical Heater Location on Alternator

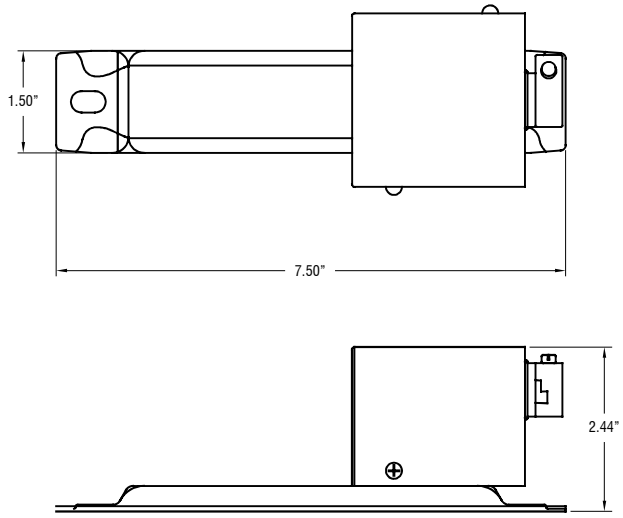

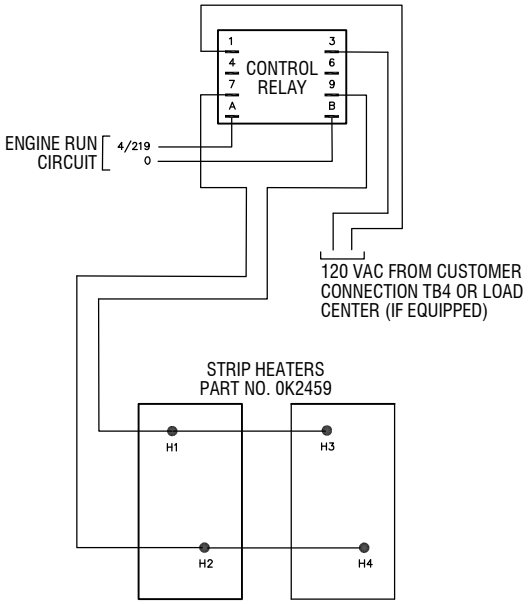

WIRING DIAGRAM

 © 2019 Generac Power Systems, Inc. All rights reserved. All specifications are subject to change without notice.

Part No. 0603480SSD
Rev. E 06/14/19

COOLANT HEATER OPTION
1500 WATT, 120VAC

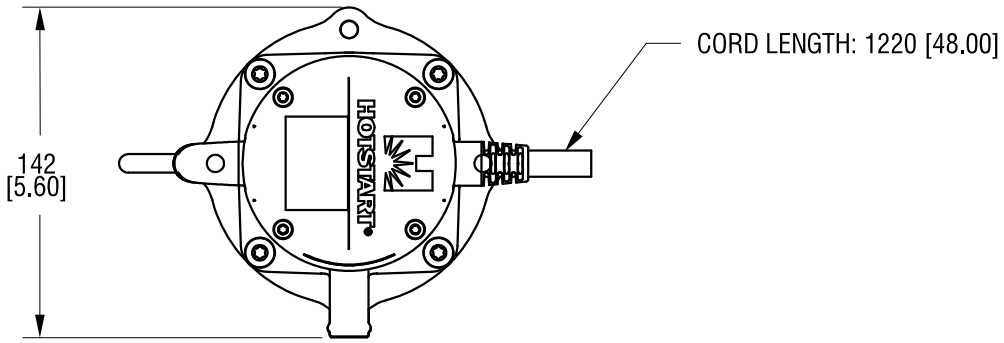

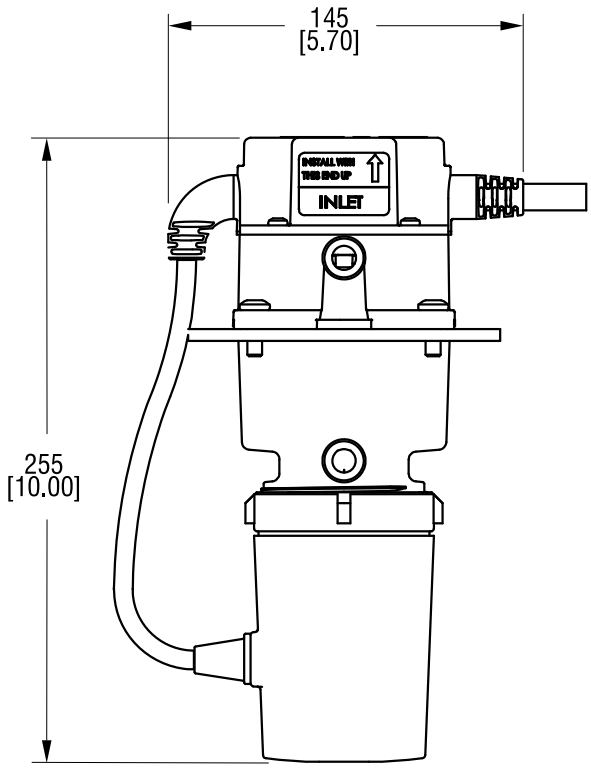

- HOTSTART® HOTFLOW™ CTM15108-N01
- WATTS: 1500
- VOLTAGE: 120VAC SINGLE PHASE
- FIXED THERMOSTAT: 80/100° F
- FLOW RATE: 3.5 GPM @ 3 PSI
- UL/C-US LISTED

c UL us LISTED

DIMENSIONS: mm [INCHES]

Generac Power Systems, Inc. | P.O. Box 8 | Waukesha, WI 53187
P: (262) 544-4811 © 2015 Generac Power Systems, Inc. All rights reserved. All specifications are subject to change without notice.

Part No. 0J4988D
04/27/15

INDUSTRIAL GENSET BATTERY

• Warranty by Exide Corp. • Exide e-mail: tbgna@exide.com • 800-782-7848 National Hot line

Engine	System Voltage	Battery Quantity	Generac Part # 061104
G14.2	24	2	X

Group Number*	Nominal CCA @ 0° F	Dimensions (in) Nominal L	W	H
8D	1,200	11.00	20.80	10.00

All batteries are 12V, 6 cell construction, lead calcium type. For 24V systems, batteries are wired in series.

X Battery available with electrolyte and installed in genset.
*BCI Group Size reference.

Generac Power Systems, Inc. | P.O. Box 8 | Waukesha, WI 53187
P: (262) 544-4811 © 2024 Generac Power Systems, Inc. All rights reserved. All specifications are subject to change without notice.

Part No. 0161970SBY
Rev. P 3/12/24

BATTERY CHARGER
10 amp

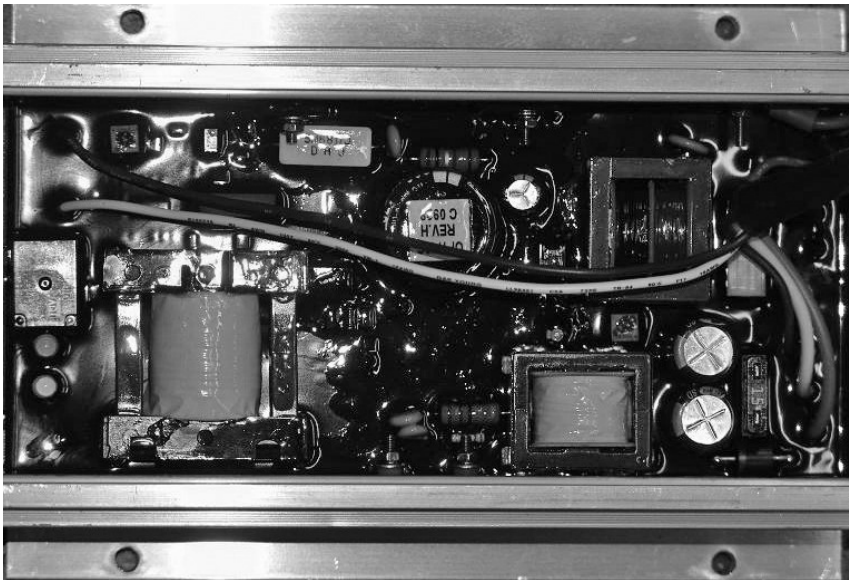

Battery charger shown from inside of control panel enclosure.
Connections are made via an attached harness.

The Generac 10 amp 12/24 volt battery charger is designed to work with Generac Industrial Controls and the G8601 to provide the ultimate in automatic battery voltage maintenance.

The 10 amp charger has automatic float and equalize control. It precisely monitors the battery's voltage and automatically activates the correct charging mode. The charge rate is limited and controlled to efficiently and safely maintain ideal battery levels under varying conditions.

The equalize system uses a control circuit to limit charging current to 10 amps. When battery voltage drops below a preset level, charging current increases to 5 amps and then to the 10 amp charge rate if needed. When the battery reaches maximum charge, the charger switches to float mode to supply just enough current to maintain the battery at or above 13/26 volts. Battery voltage and charging current are read at the control panel digital display.

Specifications	10A
Nominal Input	120 VAC
Operating AC Line Voltage Range	108 to 132 VAC
Input AC Line Frequency	50/60 Hz
Battery Fuse	15 A
Nominal Charge Rate	10 A
Equalize Voltage	13.8/27.6 V
Float Voltage	13.0/26.0 V
Current @ Equalize to Float Transition	5 A
Battery Under-voltage shutdown	11/22 V
LED Indicators	Yes
AC Line Voltage	Green LED
Battery Connected and Charging	Yellow LED
Battery Current Drain	30 mA
AC Line Connection	Connector Plug
Battery Connection	Connector Plug
Control Connection	AC Power Fail Form Relay Form C 2 A Rating
CUL Recognized	Yes
NFPA 110 Compliant	Yes
AGM Compatible	Yes
UL1236	Yes
CSA 22.2 No. 107	Yes

Generac Power Systems, Inc. | P.O. Box 8 | Waukesha, WI 53187
P: (262) 544-4811 © 2023 Generac Power Systems, Inc. All rights reserved. All specifications are subject to change without notice.

Part No.0191900SBY
Rev. G 11/30/23

BATTERY PAD WARMER

DESCRIPTION

Battery warmers are designed to keep batteries warm and ensure maximum engine cranking speed in cold climate installations. Warming pads are thermostatically controlled, UL listed and factory-wired. 120 VAC is supplied to the warming pad junction box via power cord plugged into a GFCI receptacle or hard-wired to a circuit breaker in a genset-mounted load panel (if equipped).

SPECIFICATIONS

- Power: 75W @ 120 VAC
- Current: 0.625A @ 120 VAC
- Heating Element Type: Wire-Wound
- Pad Material: Silicone Rubber/Fiberglass
- Thermostatic Control
- Open: 40°F, Close: 20°F
- Factory Installed and Wired
- UL Listed
- All Dimensions and Specification are Nominal
- Battery Warmer
- Dimensions: 254 X 152 MM (10 X 6 IN)

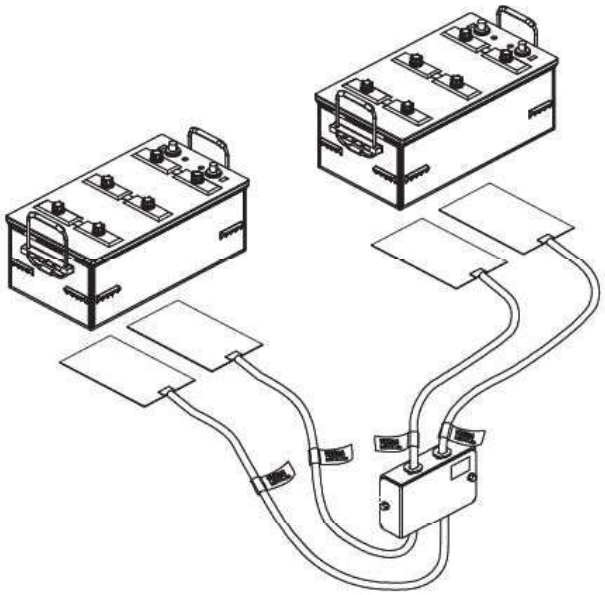

Typical 24V System

 ©2020 Generac Power Systems, Inc. All rights reserved. All specifications are subject to change without notice.

GENERATOR ENCLOSURES

DESCRIPTION

GENERAC POWER SYSTEMS' generator enclosures provide year-round weather protection for your power equipment. Engineered with functionality and value in mind, the enclosure design benefits are unique in that the enclosures utilize dimensionally matched components for either a weather protective configuration or a sound attenuated/acoustic configuration. With common components used between design, modification and on-site upgrades can be accomplished with ease.

The enclosure design offers several benefits over the "standard enclosures" of other manufacturers. Generac's enclosures have been created with the goal of maximizing the customer's product performance satisfaction while maintaining the functionality of reducing exterior noise levels and discouraging product tampering.

Although others may require a "premium" for a self-enclosed exhaust system, rugged steel panel construction or protective polyethylene washers under all exterior panel fasteners, Generac includes these and several other features on every enclosure configuration. Be sure to compare. Generac Enclosures offer additional design enhancement extras that other "standard enclosures" do not.

Doc No. 0163180SBY
Rev. E 06/10/19

GENERATOR ENCLOSURES

Post-Free Twin Doors
Provide Large, Unobstructed Service Access

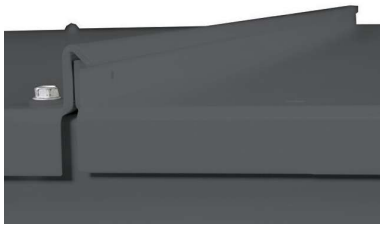

Gasket-Free, Interconnected Roof Panel Joint
Drip-Free, Maintenance-Free

Heavy Gauge, Stainless Steel, Partial Pin Hinges with Nylon Spacers
Durable, Corrosion-Free, Removable Doors

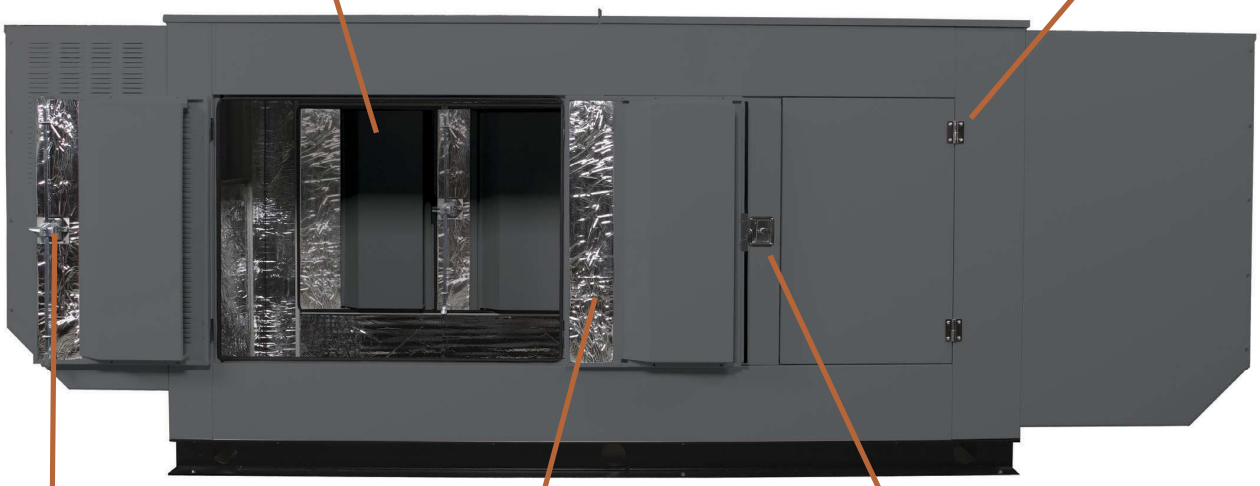

Two-Point Door Latch System
Ensures Proper Seal Preventing Water Ingress and Sound Egress

Dense, Closed-Cell Foam Insulation with Reflective Silver Mylar Layer
Improved Sound Attenuation Without Damaging Effects From Radiant Heat Exposure

Lockable Turn and Tuck Stainless Steel Latch Handle
Corrosion-Free, Non-Protruding and Secure

Doc No. 0163180SBY
Rev. E 06/10/19

GENERATOR ENCLOSURES

FEATURES:	BENEFITS:
Dimensional matching of acoustic and non-acoustic enclosure designs	Reduces variation in fuel tank pricing, inventory; removes need to change out fuel tank or retrofit
Standardized enclosure components *	Ease of retrofit or upgrade to acoustic system; reduced parts inventory, costs
Enclosure mounted directly to unit baseframe	Simplified delivery and installation with enclosure and unit in single component design
Electrostatically painted panels	Maximum protection from weather elements
12 or 14 gauge steel based on kW rating	Maximum sound attenuation, protection and product life
Aluminum Enclosure optional	Prevents corrosion in coastal regions
Stainless steel door latch and hinge hardware	Provides extended component life; maximum protection against rusting
Stainless steel door latch strike plate	Maximum protection against enclosure paint damage from door latch pin
Door hinges utilize slip-pin design	Provides quick door removal for full-unit access
Polyethylene gasketing under door hinges	Additional protection for enclosure paint finish
Keyed door latches	Protection for equipment and personnel
Large removable access doors	Ease of maintenance
Relocation of access doors	Provides improved access to MLCB on all units
Redesigned door gasketing	Improved sealing quality from sound and weather elements
Weather resistant aluminum roof design with drip ledge	Provides optimum moisture/rain runoff from unit
Cabled and gasketed radiator access cover	Provides improved radiator access and additional protection from weather elements
Acoustic roof panels manufactured with mechanical retention pins	Increased acoustic foam retention within unit
Polyethylene washers under all panel fasteners	Additional paint finish protection from stainless steel fastener
Internally fastened enclosure panels (where possible)	Provides streamlined unit appearance
Additional roof panel stiffener	Added overall compartment rigidity and acoustic foam panel retention
Self-enclosed exhaust system	Provides safe unit operation; no enclosure hot spots; streamlined unit appearance
Discharge air duct has been designed with minimal fasteners	Ease of removal and access to exhaust system
Stainless steel exhaust band clamps	Provides extended component life; ensures proper exhaust seal
Drain holes within air ducts	Enables maximum water run-off
Rodent-proof, tamper proof enclosure design	Safety and security for personnel and equipment
Redesigned baseframe lifting lugs	Ease of unit relocation; prevents compartment damage from lifting straps
Up to 200 MPH wind kit options (Contact Factory for Availability)	Meets locally enforced wind requirements

* Consult Generac Power Systems, Inc. for installation drawings for specific configurations and dimensions.

 © 2016 Generac Power Systems, Inc. All rights reserved. All specifications are subject to change without notice.

RhinoCoat™

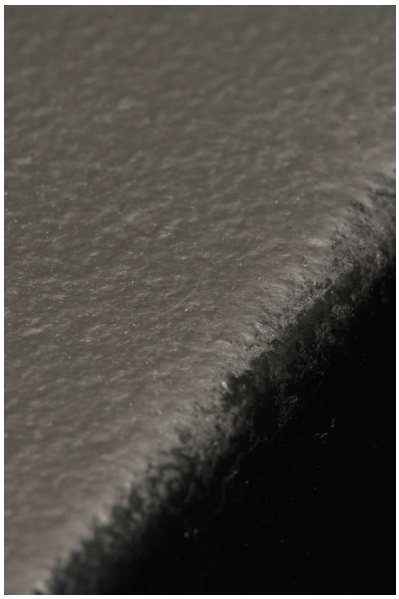

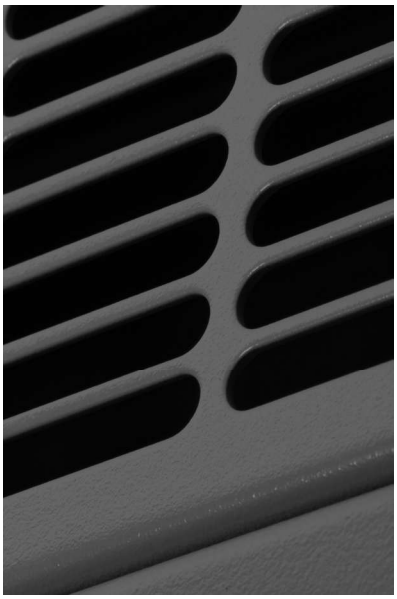

Generac's RhinoCoat™ finish system provides superior durability as a standard for all Generac Industrial enclosures, tanks and frames.*

Testing Standards

Generac's RhinoCoat™ finished surfaces are subjected to numerous tests. These include:

- ASTM D - 1186 - 87.....2.5+ MIL Paint Thickness
- ASTM D - 3363 - 92a.....Adequate Material Hardness
- ASTM D 522 - B.....Resistant to Cracking
- ASTM D 3359 - B.....Exceptional Adhesion
- ASTM B117 D 1654.....Resistant to Salt Water Corrosion
- ASTM D1735 D 1654.....Resistant to Humidity
- ASTM 2794 93 (2004).....Exceptional Impact Resistance
- SAEJ1690 - UV Specifications.....UV Protection

In addition to the testing standards above, Generac adds the following test requirements more specific to generator applications:

- Resistant to Typical Oils
- Resistant to Typical Fuels
- Resistant to Typical Antifreeze
- Resistant to Distilled Water

Primary Codes and Standards

*RhinoCoat™ powder coat paint is durable and corrosion resistant however it is not a rust preventative. Generac pretreats all powder coated parts to assist with resistance to corrosion.

 © 2019 Generac Power Systems, Inc. All rights reserved. All specifications are subject to change without notice.

LEVEL 1 SOUND ATTENUATED ENCLOSURE
G14.2L SG/MG250

MICROPHONE LOCATION	60Hz NO-LOAD, dB(A)									DISTANCE: 7 METERS
	OCTAVE BAND CENTER FREQUENCY (Hz)									
	31.5	63	125	250	500	1,000	2,000	4,000	8,000	dB(A)
FRONT	34	50	61	62	67	61	58	53	43	**75**
RIGHT	36	57	62	61	68	62	58	52	47	**73**
REAR	38	57	58	57	60	59	51	47	38	**70**
LEFT	40	54	62	60	70	63	59	55	44	**74**
AVERAGE	**37**	**55**	**61**	**60**	**66**	**61**	**56**	**51**	**43**	**73**

MICROPHONE LOCATION	60Hz FULL-LOAD, dB(A)									DISTANCE: 7 METERS
	OCTAVE BAND CENTER FREQUENCY (Hz)									
	31.5	63	125	250	500	1,000	2,000	4,000	8,000	dB(A)
FRONT	34	50	62	68	75	69	68	60	53	**80**
RIGHT	36	56	63	64	73	70	64	56	53	**77**
REAR	36	57	58	60	65	62	58	52	44	**75**
LEFT	37	56	64	64	69	67	68	57	53	**78**
AVERAGE	**36**	**55**	**62**	**64**	**70**	**67**	**65**	**56**	**51**	**77**

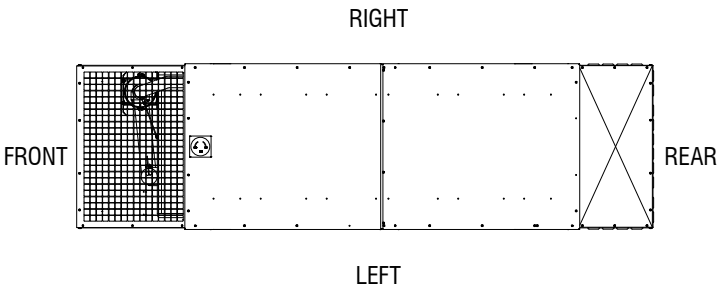

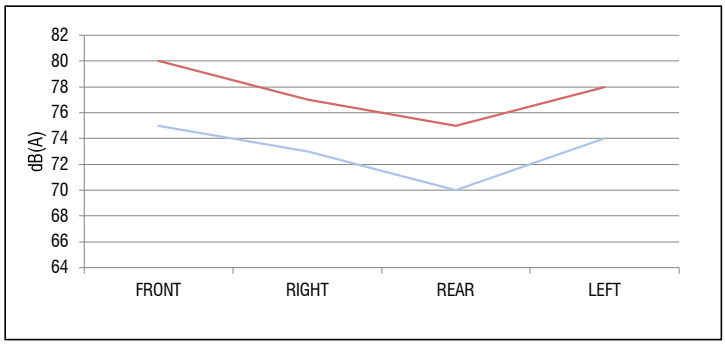

- All positions at 23 feet (7 meters) from side faces of generator set.
- Test conducted on a 100 foot diameter asphalt surface.
- Sound pressure levels are subject to instrumentation, installation and testing conditions.
- Sound levels are ±2 dB(A).

 © 2020 Generac Power Systems, Inc. All rights reserved. All specifications are subject to change without notice.

Part No. 0L1496B
Rev. C 04/08/20

12-POSTION LOAD CENTER
125A

Description

The 12 position 125A Load Center is a unit-mounted distribution panel for optional equipment on Generac generators that utilize the H-100 Panel, PM-GC, or PM-PC, and Power Zone® control systems. This main lug load center includes all of the circuit breakers required for the coolant heater, battery charger, and other factory-installed optional AC loads within the generator set, and serves as a convenient connection point for the customer's utility feed for those AC loads. All breakers are labeled for specific load circuits.

Specifications

- Available in 120/208 VAC or 120/240 VAC
- Siemens Part Number: SW1224L1125
- 125A Main Lug Load Center
- 100,000A IR
- Single Phase, Aluminum Bus
- UL Listed
- NEMA 3R
- Maximum of 12 Single Pole Breakers
- Maximum of 6 Two Pole 240V Breaker
- Dimensions: 21" L x 14.25" W x 3.88" D

Generac Power Systems, Inc. | P.O. Box 8 | Waukesha, WI 53187
P: (262) 544-4811 © 2020 Generac Power Systems, Inc. All rights reserved. All specifications are subject to change without notice.

Part No. 10000004898
Rev. B 5/11/2020

EATON POWER DEFENSE™ CIRCUIT BREAKER DATA PD4 FRAME

ELECTRONIC TRIP UNITS, PD4 FRAME
*PXR 10 - LSI Trip
*Modular, field-installable

PXR10 - LSI Trip

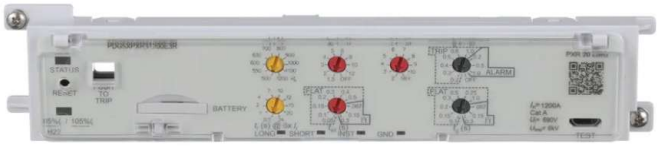

PXR20 - LSIG Trip

EATON#	Continuous Current Rating	
PDG4XPXR30800B2N	0800	LSI

Available Continuous Current (Ir) Settings on PXR Electronic Trip Units

Catalog Number Selection and Maximum Setting (In)

Option	Setting	800 A
PXR 10, PXR 20	1	320 A
	2	350 A
	3	400 A
	4	450 A
	5	500 A
	6	550 A
	7	600 A
	8	630 A
	9	700 A
	10 = In	800 A

THERMAL/MAGNETIC TRIP UNITS, PD4 FRAME

BREAKER-FRAME	CIRCUIT BREAKER RANGE (A)	WIRE TYPE	WIRE TEMPERATURE RATING	CIRCUIT BREAKER LUGAWGWIRE RANGE/(NUMBER OF CONDUCTORS)	TORQUETO WIRE	GENERAC #	EATON#
Power Defense - 4	800	Cu/Al	194°F (90°C)	3/0-400 (3)	375 in-lb (42.37 Nm)	A0002200439	PDG4X3TA800

ELECTRONIC TRIP UNITS, PD4 FRAME

BREAKER-FRAME	CIRCUIT BREAKER RANGE (A)	WIRE TYPE	WIRE TEMPERATURE RATING	CIRCUIT BREAKER LUGAWGWIRE RANGE/(NUMBER OF CONDUCTORS)	TORQUETO WIRE	GENERAC #	EATON#
Power Defense - 4	300-800	Cu/Al	194°F (90°C)	3/0-400 (3)	375 in-lb (42.37 Nm)	A0002200439	PDG4X3TA800

All breakers are rated 600V
All breakers are 3-Pole

 © 2024 Generac Power Systems, Inc. All rights reserved. All specifications are subject to change without notice.

TX301 Series Transfer Switch

800 — 1000 Amps

Service Entrance Rated ·Contactor Type ·Open and Delayed Transition

- Automatic Transfer Switch
- 800 – 1000A up to 600V VAC, 60 Hz, 100% current rated
- Single or Three Phase
- 2, 3, or 4 Poles
- NEMA 1 or 3R
- Open and Inphase or Open with Delayed Transition
- ETL Listed to UL 1008
- High Withstand and Closing Ratings

Image used for illustration purposes only

Codes and Standards

Not all codes and standards apply to all configurations. Contact factory for details.

cETL Listed

NFPA 70, 99, 110

NEC 700, 701, 702, 708

Description

Generac's patented* contactor type transfer switches are double-throw robust switch construction with inherent interlocks for safe positive transfer between power sources. The contacts are silver composite for long life, resisting pitting or burning. The switches are rated for full load transfers in mission critical, emergency, legally required, and optional power systems.

The microprocessor based controller provides the customers with the flexibility to program a comprehensive group of set points to match the application needs. The controller has two programmable inputs and one programmable output as standard and is available with an optional expansion board for up to four programmable inputs and outputs. The LCD displays real time and historical information with time-stamped events. The integrated plant exerciser can be configured in off, daily, day of week, biweekly, and monthly intervals with user selectable run time. Standard features of the controller include three phase sensing on both sources, phase unbalance, phase reversal, load shed, emergency inhibit, and communications.

*Patent Number: US 11,616,386 B2

TX301 Series Transfer Switch

800 — 1000 Amps

Service Entrance Rated ·Contactor Type ·Open and Delayed Transition

STANDARD FEATURES

GENERAL

- Floor Mounted, Wall Secured
- Cable Entry is Top or Bottom
- Double-Throw, Stored Energy Transfer Mechanism
- Can be Electrically Isolated while Energized
- Graphical LCD-Based Display for Programming, System Diagnostics and Help Menu Display Mimic
- Diagram with Source Available and Connected
- Method of Transfer: Open with Inphase Transition
- Mechanically Interlocked to Prevent Connection of Both Sources
- Modbus® RTU
- TXC 100 Controller
- Operating Temperature -4 ° to 158 °F (-20 ° to 70 °C)
- Removable Top and Bottom Plates for Ease of Entry
- Voltage Agnostic*
- High Withstand and Closing Ratings
- Auxiliary Input Includes: Permissive Inputs (24VDC)
- General Alarm Indication
- Remote Annunciator
- Time Delay in Neutral Transition (TDN)
- 3R Padlockable Cover for Controller
- Heater Option for Temperature and Humidity Control
- Expandable Input/Output Board Module Includes: 4 Relay Outputs and 4 Optically Isolated Inputs
- Kickplate Kit
- 2 Year Extended Limited Warranty

VOLTAGE AND FREQUENCY SENSING

- Three Phase Under and Over Voltage Sensing on Normal and Emergency Sources
- Under and Over Frequency Sensing on Normal and Emergency
- Selectable Settings: Single or Three Phase Voltage
- Sensing on Normal and Emergency 60 Hz
- Phase Sequence Sensing for Phase Sensitive Loads

START CIRCUIT

- 2-wire Start
- 3-wire Start from C Contact for Circuit Monitoring

DIGITAL OUTPUTS

- Switch Position Indication (2 Form C)
- Signal Before Transfer (Elevator)
- General Alarm
- Programmable Output

DIGITAL INPUTS

- Emergency Inhibit (Permissive & Load Shed)
- Go to Emergency
- Manual Generator Retransfer

CONTROLS

- Front Programmable Control Reduces PPE Needs and Arc Flash Hazard
- Built in Battery Backup – Increases Switch Reliability and Reduces Switch Transition Time to Alternate Source
- Battery Backup Able to Power the Controller for up to 60 Minutes in the Event of No Source Availability
- Generator Battery Backup for Controller
- Accessible USB Port for Easy Data Downloads, Firmware Updates without Requiring PPE, Reducing the Risk of Arc Flash
- All Amp Nodes Offered with Delayed Transition
- Heater Programmable through Control for Desired Temperature and Humidity Settings
- Front Accessible Customer Connections
- Time-Stamped Event History Log
- Programmable Exerciser – Daily, Weekly, Biweekly, Monthly

TX301 Series Transfer Switch

800 — 1000 Amps

Service Entrance Rated ·Contactor Type ·Open and Delayed Transition

UNIT DIMENSIONS*

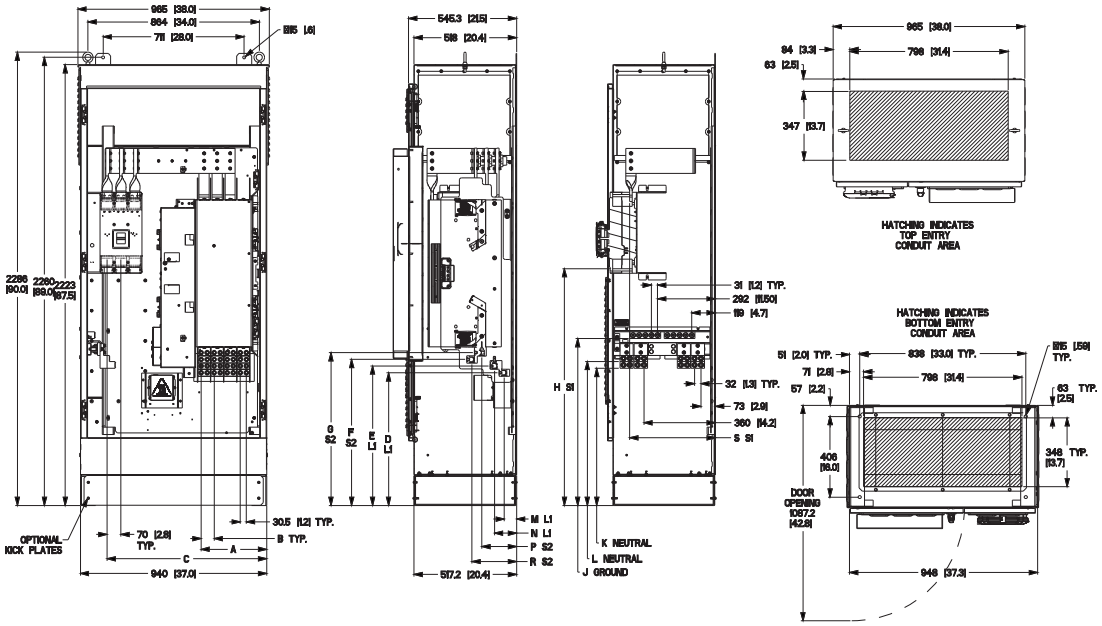

Service Entrance Rated, Contactor Type, Open and Delayed Transition		
Description		800A - 3 Pole
in (mm)	A (Dim)	13.0 (331)
	B (Dim)	2.6 (66)
	C (Dim)	31.7 (805)
	D (Dim)	26.4 (669)
	E (Dim)	27.3 (703)
	F (Dim)	29.0 (736)
	G (Dim)	30.3 (770)
	H (Dim)	47.1 (1195)
	J (Dim)	33.1 (841)
	K (Dim)	27.2 (691)
	L (Dim)	28.6 (726)
	M (Dim)	2.4 (62)
	N (Dim)	4.4 (111)
	P (Dim)	6.9 (175)
	R (Dim)	8.9 (175)
	S (Dim)	17.0 (432)

* All measurements are approximate and for estimation purposes only. Specification characteristics may change without notice. Please contact a Generac Power Systems Industrial Dealer for detailed installation drawings.

TX301 Series Transfer Switch

800 — 1000 Amps

Service Entrance Rated ·Contactor Type ·Open and Delayed Transition

UNIT DIMENSIONS*

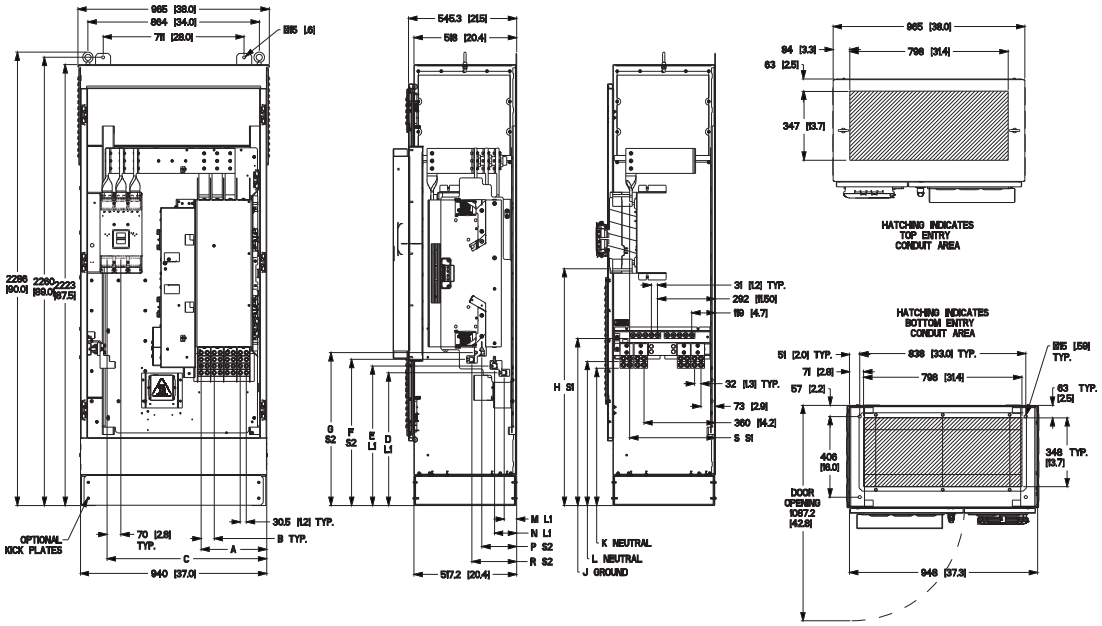

Service Entrance Rated, Contactor Type, Open and Delayed Transition		
Description		**800A 3 Pole**
Cu/Al	Normal 75 °C Wire**	(4) 500 - 4/0
	Normal Wire Lug Torque lb/in (Nm)	375 (42.4)
	Standby/Load Source 75 °C Wire	(4) 750 - 4/0
	Standby/Load Wire Lug Torque lb/in (Nm)	620 (70)
	Neutral Connection	(16) 750–1/0
	Neutral Wire Lug Torque lb/in (Nm)	500 (56.5)
	Ground Connection	(10) 600 - 4 or (20) 250 - 1/0
	Ground Wire Lug Torque lb/in (Nm)	375 (42.4)
lbs (kg)	Weight	3–Pole: 915 (415)

UL 1008 Withstand and Closing Ratings		
Ampere Rating	Service Entrance (kA)	Voltage
800	100	Up to 480

* All measurements are approximate and for estimation purposes only. Specification characteristics may change without notice. Please contact a Generac Power Systems Industrial Dealer for detailed installation drawings.
** Optional Lug Kit available for (3) 500 - 750 MCM; Torque: 450 in-lb (50.8).

©2024 Generac Power Systems, Inc. All rights reserved. All specifications are subject to change without notice.

Part No. A0002846631
Rev. C 1/19/2024

TX Series Transfer Switch

TXC-100

Automatic Transfer Switch Controller

- Automatic Transfer Switch Controller
- Up to 480 VAC, 50/60 Hz
- Single and Three Phase
- cETLus Recognized Component
- Tested to UL 1008

Image used for illustration purposes only

Codes and Standards

Not all codes and standards apply to all configurations. Contact factory for details.

cETLus Recognized per UL 1008

NFPA 37, 70, 99, 110

NEC 700, 701, 702, 708

Description

Generac's TXC-100 microprocessor based controller provides customers with the flexibility to program a comprehensive group of set points to match the application needs. The controller has 2 programmable inputs and 1 programmable output as standard and is available with an optional expansion board for up to 4 programmable inputs and outputs. The LCD displays real time and historical information with time-stamped events. The integrated plant exerciser can be configured in off, daily, day of week, biweekly, and monthly intervals with user selectable run time. Standard features of the controller include three phase sensing on both sources, phase unbalance, phase reversal, emergency inhibit, and communications.

TX Series Transfer Switch

TXC-100

Automatic Transfer Switch Controller

STANDARD FEATURES

GENERAL

- Graphical LCD-Based Display for Programming, System Diagnostics and Help Menu Display Mimic Diagram with Source Available and Connected LED Indicator
- Time-Stamped Event History Log
- Programmable Exerciser - Daily, Weekly, Bi-Weekly, Monthly
- Methods of Transfer Include: Open with Inphase Transition Only, Time Delay in Neutral Transition, or Inphase with a Default to Time Delay in Neutral Transfer
- Modbus® RTU Communications
- Operating Temperature -4 ° to 158 °F (-20 ° to 70 °C)
- Voltage Agnostic*
- Integrated Anti-condensation Heater Control
- Auxiliary Output Includes: 2WS, SB4T, Fault, and a Programmable Relay Output
- Auxiliary Input Includes: Permissive and Loadshed Inputs (24 VDC)
- Expandable Input/Output Board Module Includes: 4 Relay Outputs and 4 Optically Isolated Inputs
- Front Programmable Control Reduces PPE Needs and Arc Flash Hazard
- Built in Battery Backup - Increases Switch Reliability and Reduces Switch Transition Time to Alternate Source
- Rechargeable Lithium-ion Battery Backup Able to Power the Controller for up to 60 Minutes in the Event of No Source Availability
- Accessible USB Port for Easy Data Downloads, Firmware Updates without Requiring PPE, Reducing the Risk of Arc Flash
- All Amp Nodes Offered with Delayed Transition
- General Alarm Indication
- Heater Programmable through Control for Desired Temperature and Humidity Settings
- Front Accessible Customer Connections and Battery without Arc Flash Exposure
- Auxiliary Generator Battery Backup for Controller

VOLTAGE AND FREQUENCY SENSING

- Three Phase Under and Over Voltage Sensing on Normal and Emergency Sources
- Under and Over Frequency Sensing on Normal and Emergency
- Selectable Settings: Single or Three Phase Voltage
- Sensing on Normal, Emergency and Load 50 or 60 Hz
- Phase Sequence Sensing for Phase Sensitive Loads

PROGRAMMABLE I/O PARAMETERS

Outputs:

- Source 1 – Two Wire Start
- Source 2 – Two Wire Start
- Engine Exercising
- Engine Warmup
- Signal Before Transfer (Elevator Contact)
- General Alarm
- Source 1 Good
- Source 2 Good

Inputs:

- Permissive (Emergency Inhibit)
- Remote Engine Fast Test
- Remote Engine Normal Test
- ATS Timer
- Initiate Demand Response

Generac Power Systems, Inc. | P.O. Box 8 | Waukesha, WI 53189
P: (262) 544-4811 ©2020 Generac Power Systems, Inc. All rights reserved. All specifications are subject to change without notice.

Part No. A0000354456
Rev. A 06/18/2020

TX Series Transfer Switch

Remote Annunciator

Model G0070080 Remote Annunciator Panel

Description

The Remote Annunciator Panel provides remote monitoring and annunciation for a single TX Transfer switch with 11 LEDs. Works on all legacy TX Transfer Switches with the TXC-100 Control.*

This Remote Annunciator allows for ATS Transfer Test mode, and features a silence for existing alarm. Any new alarm will re-arm and the alarm horn will sound. Fault indication mirrors the TX fault indication and would indicate annunciator failure.

Communications to the TX is RS485.

All models require battery power (+12 or +24 VDC) sourced from the generator battery or other source.

The Remote Annunciator Panel complies with NFPA 99 and NFPA 110.

*When software is at version 1.23 or later.

Environmental Specifications

Operating Temperature	-25° C to 60° C
Humidity	0 to 95% Non-Condensing
Power Supply	+12 or +24 Volts DC
Power Usage	6 Watts Typical
RS485 Comunications	Fully Isolated Twisted Pair Cable with Shield
RS485 Length	4,000 ft (1,219 m)
Fault Relay Contact Rating	30 VDC, 1 Amp
Enclosure Rating	NEMA 1
Alarm Horn	90 dB @ 10 cm

TX Series Transfer Switch

Remote Annunciator

FEATURES

INDICATONS

- Comms OK
- Alarm/Fault
- Not in Auto
- Source 1 Available
- Source 1 Connected
- Source 2 Available
- Source 2 Connected
- Time Delay Active
- Exercise Active
- Loadshed Active
- Test Mode (ATS Transfer Test)

KEYBOARD BUTTONS

- ATS Transfer Test
- Silence Horn
- LED Lamp Test

AUDIBLE HORN CONDITIONS

- Comms Failure
- Alarm/Fault
- Not in Auto
- Loadshed Active

3R Cover Kit: G0098860

MOUNTING OPTIONS

Surface Mount Annunciator

The TX Remote Annunciator can mount to a flat surface with connections through the 0.812 inch diameter knockout on the back surface or through 0.812 inch diameter knockouts on sides as shown.

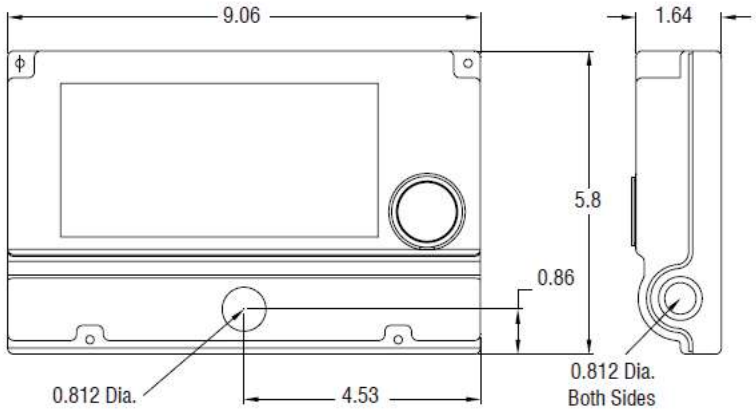

Generac Power Systems, Inc. | P.O. Box 8 | Waukesha, WI 53189
P: (262) 544-4811 ©2022 Generac Power Systems, Inc. All rights reserved. All specifications are subject to change without notice.

Part No. A0002366452
Rev. A 04/04/2022

FUEL SPECIFICATION
Natural Gas

Generac products are designed to run on natural gas and are tested for performance and reliability with clean, dry, pipeline quality natural gas. The properties presented in this standard represent the natural gas used in product testing. The performance and reliability of Generac products using non-conforming fuels are unknown and cannot be guaranteed.

Natural gas is, by definition, any gas that occurs organically, but this standard focuses on natural gas that intended for use as fuel in reciprocating internal combustion engines. This natural gas is generally assumed to have specific properties, but compositional differences and contaminates greatly influence the fuel's quality and combustion stability. This variation can lead to lower power output, pre-ignition, detonation, and corrosion if the fuel does not meet this standard. This standard identifies an acceptable fuel composition for use in Generac products.

Fuel Specifications

The fuel used by Generac is clean, dry, pipeline quality natural gas adhering to the following:

Component / Property	Unit	Range
Methane	% Volume	80 Minimum
Ethane	% Volume	0-10
Propane	% Volume	0-5
Butanes	% Volume	0-2
Pentanes and Heavier	% Volume	0-0.5
Nitrogen and Other Inerts	% Volume	0-3
Carbon Dioxide	% Volume	0-3
Total Diluents Gases	% Volume	0-5
Hydrogen Sulfide	g/100scf (mg/m3)	0.25-0.3 (6-7)
Total Sulfur	g/100scf (mg/m3)	5-20 (115-460)
Water Vapor	lb/MMscf (mg/m3)	4-7 (60-110)
High Heating Value	Btu/scf (kJ/m3)	950-1,150 (35,400-42,800)
Methane Number	MN	80 Minimum

Notes:
- The fuel must be free of liquid water and hydrocarbons at delivery temperature and pressure.
- The fuel must be free of particulate matter.

Hazards Information

Emergency Overview

DANGER!
EXTREMELY FLAMMABLE GAS - MAY CAUSE FLASH FIRE OR EXPLOSION!

High concentrations may exclude oxygen and cause dizziness and suffocation. Contact with pressurized vapor may cause frostbite or freeze burn.

NFPA 704 Hazard Identification System

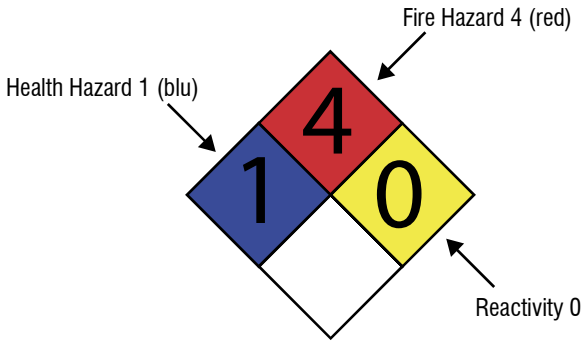

4 - Severe	3 - Serious	2 - Moderate	1 - Slight	0 - Minimal

Generac Power Systems, Inc. | P.O. Box 8 | Waukesha, WI 53187
P: (262) 544-4811 © 2020 Generac Power Systems, Inc. All rights reserved. All specifications are subject to change without notice.

Part No. A0000641394
Rev. A 4/8/2020

GAS SUPPLY CHECK LIST

- **Gas Service Meter and Serving Utility**
  - Available on site and reliable
  - Rated for the combined loading of the facility and the generator (total BTU)
  - Maintains generator minimum pressure requirements while under maximum loading
- **Step Down Pressure Regulators**
  - Selected for the pressure and flow needs of the generator
  - Direct acting type with good dynamic response (no significant time lags in regulation)
  - Selected for minimum no-load to full load pressure droop (< 1-2" w.c desired)
  - Located near the generator (allows the long piping runs to be at higher pressure)
  - Located at least 10' away from generator connection (avoids regulator oscillations)
  - Dedicated to a single generator (increases system reliability)
- **Piping**
  - Sized large enough to minimize pressure drops to acceptable levels under full gas flow
  - Minimize the number of elbows to avoid unwanted pressure drops
  - Ensure entire gas supply system maintains acceptable generator pressure under full gas flow conditions
  - Should be connected to generator with a flexible connection
  - Should include a drip leg (sediment trap)
- **LP**
  - LP tank's boil off rate (BTU capacity) needs to support rated BTU at minimum ambient
  - LP liquid withdrawal systems should be considered: cold ambients, small tanks, large generators
  - LP liquid systems require pressure rated piping and vaporization outside a building
- **Generac Design Resources**
  - "Installation Guidelines for Stationary Industrial Generators" manual 046622 (detailed information)
  - "Power Design Pro" software -- mechanical design tab (gas piping pressure drop calculator)
- **National Codes and Standards**
  - NFPA 37 "Installation and use of Stationary Combustion Engines"
  - NFPA 54 "National Fuel Gas Code"
  - NFPA 58 "LP Gas Code"

Generac Power Systems, Inc. | P.O. Box 8 | Waukesha, WI 53187
P: (262) 544-4811 © 2019 Generac Power Systems, Inc. All rights reserved. All specifications are subject to change without notice.

Part No. 10000002132
Rev. C 11/15/19

SH	REV	WINDCHILL VERSION
1/1	B	B.2

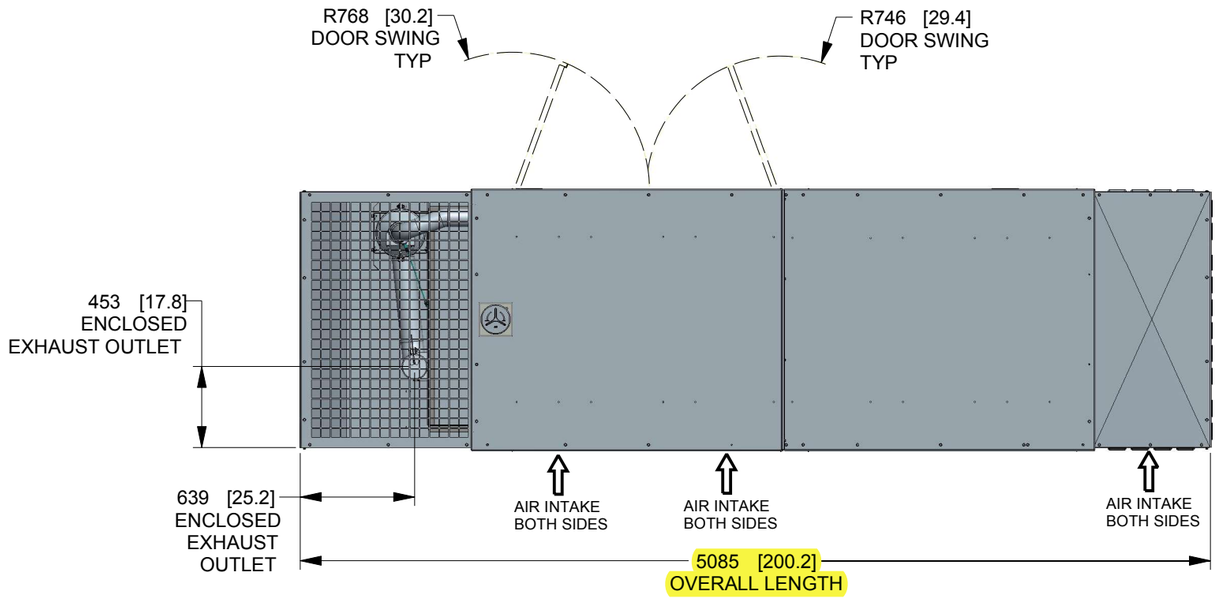

FOR ALL STUB-UP, WEIGHT, AND C.O.G. DETAILS, SEE
CORRESPONDING OPEN SET DRAWING PER UNIT CONFIGURATION

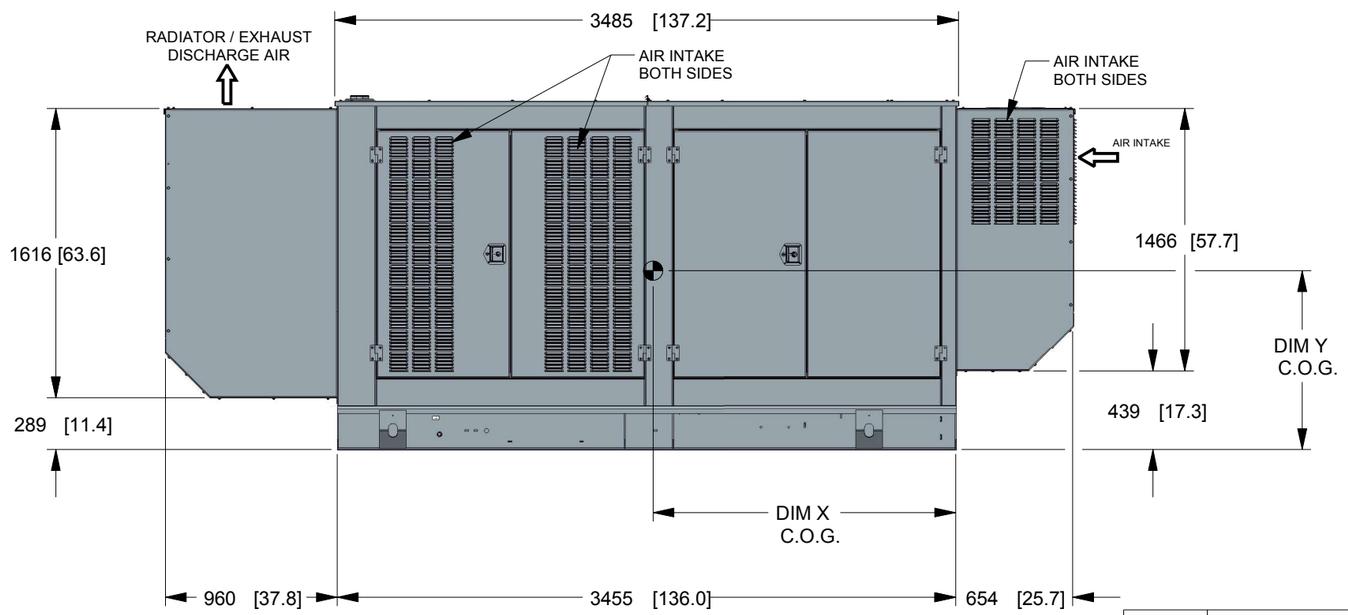

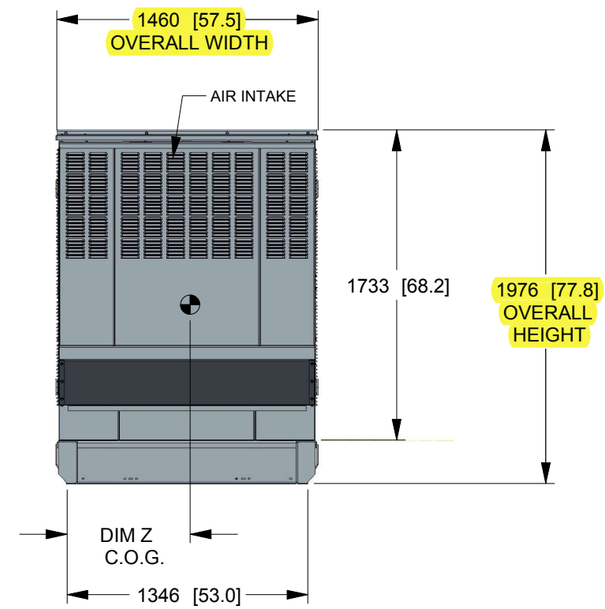

60Hz	SG/MG 230, 250 PG/WG 184, 200
60Hz	SG 275; PG220; SG300; PG270; MG300
50Hz	SG/MG 184, 200 PG/WG 147, 160
50Hz	SG 220; PG198; SG240; PG216

DIMENSIONS ARE IN MILLIMETERS [INCHES]

DRAWING CREATED FROM PRO/ENGINEER
3D FILE. ECO MODIFICATION TO BE
APPLIED TO SOLID MODEL ONLY.

INSTALLATION DRAWING

GENERAC POWER SYSTEMS OWNS THE COPYRIGHT OF THIS DRAWING WHICH IS SUPPLIED IN CONFIDENCE AND MUST NOT BE USED FOR ANY PURPOSE OTHER THAN FOR WHICH IT IS SUPPLIED WITHOUT THE EXPRESS WRITTEN CONSENT OF GENERAC POWER SYSTEMS.
©GENERAC POWER SYSTEMS 2013

ELECTRONICALLY APPROVED
INSIDE WINDCHILL

GENERAC

TITLE
L1A ENCLOSURE
G14.2L

ISSUE DATE: 11/26/14			
SIZE B	CAGE NO N/A	DWG NO 0L0469B	REV B
SCALE 0.030	WT-KG 0.000	SHEET 1 of 1	

Notes:
1. CONTROL PANEL, (OPTIONAL BATTERY CHARGER INSIDE).
2. 120V, 20A GFCI & 250V, 15A OUTLET (OPTIONAL).
3. CONNECTION POINTS FOR CONTROL WIRES PROVIDED IN THE LOW VOLTAGE CONNECTION BOX (USE LOW VOLTAGE STUB-UP AREA).
4. BATTERIES (24 VOLT NEGATIVE GROUND SYSTEM).
5. MAIN LINE CIRCUIT BREAKER (MLCB), AC LOAD LEADS & NEUTRAL CONNECTIONS (DIMENSIONS MAY VARY DUE TO UNIT CONFIGURATION)
6. CENTER OF GRAVITY AND WEIGHT MAY CHANGE DUE TO UNIT OPTIONS. FOR WEIGHT AND CENTER OF GRAVITY DATA SEE NOTE 6, AND SHEET 4,5.
7. ENGINE SERVICE CONNECTIONS:
   INLET NATURAL GAS = 2-1/2" NPT FEMALE COUPLING
   OIL DRAIN = 1/2" NPT FEMALE COUPLING
   RADIATOR DRAIN = 3/8" BARB FITTING (ON RADIATOR)
   FLEX PIPE OUTLET = 3.5" ANSI CLASS 125#/150#
   CATALYST INLET/OUTLET = 5.0" ANSI CLASS 125#/150#
   ELBOW INLET = 3.5" ANSI CLASS 125#/150#
   ELBOW OUTLET = 5.0" ANSI CLASS 125#/150#

***** SEE GENERATOR SIZING GUIDE FOR FUEL PIPE SIZING TO SUIT APPLICATION *****

8. AUXILARY AC CONNECTION FOR UNIT OPTIONS ARE LOCATED IN HIGH VOLTAGE CONNECTION BOX, UNLESS AN OPTIONAL LOAD CENTER IS INSTALLED.
9. EXHAUST MAY BE ROTATED TO ALLOW CATALYST SILENCER TO POINT OUT TO THE RIGHT OR LEFT SIDE OF GENERATOR.
10. GENERATOR SET MUST BE INSTALLED SUCH THAT FRESH COOLING AIR IS AVAILABLE AND DISCHARGE AIR FROM THE RADIATOR IS NOT RECIRCULATED. SEE SPEC SHEET FOR MIN AIR FLOW AND MAX RESTRICTION REQURIEMENTS.
11. BOTTOM OF GENERATOR SET MUST BE ENCLOSED TO PREVENT PEST INTRUSION AND RECIRCULATION OF DISCHARGE AIR AND/OR IMPROPER COOLING AIR FLOW.
12. EXHAUST SYSTEM MAXIMUM BACK PRESSUE = 10" H2O POST SILENCER.
13. IF USED, INSTALL EXHAUST BLANKETS (SUPPLIED BY OTHERS) ALONG THIS LINE. O2 SENSOR TO BE PLACED THIS DISTANCE FROM THE TURBO FLANGE. BLANKETS MUST HAVE MINIMUM CONTINUOUS OPERATING TEMPERATURE OF 1500°F [816°C].
14. CONNECT THE OPEN SET EXHAUST PER NFPA 37.
15. BLANKETS SHOULD NOT COVER OXYGEN SENSOR.
16. OXYGEN SENSOR MUST BE MOUNTED BETWEEN ENGINE OUTLET AND CATALYST INLET AS SHOWN. IF ELBOWS ARE REQUIRED, ONLY TWO ELBOWS PER EXHAUST LINE MAY BE USED. OXYGEN SENSOR MUST BE LOCATED AT LEAST 508MM [20IN] DOWNSTREAM OF ANY ELBOW. PIPES WITH SMALLER DIAMETERS THAN THOSE OF THE PIPES PROVIDED MAY NOT BE USED.
17. CATALYST SILENCER (FOR EPA UNITS) MUST BE MOUNTED IN DESCRIBED POSITION. FAILING TO FOLLOW THESE INSTRUCTIONS WHEN INSTALLING A CERTIFIED ENGINE IN A PIECE OF STATIONARY EQUIPMENT VIOLATES FEDERAL LAW 40 CFR 1068.105(b), SUBJECT TO FINES OR PENALTIES AS DESCRIBED IN THE CLEAN AIR ACT.
18. BOLTS OR STUDS USED TO MOUNT UNIT TO PAD SHALL BE 5/8 - 11 GRADE 5.
19. IT IS THE RESPONSIBILITY OF THE INSTALLATION TECHNICIAN TO ENSURE THAT THE GENERATOR INSTALLATION COMPLIES WITH ALL APPLICABLE CODES, STANDARDS AND REGULATIONS.

TABLE 1

DIM	OPEN SET, L1A, L2A ENCLOSED	L3A ENCLOSED
A	486 [19.1]	731 [28.8]
B	2660 [104.7]	2803 [110.4]
C	2550 [100.4]	2626 [103.4]
D	2455 [96.7]	2531 [99.6]

TABLE 2

DIM	SINGLE (SG/PG)	MULTIPLE (MG/WG)
E	644 [25.3]	977 [38.5]
F	661 [26.0]	429 [16.9]

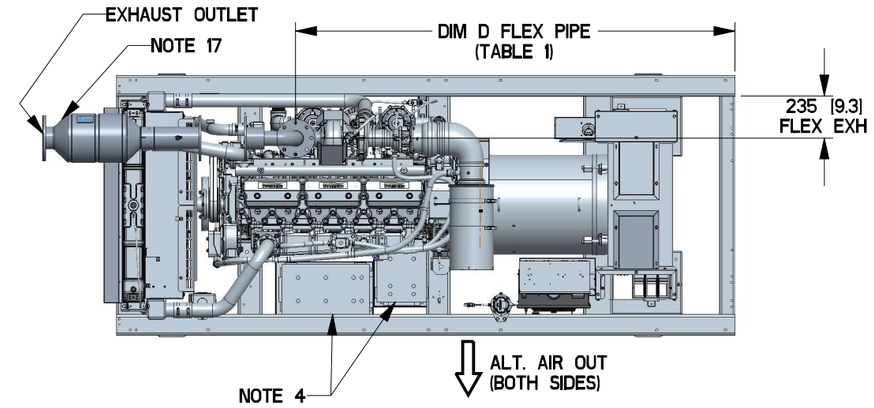

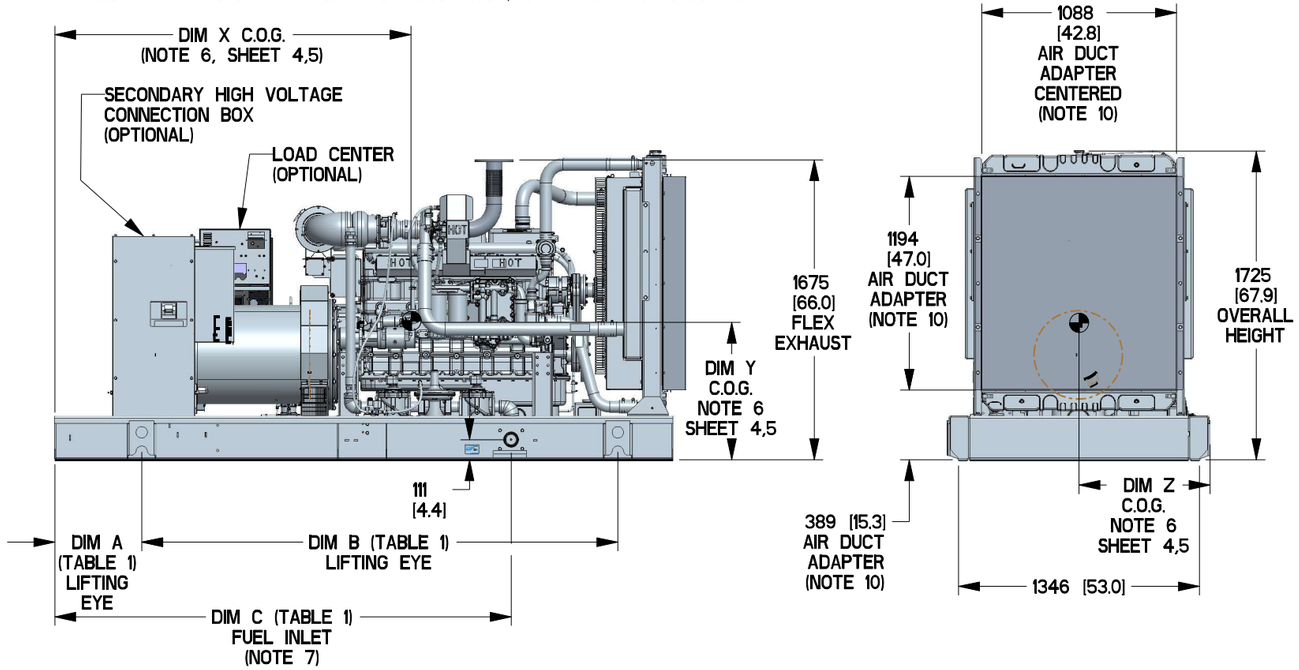

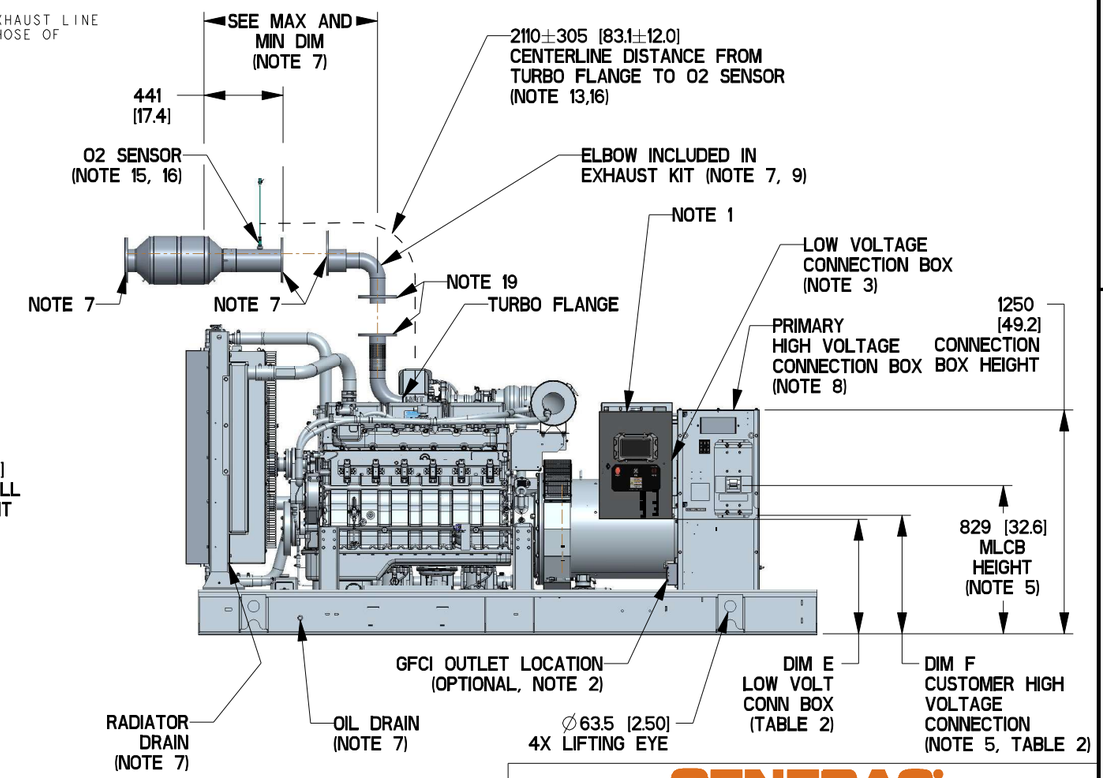

DRAWING CREATED FROM PRO/ENGINEER 3D FILE. ECO MODIFICATION TO BE APPLIED TO SOLID MODEL ONLY.

DIMENSIONS ARE IN MILLIMETERS [INCHES]

INSTALLATION DRAWING

GENERAC POWER SYSTEMS OWNS THE COPYRIGHT OF THIS DRAWING WHICH IS SUPPLIED IN CONFIDENCE AND MUST NOT BE USED FOR ANY PURPOSE OTHER THAN FOR WHICH IT IS SUPPLIED WITHOUT THE EXPRESS WRITTEN CONSENT OF GENERAC POWER SYSTEMS.
© GENERAC POWER SYSTEMS 2013

ELECTRONICALLY APPROVED INSIDE WINDCHILL

GENERAC

TITLE
OPEN SET
G14.2L
SG250

ISSUE DATE: 11/26/14

SIZE	CAGE NO	DWG NO	REV
B	N/A	10000039616	E

SCALE 0.016 | WT-KG | SHEET 1 of 5

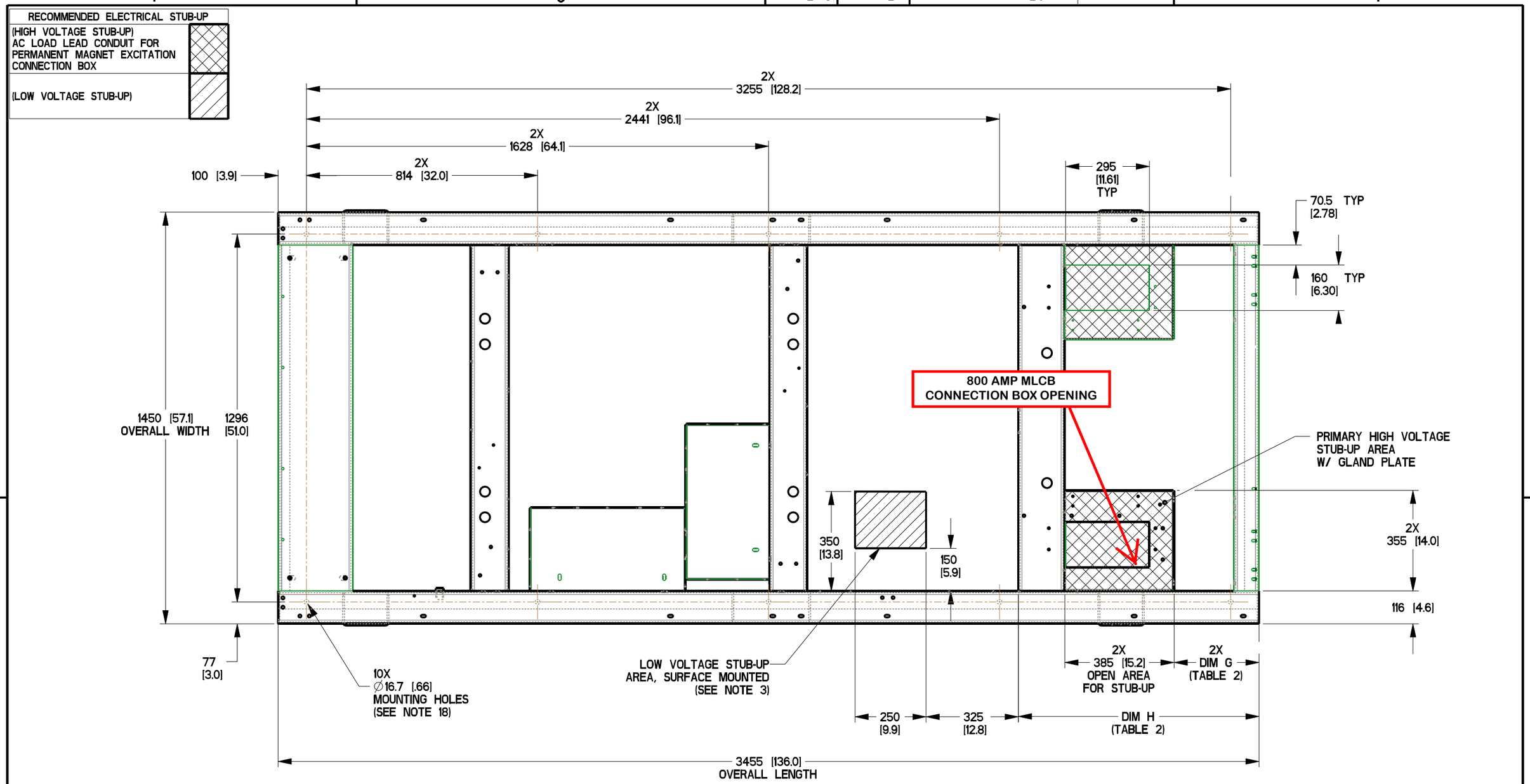

TABLE 2		
MODEL	DIM G	DIM H
SG/MG 230/250/275/300	299 [11.8]	848 [33.4]
SG/MG 275/300 UPSIZE	199 [7.8]	748 [29.4]

DRAWING CREATED FROM PRO/ENGINEER 3D FILE. ECO MODIFICATION TO BE APPLIED TO SOLID MODEL ONLY.

DIMENSIONS ARE IN MILLIMETERS [INCHES]

INSTALLATION DRAWING

GENERAC POWER SYSTEMS OWNS THE COPYRIGHT OF THIS DRAWING WHICH IS SUPPLIED IN CONFIDENCE AND MUST NOT BE USED FOR ANY PURPOSE OTHER THAN FOR WHICH IT IS SUPPLIED WITHOUT THE EXPRESS WRITTEN CONSENT OF GENERAC POWER SYSTEMS.
© GENERAC POWER SYSTEMS 2013

ELECTRONICALLY APPROVED INSIDE WINDCHILL

GENERAC

TITLE
STUB-UP VIEW
G14.2L
SG250

ISSUE DATE: 11/26/14

SIZE	CAGE NO	DWG NO	REV
B	N/A	10000039616	E

SCALE 0.075 | WT-KG | SHEET 2 of 5

L1A ENCLOSURE, STEEL

MODEL	VOLTAGE	WEIGHT	CENTER OF GRAVITY DIM X	CENTER OF GRAVITY DIM Y	CENTER OF GRAVITY DIM Z
SG250	208 VOLT	3,596 kg [7,928 lbs]	1,904 [75.0]	833 [32.8]	636 [25.0]

NOTE:
CENTER OF GRAVITY AND WEIGHT MAY CHANGE DUE TO UNIT OPTIONS

DRAWING CREATED FROM PRO/ENGINEER 3D FILE. ECO MODIFICATION TO BE APPLIED TO SOLID MODEL ONLY.

INSTALLATION DRAWING

GENERAC POWER SYSTEMS OWNS THE COPYRIGHT OF THIS DRAWING WHICH IS SUPPLIED IN CONFIDENCE AND MUST NOT BE USED FOR ANY PURPOSE OTHER THAN FOR WHICH IT IS SUPPLIED WITHOUT THE EXPRESS WRITTEN CONSENT OF GENERAC POWER SYSTEMS.
© GENERAC POWER SYSTEMS 2013

ELECTRONICALLY APPROVED
INSIDE WINDCHILL

GENERAC

TITLE
WEIGHT & CENTER OF GRAVITY
G14.2L
SG250

ISSUE DATE: 11/26/14

SIZE	CAGE NO	DWG NO	REV
B	N/A	10000039616	E

SCALE N/A | WT-KG | SHEET 4 of 5

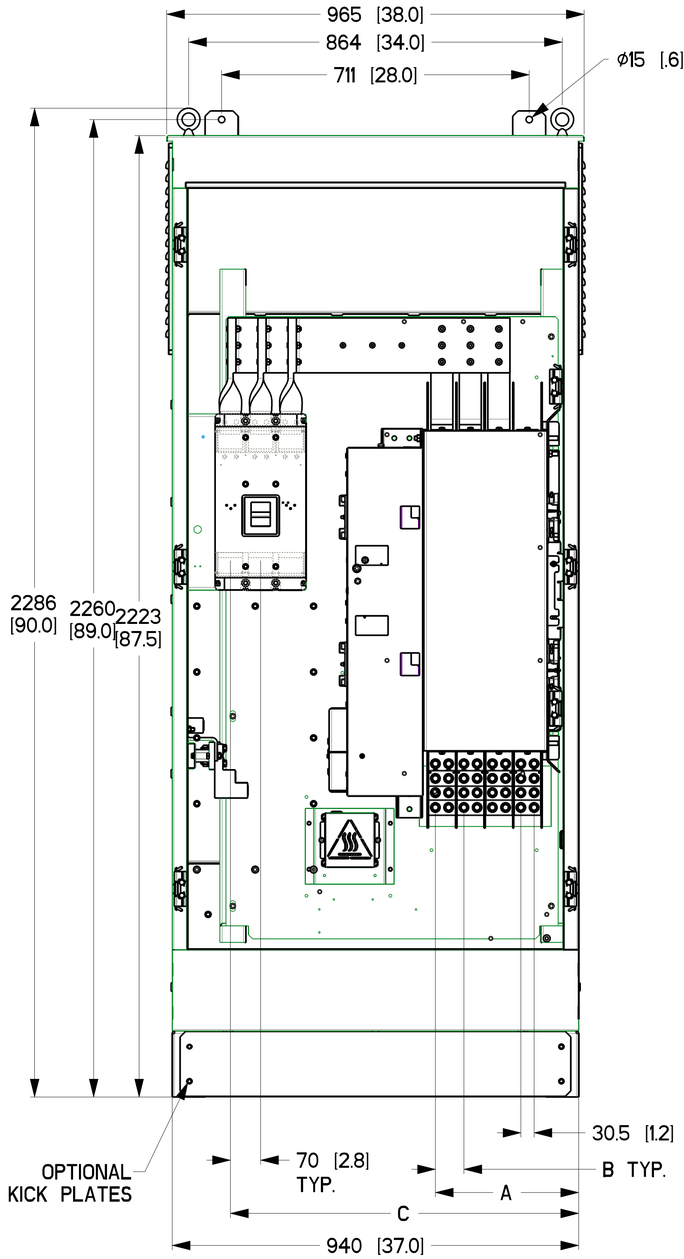

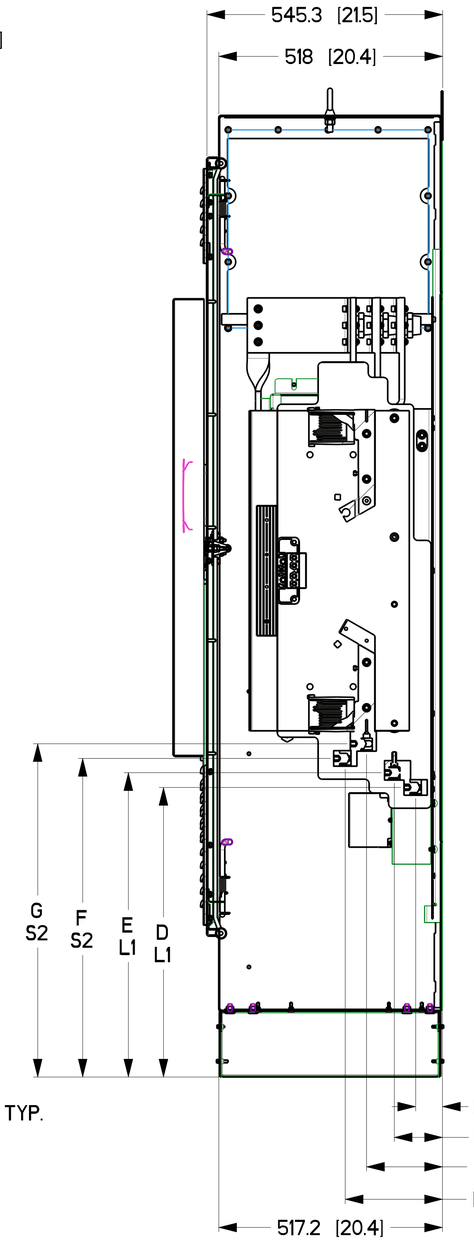

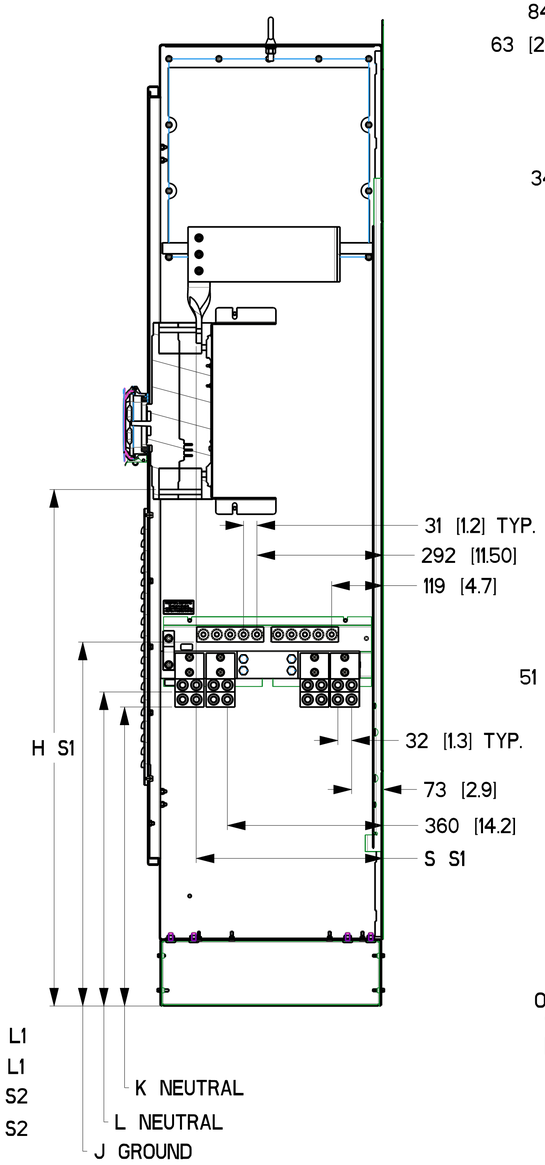

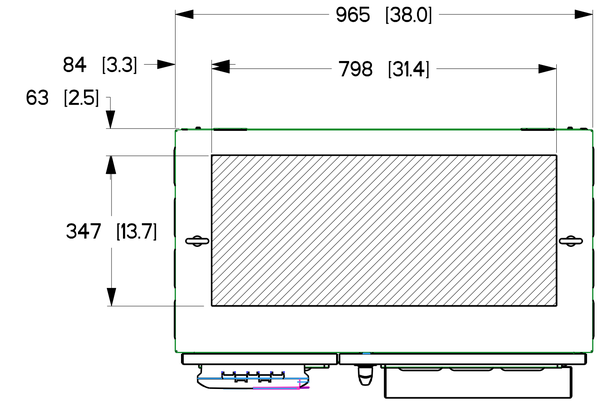

HATCHING INDICATES
TOP ENTRY
CONDUIT AREA

HATCHING INDICATES
BOTTOM ENTRY
CONDUIT AREA

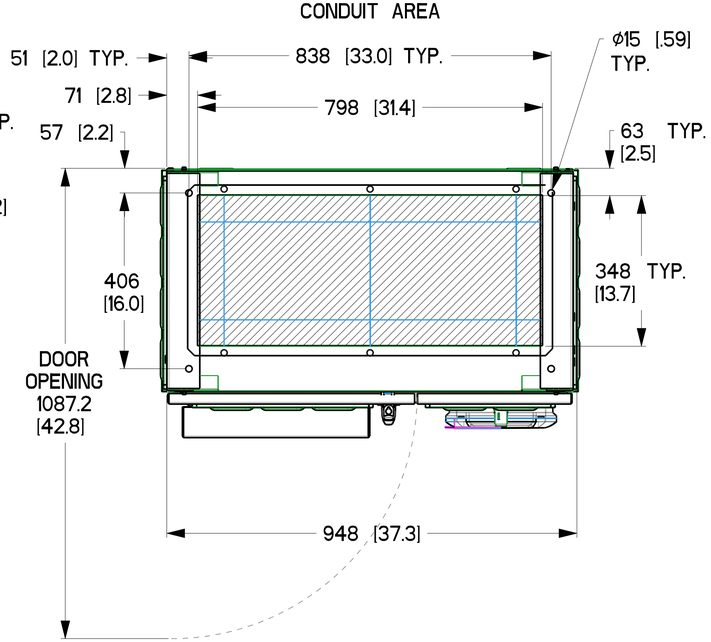

DESCRIPTION	DIM "A"	DIM "B"	DIM "C"	DIM "D"	DIM "E"	DIM "F"	DIM "G"	DIM "H"	DIM "J"	DIM "K"	DIM "L"	DIM "M"	DIM "N"	DIM "P"	DIM "R"	DIM "S"
800 SERVICE ENTRANCE	331 (13.0)	66 (2.6)	805 (31.7)	669 (26.4)	703 (27.3)	736 (29.0)	770 (30.3)	1195 (47.1)	841 (33.1)	691 (27.2)	726 (28.6)	62 (2.4)	111 (4.4)	175 (6.9)	225 (8.9)	432 (17.0)

NORMAL LUGS - WIRE SIZE: (4) 500mcm-4/0 - TORQUE: 375 in-lbs
STANDBY/LOAD LUGS - WIRE SIZE: (4) 750MCM-4AWG - TORQUE: 620 in-lbs
NEUTRAL LUGS - WIRE SIZE: (16) 750MCM-1/0 - TORQUE: 500 in-lbs
GROUND LUGS - WIRE SIZE: (10) 600MCM-2AWG OR (20) 250MCM-1/0 - TORQUE: 375 in-lbs

SWITCH WEIGHT: NEMA 1 990 lbs, NEMA 3R 992 lbs

DRAWING CREATED FROM PRO/ENGINEER 3D FILE. ECO MODIFICATION TO BE APPLIED TO SOLID MODEL ONLY.

INSTALLATION DRAWING

ELECTRONICALLY APPROVED INSIDE WINDCHILL

GENERAC

TITLE
INSTALLATION DRAWING
800-1000A SE
NEMA 1,3R

ISSUE DATE:

SIZE	CAGE NO	DWG NO	REV
D	N/A	A0002852073	C

SCALE 0.145 | WT-KG:87931546172 | SHEET 1 of 1

COMPONENTS LOCATED ON CONTROL PANEL DOOR

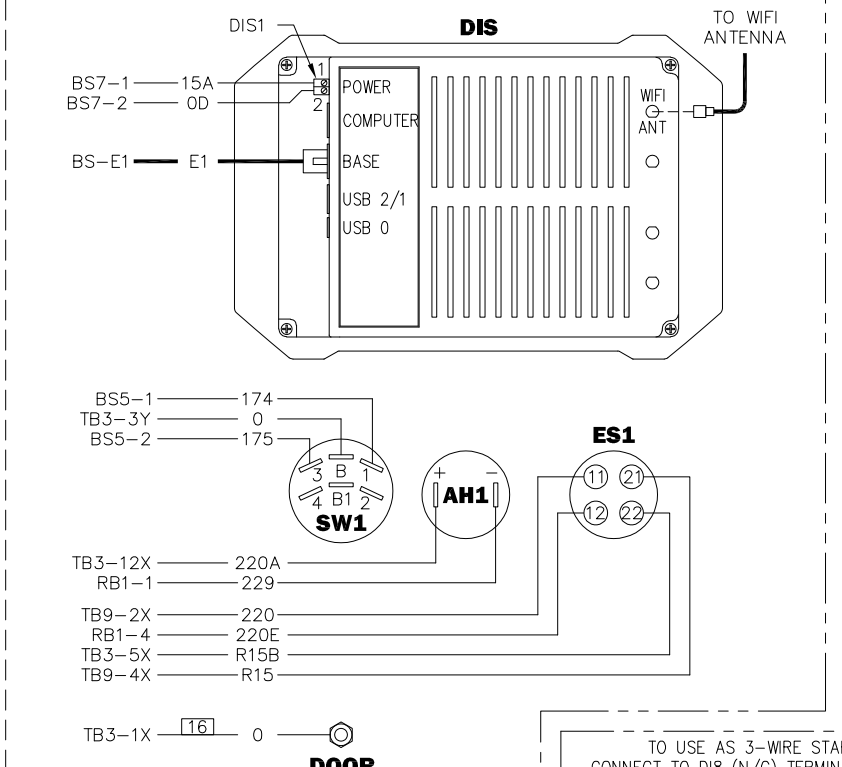

COMPONENTS LOCATED IN LOW VOLTAGE CUSTOMER CONNECTION PANEL

NOTE:
REMOVE TERMINAL BLOCK JUMPERS WHEN INSTALLING REMOTE E-STOP.

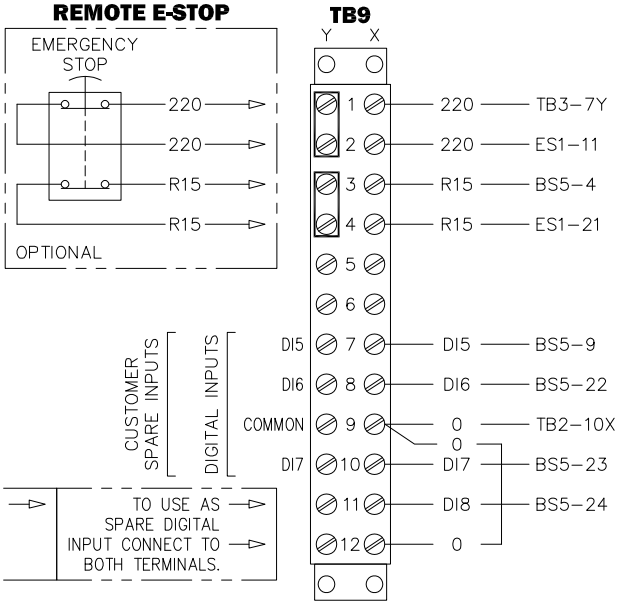

TO USE AS 3-WIRE START CONNECT TO DI8 (N/C) TERMINAL ONLY. USED IN CONJUNCTION WITH 0 (COM) & 183 (N/O) ON TB1.

TO USE AS SPARE DIGITAL INPUT CONNECT TO BOTH TERMINALS.

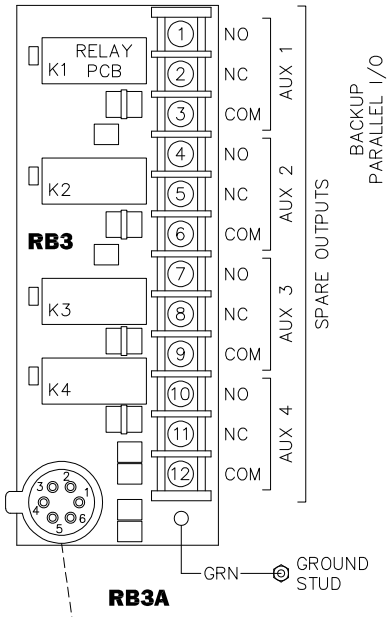

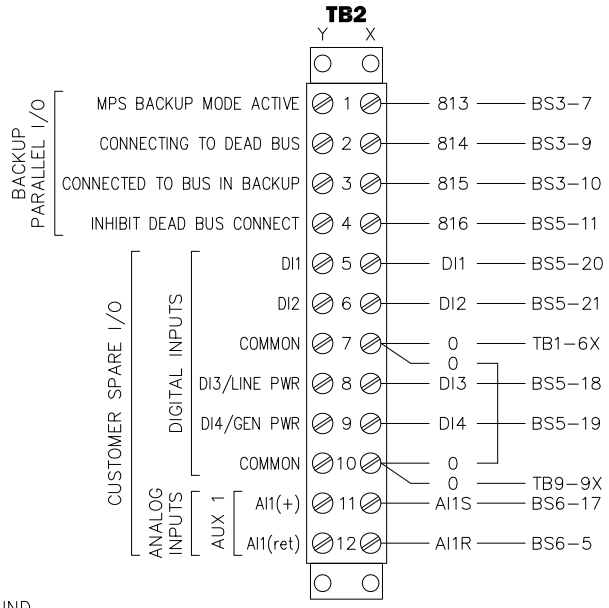

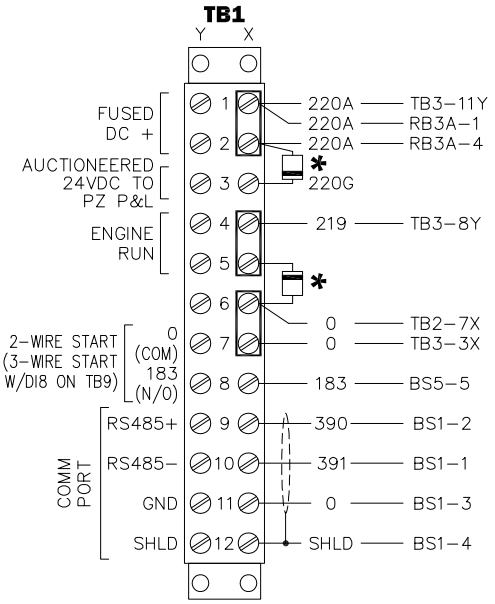

NOTE:
FOR FIELD WIRING TO CUSTOMER CONNECTIONS (TERMINAL STRIPS AND RELAY BOARDS)
MAXIMUM WIRE SIZE: #14 AWG
RECOMMENDED TIGHTENING TORQUE: 12 LB-IN

*NOTE: 6A, 600V DIODE
LINE OF DIODE (CATHODE) MUST BE ORIENTATED THE SAME AS IN THE DRAWING.

RB3A

1	220A	TB1-1X
2	OC20	BS3-17
3	OC21	BS3-18
4	220A	TB1-2X
5	OC22	BS3-19
6	OC23	BS3-20

COMPONENTS LOCATED IN CONTROL PANEL
LEFT SIDE

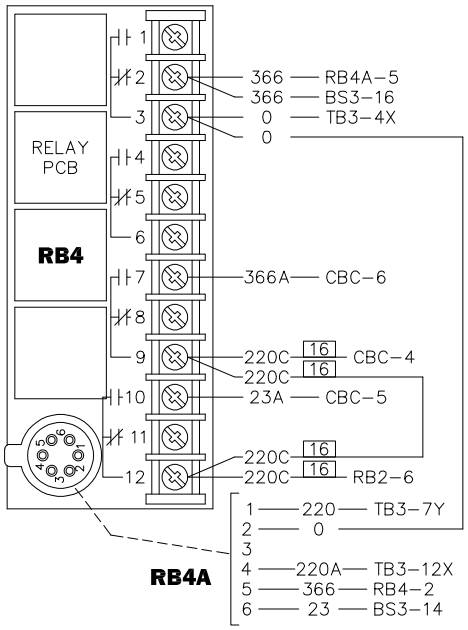

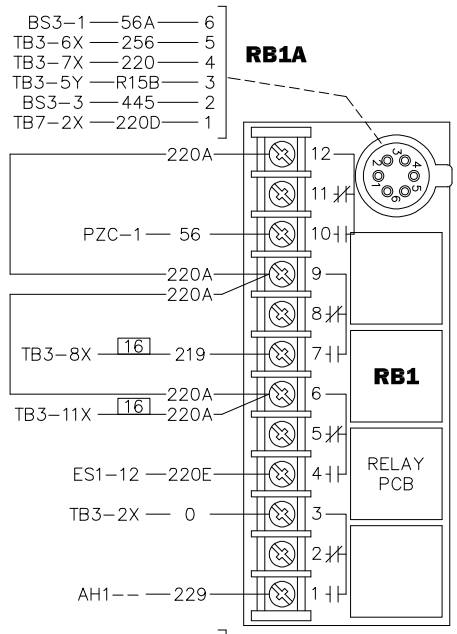

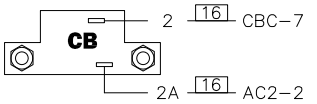

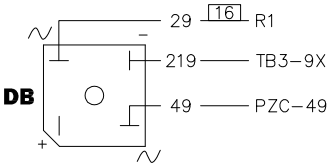

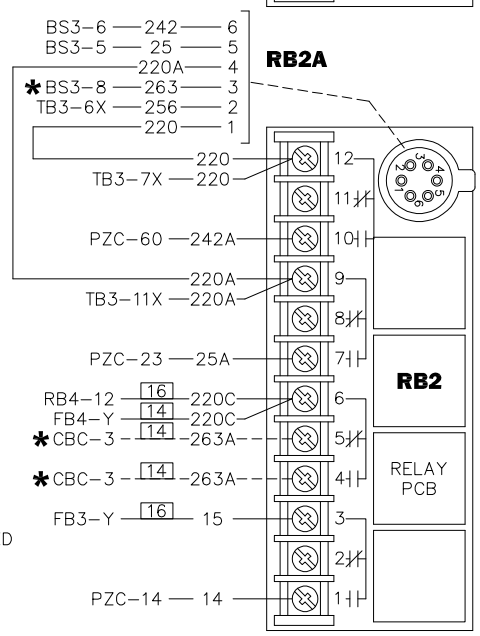

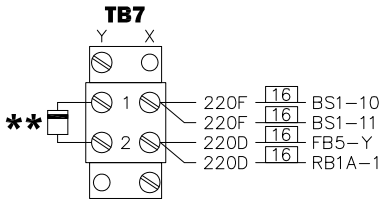

**NOTE: 6A, 600V DIODE
LINE OF DIODE (CATHODE) MUST BE ORIENTATED THE SAME AS IN THE DRAWING.

*NOTES:
1. WIRE 263A IS WIRED TO RB2–5 WHEN SHUNT TRIP IS INSTALLED IN MLCB.
2. WIRE 263A IS WIRED TO RB2–4 WHEN UVR IS INSTALLED IN MLCB.
3. BS3–8 OUTPUT NEEDS TO BE ADJUSTED WHEN UVR IS INSTALLED IN MLCB.

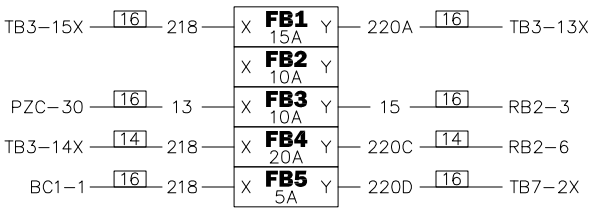

PAGE 7 OF 14

COMPONENTS LOCATED IN CONTROL PANEL RIGHT SIDE

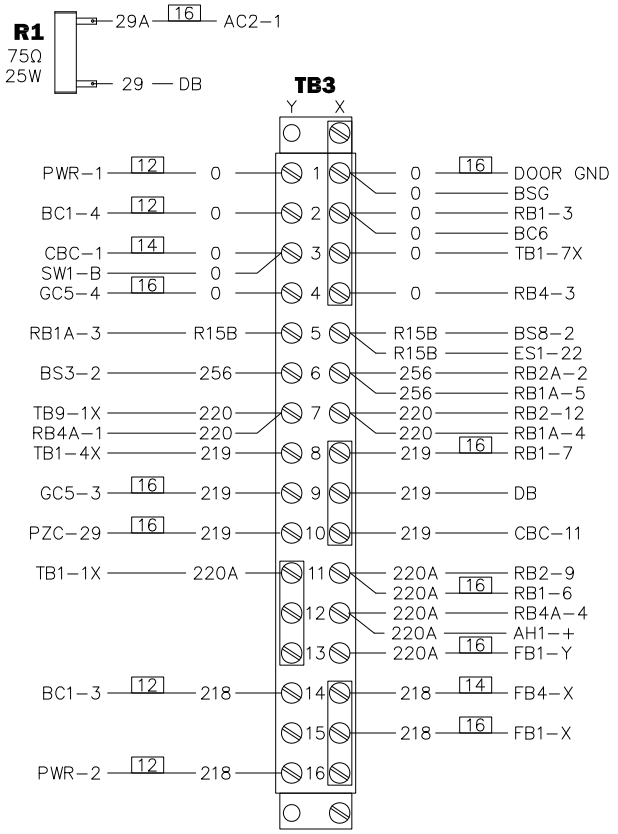

COMPONENTS LOCATED IN CONTROL PANEL

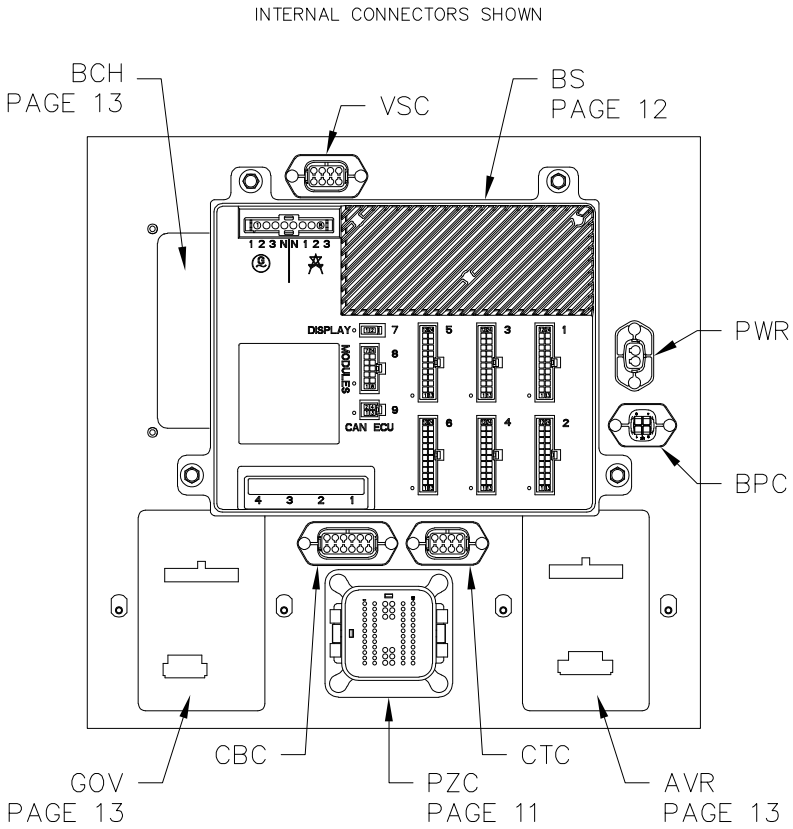

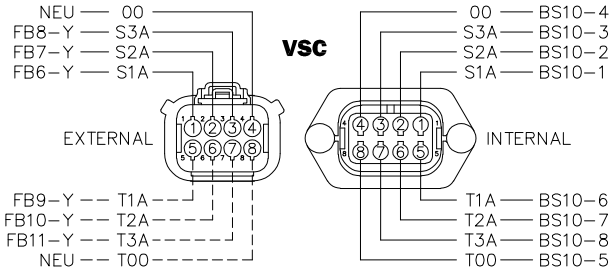

NOTE: THE DASHED WIRES IN CONNECTORS VSC AND CBC ARE POPULATED PER MPS APPLICATION.

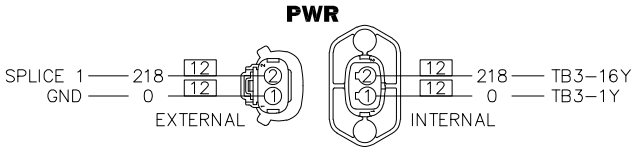

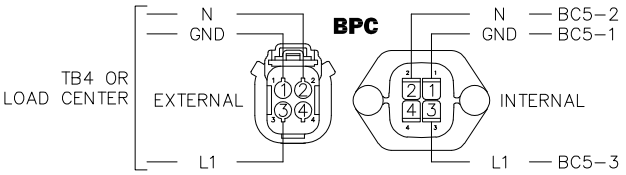

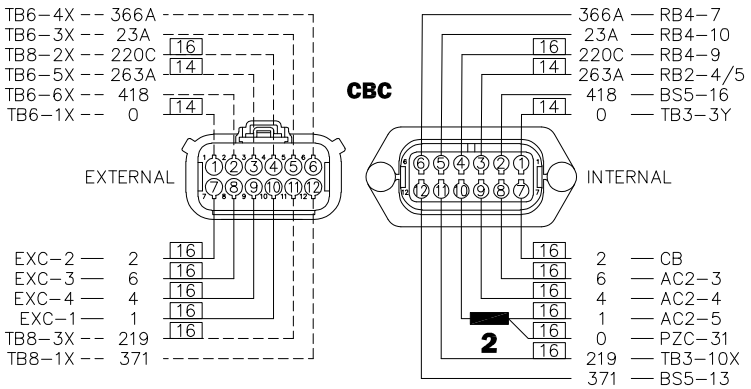

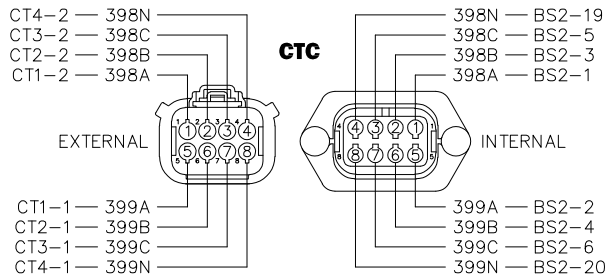

COMPONENTS LOCATED IN CONTROL PANEL

PIN	WIRE	FROM	TO
1	56	RB1–10	SC
2	804	BS4–8	OS–B
3	805	BS4–20	OS–A
4	–	–	–
5	–	–	–
6	601	BS5–3	LFP–C
7	573	BS2–12	WLS–A
8	573A	BS2–11	WLS–B
9	–	–	–
10	69S1	BS6–18	OPS1–3
11	69R1	BS6–6	OPS1–1
12	69V1	BS4–9	OPS1–2

PIN	WIRE	FROM	TO
13	604	BC8–1	BTP
14	14	RB2–1	OS–D
15	523	BS6–20	OTS–2
16	523A	BS6–8	OTS–1
17	605	BC8–2	BTP
18	808	BS1–9	AFS–1
19	68R1	BS6–7	WTS1–1
20	68V1	BS6–19	WTS1–2
21	–	–	–
22	–	–	–
23	25A	RB2–7	ICM2
24	–	–	–

PIN	WIRE	FROM	TO
25	765	GC1–21	GA1–3
26	766	GC1–22	GA1–6
27	767	GC1–23	GA1–2

PIN	WIRE	FROM	TO
28	–	–	–
29	219	TB3–10Y	SPLICE 7
30	13	FB–3X	BATTERY

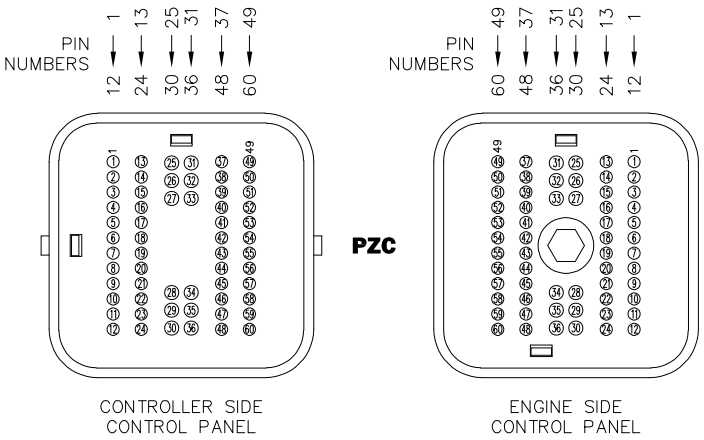

PIN	WIRE	FROM	TO
31	0	SPLICE 2	GND
32	770	GC5–2	GA1–4
33	771	GC5–1	GA1–1

PIN	WIRE	FROM	TO
34	–	–	–
35	–	–	–
36	–	–	–

PIN	WIRE	FROM	TO
37	79	BS1–17	MPU1–3
38	0	BS1–16	MPU1–2
39	SHLD	BS1–18	MPU1–1
40	797S	BS4–4	FPS–B
41	797R	BS4–16	FPS–A
42	797V	BS4–11	FPS–C
43	–	–	–
44	–	–	–
45	–	–	–
46	–	–	–
47	–	–	–
48	–	–	–

PIN	WIRE	FROM	TO
49	49	DB	ALT
50	–	–	–
51	–	–	–
52	–	–	–
53	–	–	–
54	–	–	–
55	–	–	–
56	–	–	–
57	–	–	–
58	–	–	–
59	–	–	–
60	242A	RB2–10	N/A

COMPONENTS LOCATED IN CONTROL PANEL

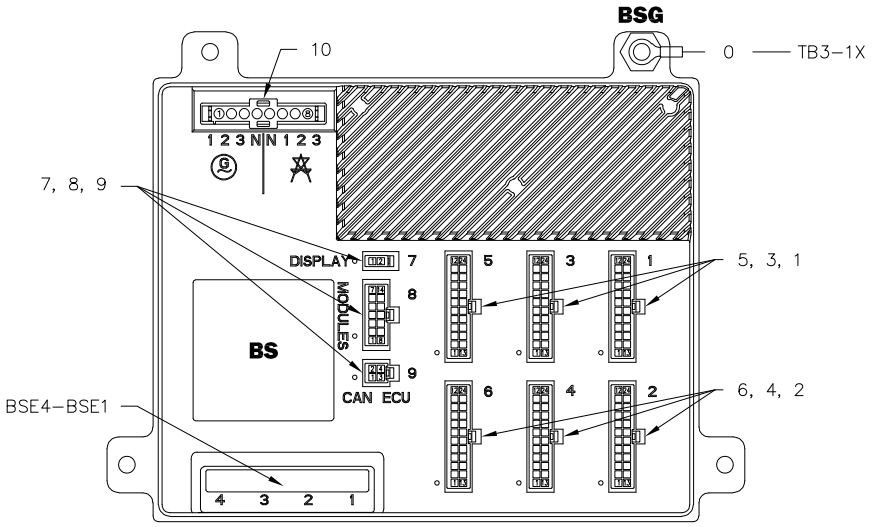

BS5

FROM	WIRE	PIN
–	–	12
TB2-4X	816	11
–	–	10
TB9-7X	DI5	9
–	–	8
–	–	7
BCC-8	505	6
TB1-8X	183	5
TB9-3X	R15	4
PZC-6	601	3
SW1-3	175	2
SW1-1	174	1

PIN	WIRE	FROM
24	DI8	TB9-11X
23	DI7	TB9-10X
22	DI6	TB9-8X
21	DI2	TB2-6X
20	DI1	TB2-5X
19	DI4	TB2-9X
18	DI3	TB2-8X
17	–	–
16	418	CBC-2
15	–	–
14	–	–
13	371	CBC-12

BS3

FROM	WIRE	PIN
–	–	12
–	–	11
TB2-3X	815	10
TB2-2X	814	9
RB2A-3	263	8
TB2-1X	813	7
RB2A-6	242	6
RB2A-5	25	5
–	–	4
RB1A-2	445	3
TB3-6Y	256	2
RB1A-6	56A	1

PIN	WIRE	FROM
24	–	–
23	–	–
22	–	–
21	–	–
20	OC23	RB3A-6
19	OC22	RB3A-5
18	OC21	RB3A-3
17	OC20	RB3A-2
16	366	RB4-2
15	–	–
14	23	RB4A-6
13	–	–

BS1

FROM	WIRE	PIN
–	–	12
TB7-1X	220F	11
TB7-1X	220F	10
PZC-18	808	9
–	–	8
–	–	7
–	–	6
–	–	5
TB1-12X	SHLD	4
TB1-11X	0	3
TB1-9X	390	2
TB1-10X	391	1

PIN	WIRE	FROM
24	–	–
23	–	–
22	0	BC1-2
21	–	–
20	–	–
19	–	–
18	SHLD	PZC-39
17	79	PZC-37
16	0	PZC-38
15	–	–
14	–	–
13	–	–

BS6

FROM	WIRE	PIN
–	–	12
–	–	11
–	–	10
–	–	9
PZC-16	523A	8
PZC-19	68R1	7
PZC-11	69R1	6
TB2-12X	AI1R	5
–	–	4
–	–	3
–	–	2
–	–	1

PIN	WIRE	FROM
24	–	–
23	–	–
22	–	–
21	–	–
20	523	PZC-15
19	68V1	PZC-20
18	69S1	PZC-10
17	AI1S	TB2-11X
16	–	–
15	–	–
14	–	–
13	–	–

BS4

FROM	WIRE	PIN
–	–	12
PZC-42	797V	11
–	–	10
PZC-12	69V1	9
PZC-2	804	8
–	–	7
–	–	6
–	–	5
PZC-40	797S	4
–	–	3
–	–	2
BCC-6	803V	1

PIN	WIRE	FROM
24	–	–
23	–	–
22	–	–
21	–	–
20	805	PZC-3
19	–	–
18	–	–
17	–	–
16	797R	PZC-41
15	–	–
14	–	–
13	–	–

BS2

FROM	WIRE	PIN
PZC-7	573	12
PZC-8	573A	11
–	–	10
–	–	9
–	–	8
–	–	7
CTC-7	399C	6
CTC-3	398C	5
CTC-6	399B	4
CTC-2	398B	3
CTC-5	399A	2
CTC-1	398A	1

PIN	WIRE	FROM
24	–	–
23	–	–
22	–	–
21	–	–
20	399N	CTC-8
19	398N	CTC-4
18	–	–
17	–	–
16	–	–
15	–	–
14	–	–
13	–	–

BS7

FROM	WIRE	PIN
DIS1-1	15A	1

PIN	WIRE	FROM
2	0D	DIS1-2

BS8

FROM	WIRE	PIN
–	–	7
–	–	6
–	–	5
AC1-10	0F	4
–	–	3
TB3-5X	R15B	2
BC2-3	SHLD	1

PIN	WIRE	FROM
14	–	–
13	–	–
12	–	–
11	15F	AC1-11
10	15E	GC1-24
9	744G	BC2-4
8	743G	BC2-5

BS10

1 2 3 N N 1 2 3

	PIN	WIRE	FROM
GEN 1	1	S1A	VSC-1
GEN 2	2	S2A	VSC-2
GEN 3	3	S3A	VSC-3
GEN N	4	00	VSC-4
UTIL N	5	T00	VSC-8
UTIL 1	6	T1A	VSC-5
UTIL 2	7	T2A	VSC-6
UTIL 3	8	T3A	VSC-7

BS9

FROM	WIRE	PIN
–	–	2
–	–	1

PIN	WIRE	FROM
4	–	–
3	–	–

BSE1-BSE4

PORT	WIRE	TO	FUNCTION
BSE1	E1	DIS	DISPLAY TO BASE COM
BSE2	E2	GEN BUS	MPS GENERATOR TO GENERATOR COM
BSE3	E3	GEN BUS	MPS GENERATOR TO GENERATOR COM
BSE4	E4	AUX DEVICE	AUX OPTION COM

COMPONENTS LOCATED IN CONTROL PANEL
BATTERY CHARGER

OPTIONAL 20 AMP BATTERY CHARGER

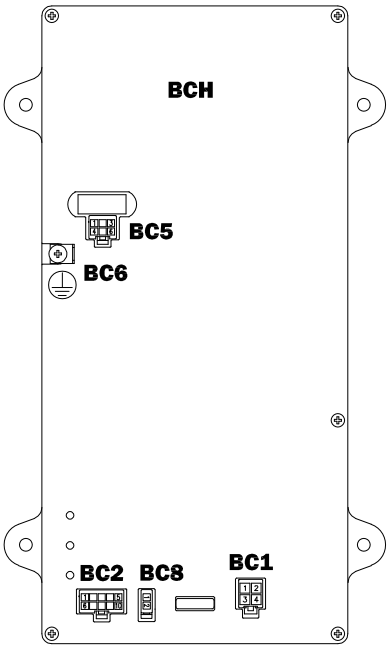

BCH

BC1

PIN	WIRE	FROM
1	218	FB5–X
2	0	BS1–22

PIN	WIRE	FROM
3	218	TB3–14Y
4	0	TB3–2Y

BC2

PIN	WIRE	FROM
1	–	–
2	–	–
3	SHLD	BS8–1
4	744G	BS8–9
5	743G	BS8–8

PIN	WIRE	FROM
6	–	–
7	–	–
8	SHLD	AC1–4
9	744G	AC1–5
10	743G	AC1–6

BC5

PIN	WIRE	FROM
1	GND	BPC–1
2	N	BPC–2
3	L1	BPC–3

PIN	WIRE	FROM
4	–	–
5	–	–
6	–	–

BC8

PIN	WIRE	FROM
1	604	PZC–13

PIN	WIRE	FROM
2	605	PZC–17

BC6

PIN	WIRE	FROM
–	0	TB3–2X

BATTERY CHARGER

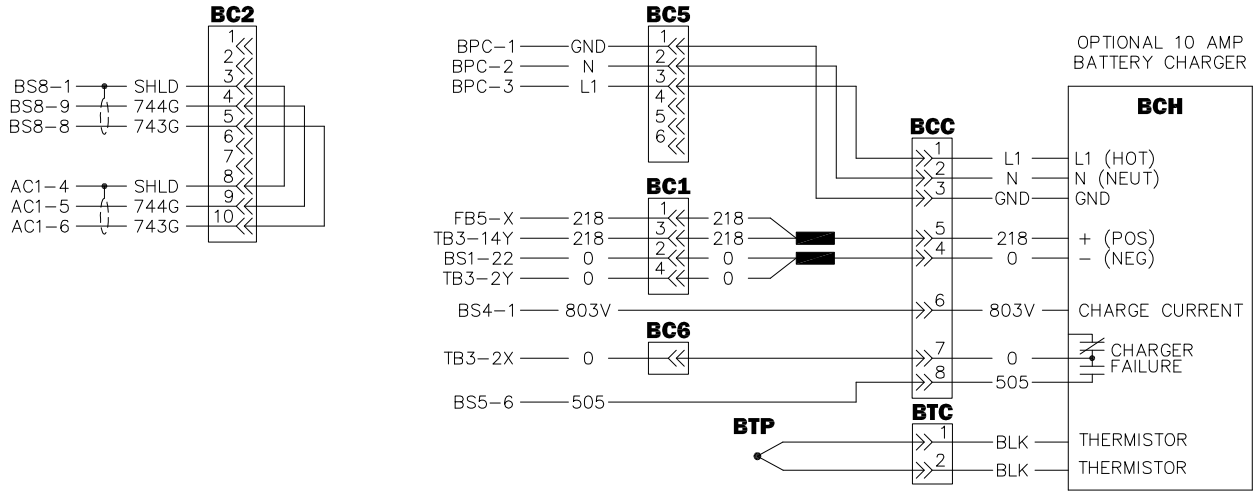

BTP NOTE:
NEWER BATTERY CHARGER MODELS ARE EQUIPPED WITH A BATTERY TEMPERATURE COMPENSATION PROBE. BTP THERMISTOR END TO BE LOCATED 1.5" to 3" FROM BATTERY POSITIVE TERMINAL POST.

PAGE 13 OF 14

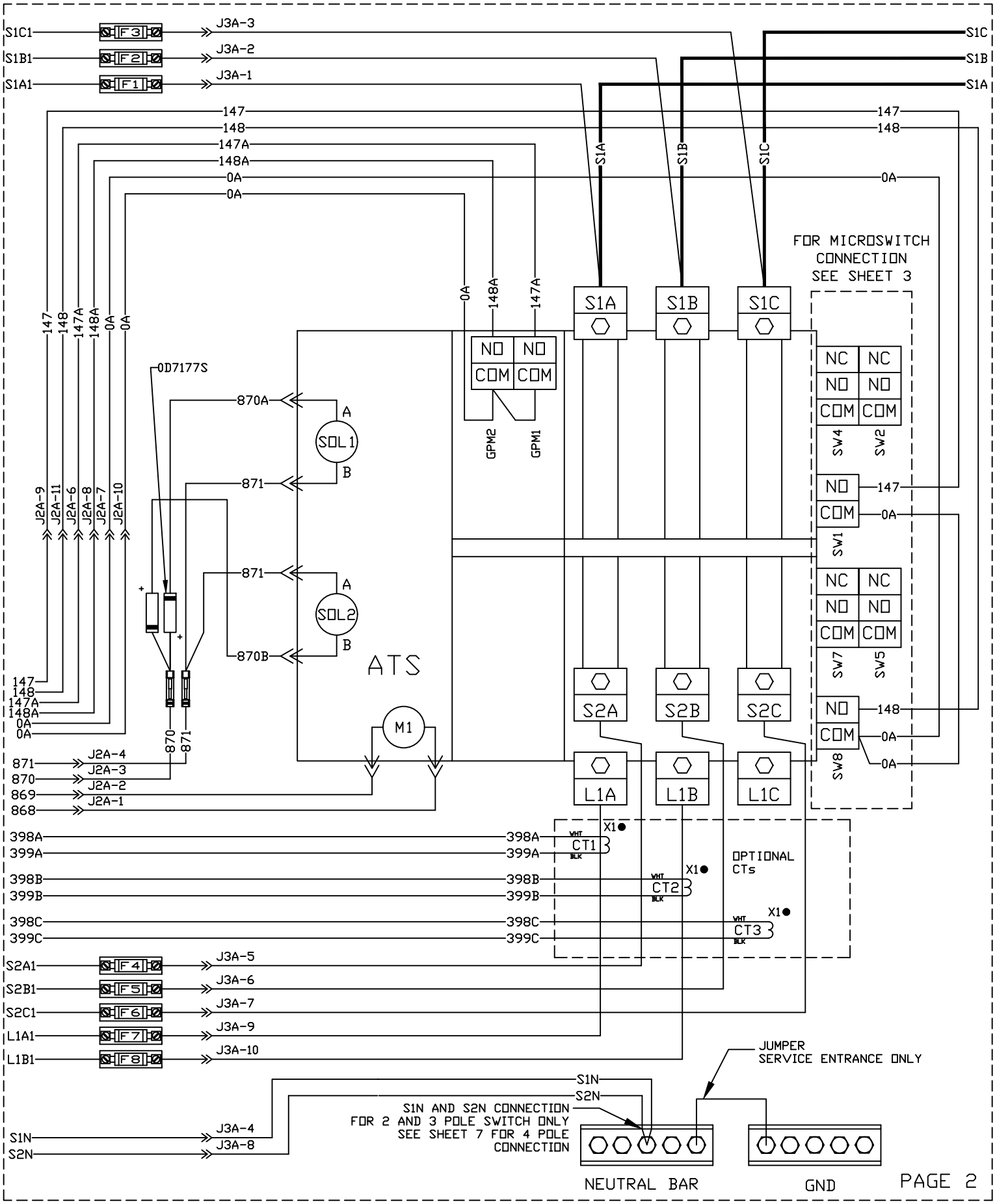

WIRING - DIAGRAM

800-1600A TRANSFER SW

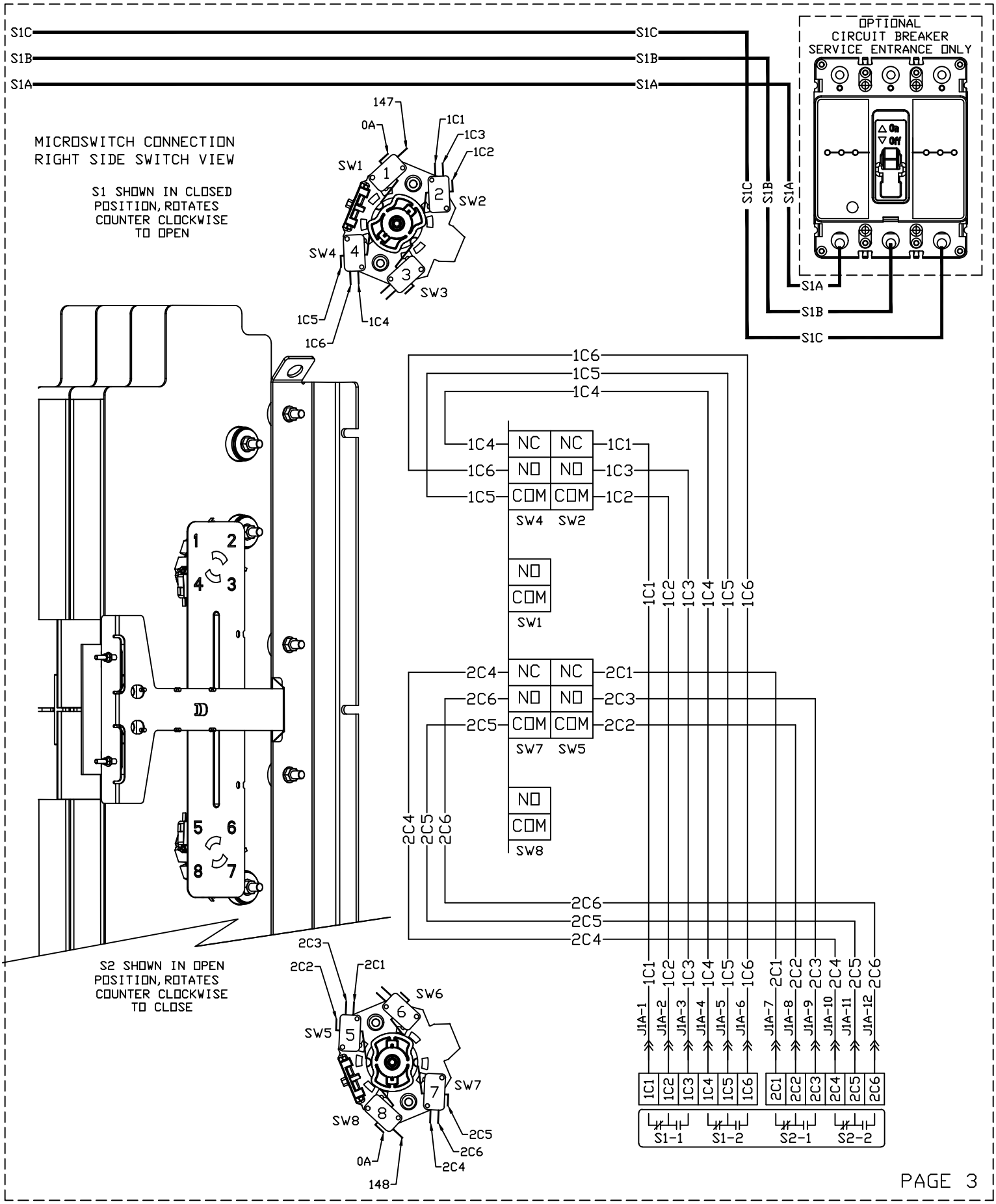

WIRING - DIAGRAM

800-1600A TRANSFER SW

DRAWING #: A0001679448

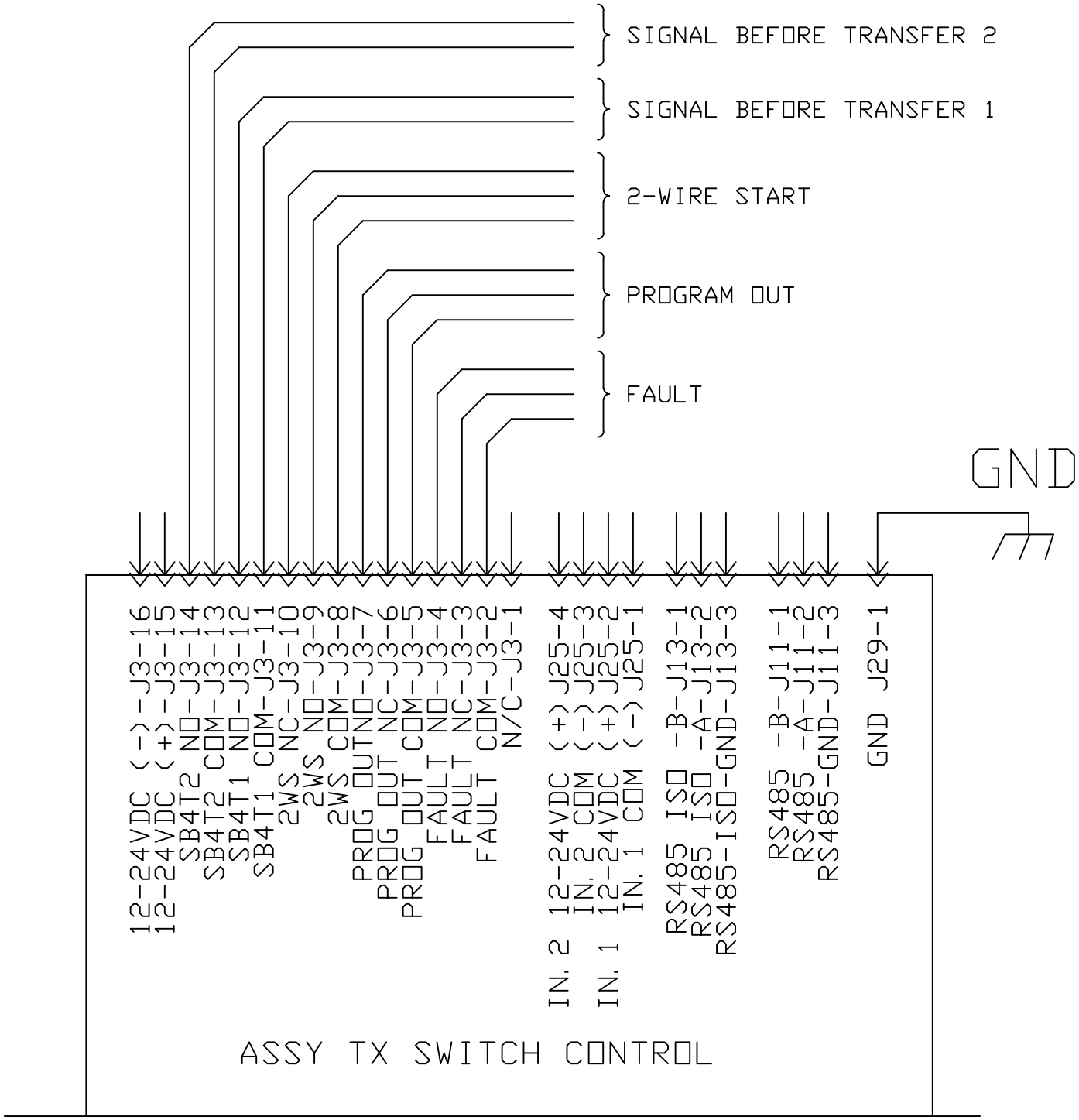
SIGNAL BEFORE TRANSFER 2
SIGNAL BEFORE TRANSFER 1
2-WIRE START
PROGRAM OUT
FAULT
GND
12-24VDC (-) - J3-16
12-24VDC (+) - J3-15
SB4T2 NO - J3-14
SB4T2 COM - J3-13
SB4T1 NO - J3-12
SB4T1 COM - J3-11
2WS NC - J3-10
2WS NO - J3-9
2WS COM - J3-8
PROG OUT NO - J3-7
PROG OUT NC - J3-6
PROG OUT COM - J3-5
FAULT NO - J3-4
FAULT NC - J3-3
FAULT COM - J3-2
N/C - J3-1
IN. 2 12-24VDC (+) J25-4
IN. 2 COM (-) J25-3
IN. 1 12-24VDC (+) J25-2
IN. 1 COM (-) J25-1
RS485 ISO -B- J13-1
RS485 ISO -A- J13-2
RS485-ISO-GND- J13-3
RS485 -B- J11-1
RS485 -A- J11-2
RS485-GND- J11-3
GND J29-1
ASSY TX SWITCH CONTROL
PAGE 4

480V GRD-Y CONTROL

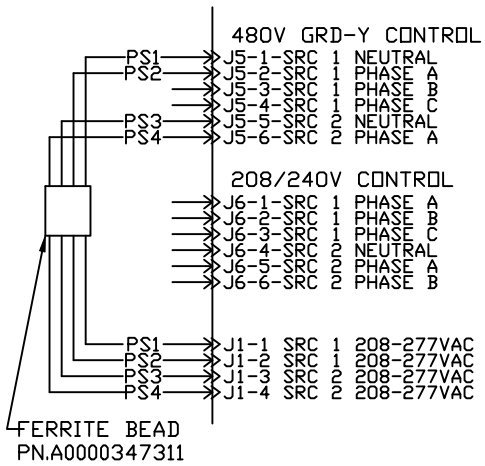

208/240V CONTROL

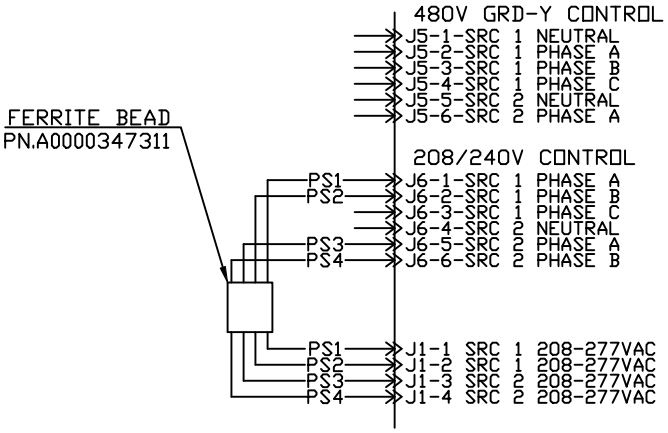

480V 3 WIRE CONNECTION WITH TRANSFORMERS

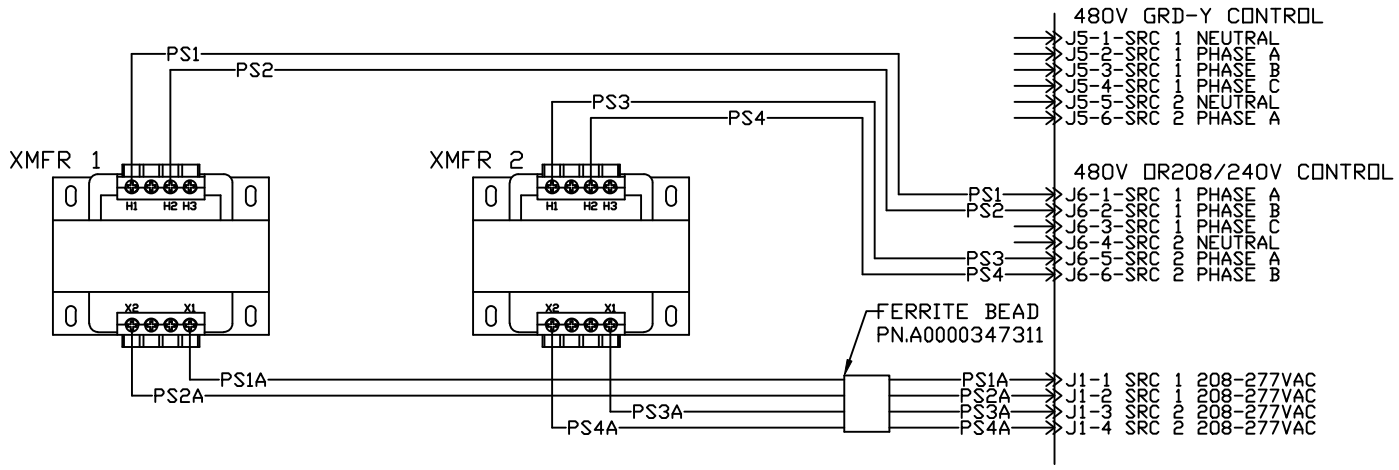

480V HEATER CONTROL

OPTIONAL HEATER
INCLUDED ON ALL 3R ENCLOSURES

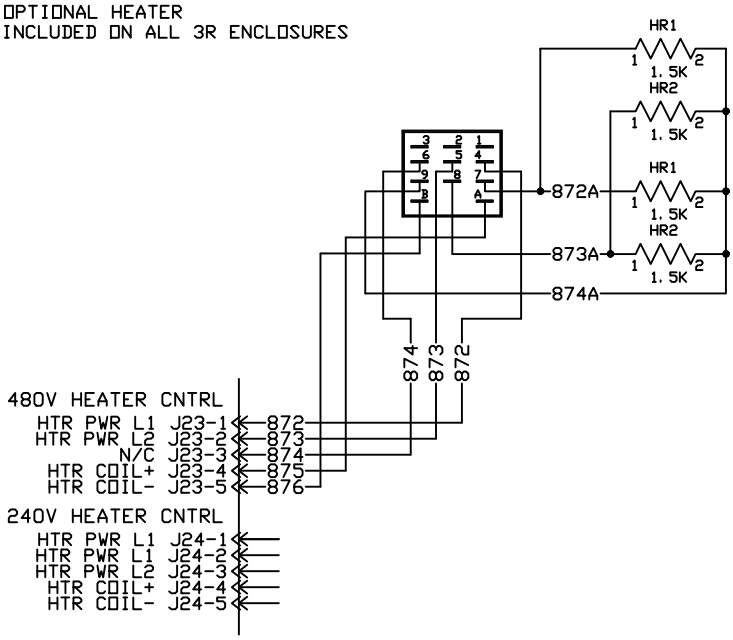

208/240V HEATER CONTROL

OPTIONAL HEATER
INCLUDED ON ALL 3R ENCLOSURES

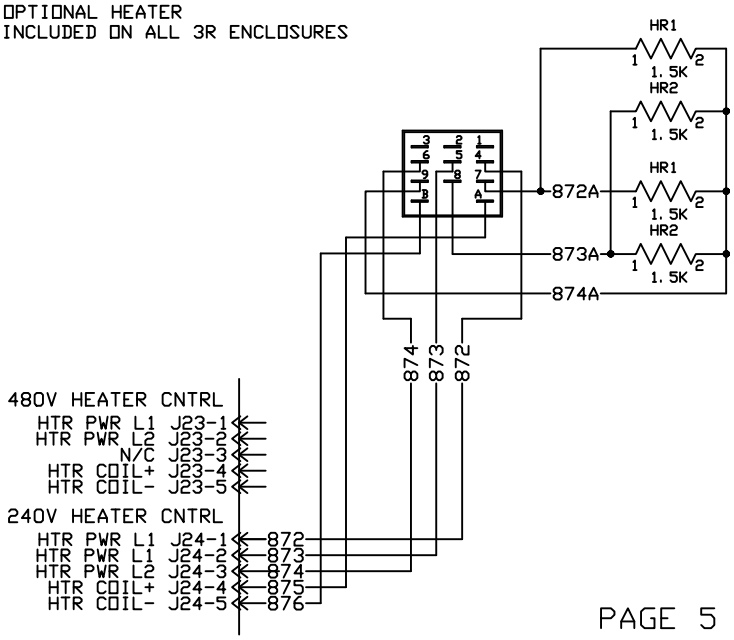

PAGE 5

600V CONNECTION WITH TRANSFORMERS

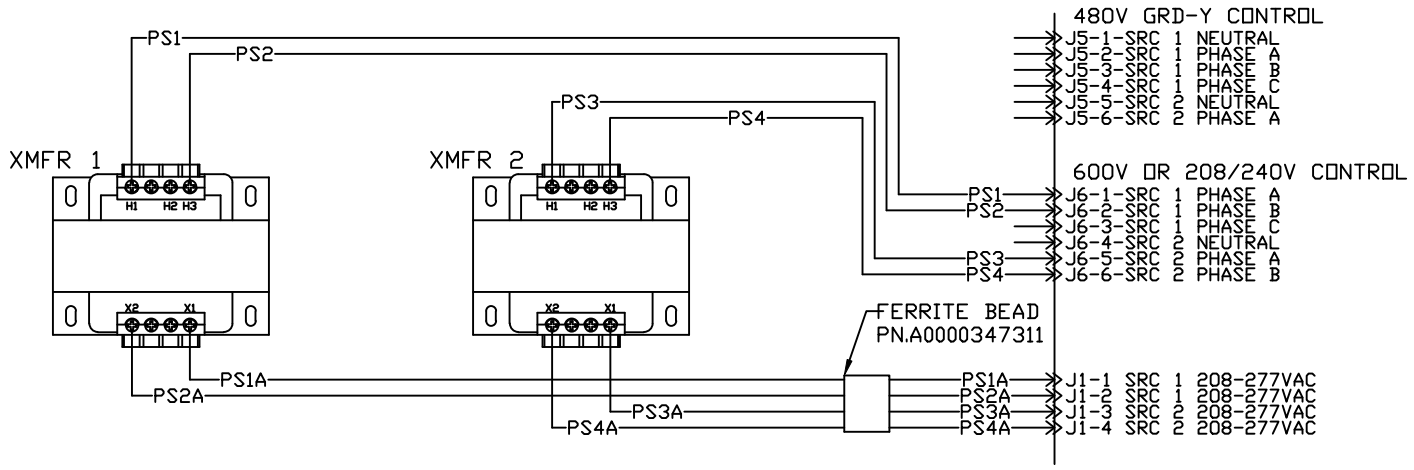

600V HEATER CONTROL

OPTIONAL HEATER
INCLUDED ON ALL 3R ENCLOSURES

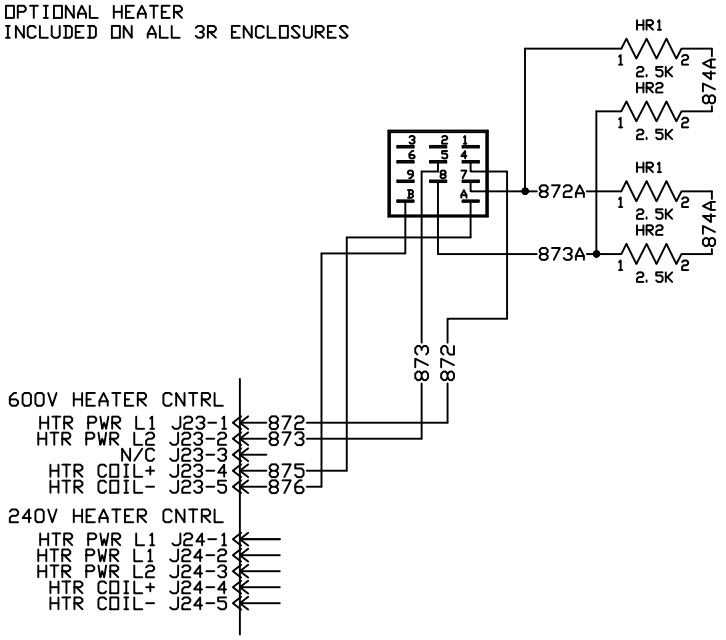

PAGE 6

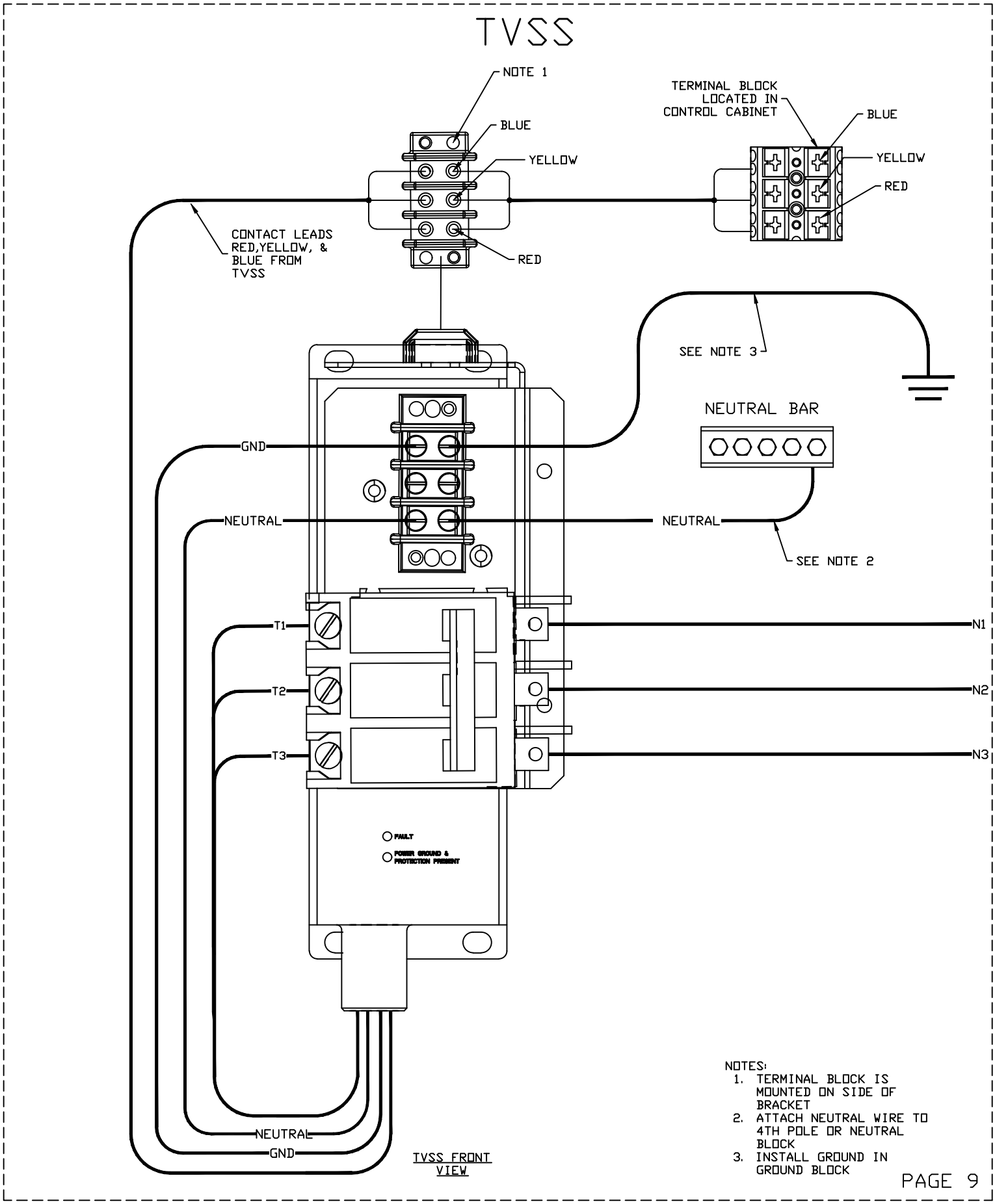
TVSS
NOTE 1
BLUE
YELLOW
RED
TERMINAL BLOCK LOCATED IN CONTROL CABINET
BLUE
YELLOW
RED
CONTACT LEADS RED,YELLOW, & BLUE FROM TVSS
SEE NOTE 3
NEUTRAL BAR
GND
NEUTRAL
NEUTRAL
SEE NOTE 2
T1
T2
T3
N1
N2
N3
FAULT
POWER GROUND & PROTECTION PRESENT
NEUTRAL
GND
TVSS FRONT VIEW
NOTES:
1. TERMINAL BLOCK IS MOUNTED ON SIDE OF BRACKET
2. ATTACH NEUTRAL WIRE TO 4TH POLE OR NEUTRAL BLOCK
3. INSTALL GROUND IN GROUND BLOCK
PAGE 9

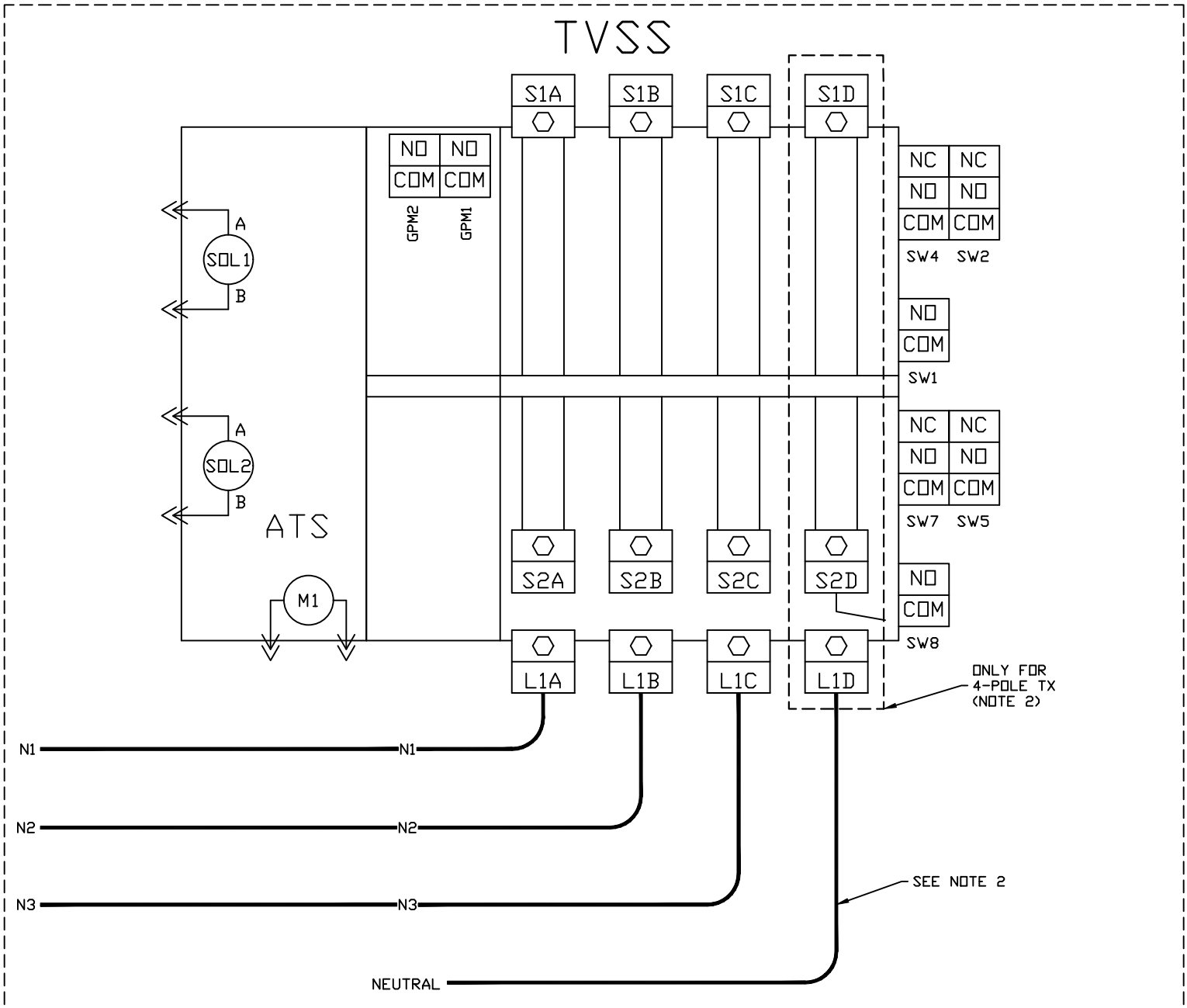

NOTES:
1. TERMINAL BLOCK IS MOUNTED ON SIDE OF BRACKET
2. ATTACH NEUTRAL WIRE TO 4TH POLE OR NEUTRAL BLOCK
3. INSTALL GROUND IN GROUND BLOCK

PAGE 10

CIRCUIT BREAKER
SERVICE ENTRANCE 1000A AND ABOVE
NEUTRAL SENSOR WIRING

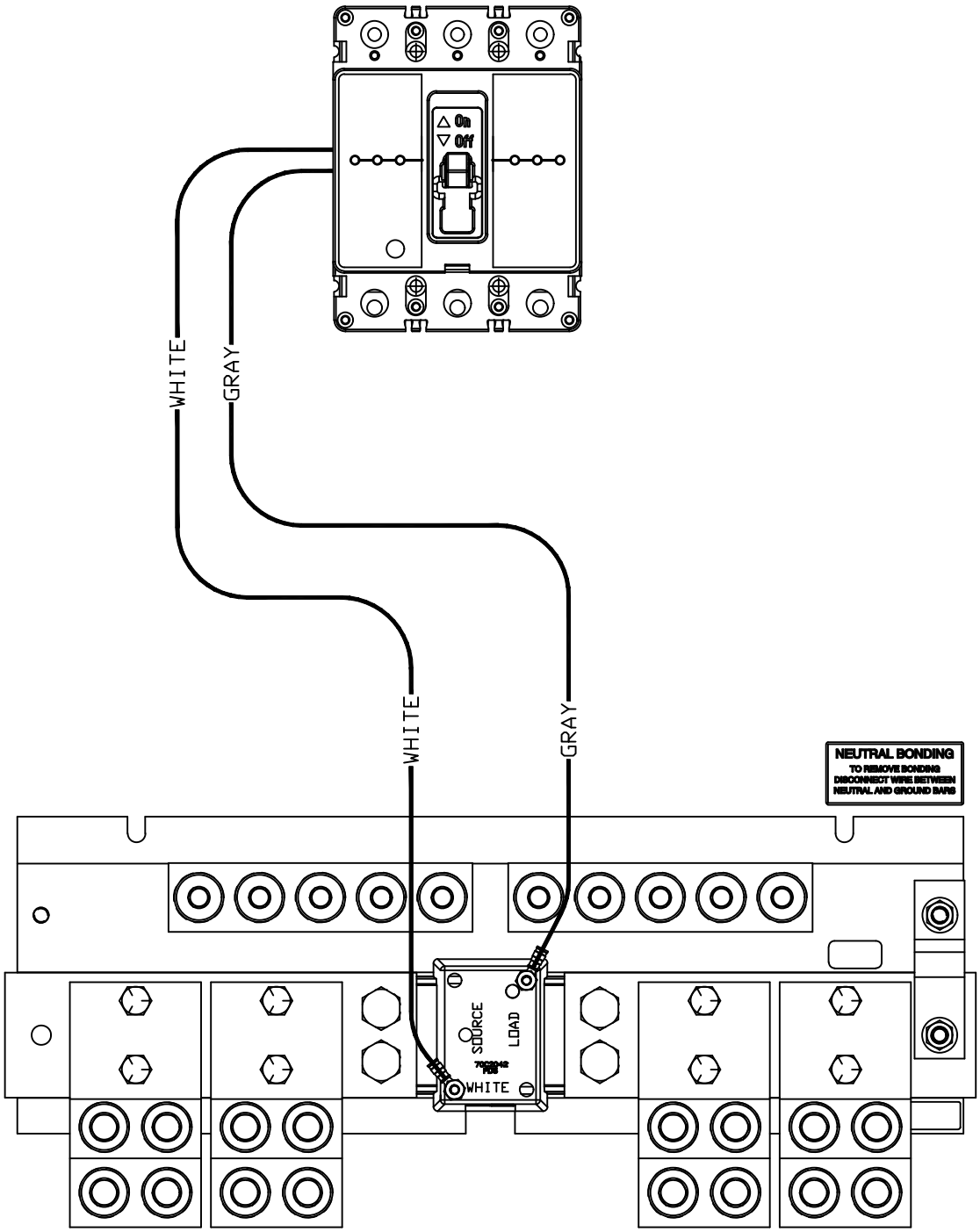

PAGE 11

CTTS CONNECTION

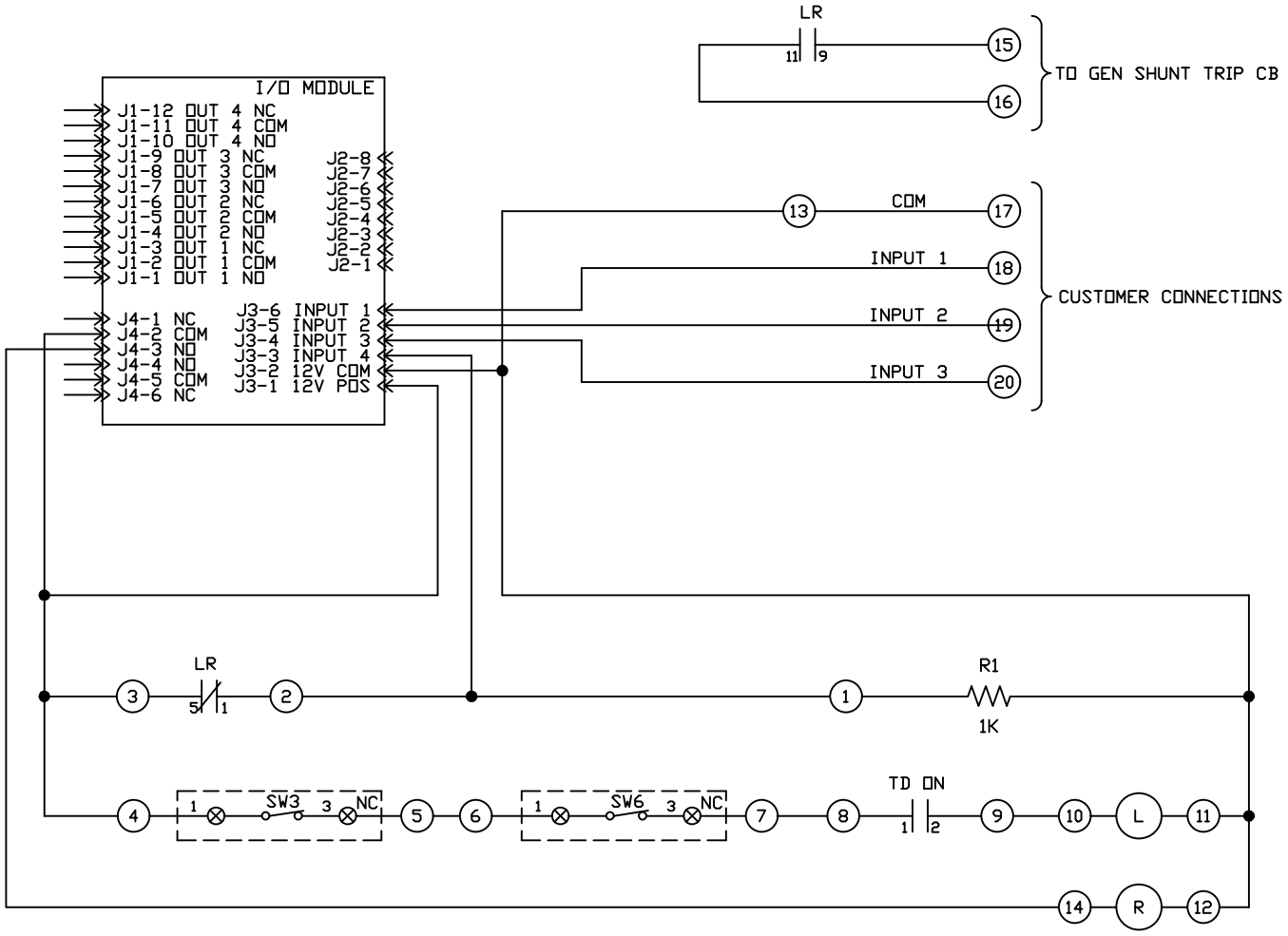

PAGE 6

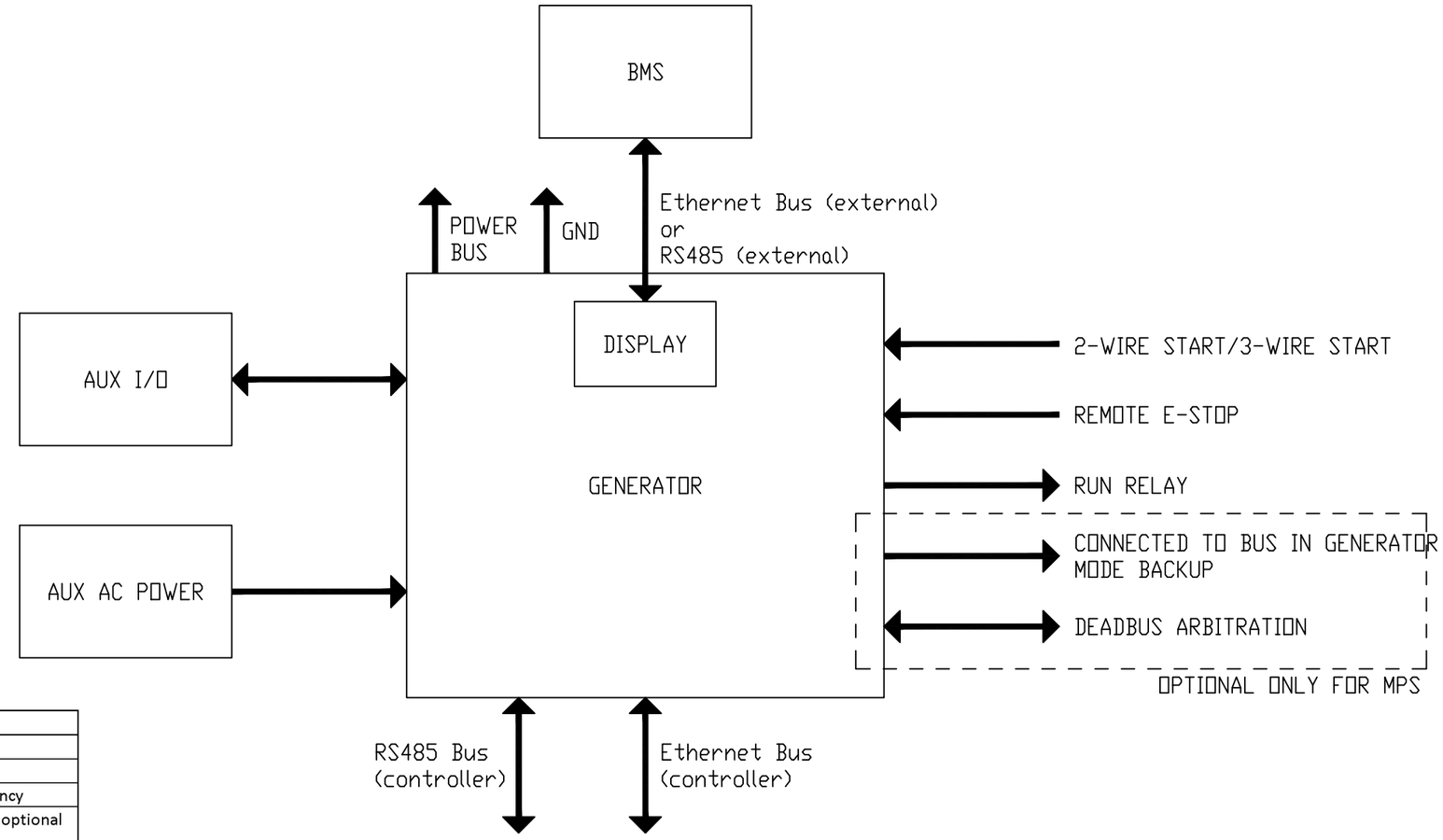

Reference	
MPS	Modular Power System. Parallel generator system.
BMS	Building Management System using Modbus TCP/IP.
Remote E-Stop	Remote Emergency Stop to shutdown the generator incase of emergency
Run Relay	This is an optional wiring used by the customer to activate/deactivate optional features based on generator running status.
2-Wire Start	Transfer switches sense loss of normal power and initiate a system start through this function.
Connected to bus in Backup	Output from generator to P&L to indicate that the generator is connected to power bus.
Deadbus Arbitration	This function ensures that only one generator is closing into the dead bus when operating with failed communications.
Aux I/O	Each generator has 4 configurable relay outputs, 4 configurable inputs and 2 configurable analog inputs for customer special use.
Aux AC Power	Generator utilizes load center to power the block heater, battery charger etc. (refer to generator Specs for wiring details).
Ethernet Bus	Not indicated in the above picture, but the Ethernet Bus is used to connect a wide range of devices to the generator, like RAP/RRP, P&L and other generators. There are two networks - controller and external
Display	It can be accessed through PC/Tablet/Smartphone using Wifi/Bluetooth.

INSTALLATION DRAWING

GENERAC POWER SYSTEMS OWNS THE COPYRIGHT OF THIS DRAWING WHICH IS SUPPLIED IN CONFIDENCE AND MUST NOT BE USED FOR ANY PURPOSE OTHER THAN FOR WHICH IT IS SUPPLIED WITHOUT THE EXPRESS WRITTEN CONSENT OF GENERAC POWER SYSTEMS.
© GENERAC POWER SYSTEMS 2013

ELECTRONICALLY APPROVED
INSIDE WINDCHILL

GENERAC

TITLE
INTERCONNECT DRAWING
POWER ZONE PRO SYNC

ISSUE DATE: 05/22/18

SIZE	CAGE NO	DWG NO	REV
B	N/A	10000034013	D
SCALE N/A	WT-KG N/A	SHEET 1 of 12	

INTERCONNECT DRAWING SINGLE GENERATOR

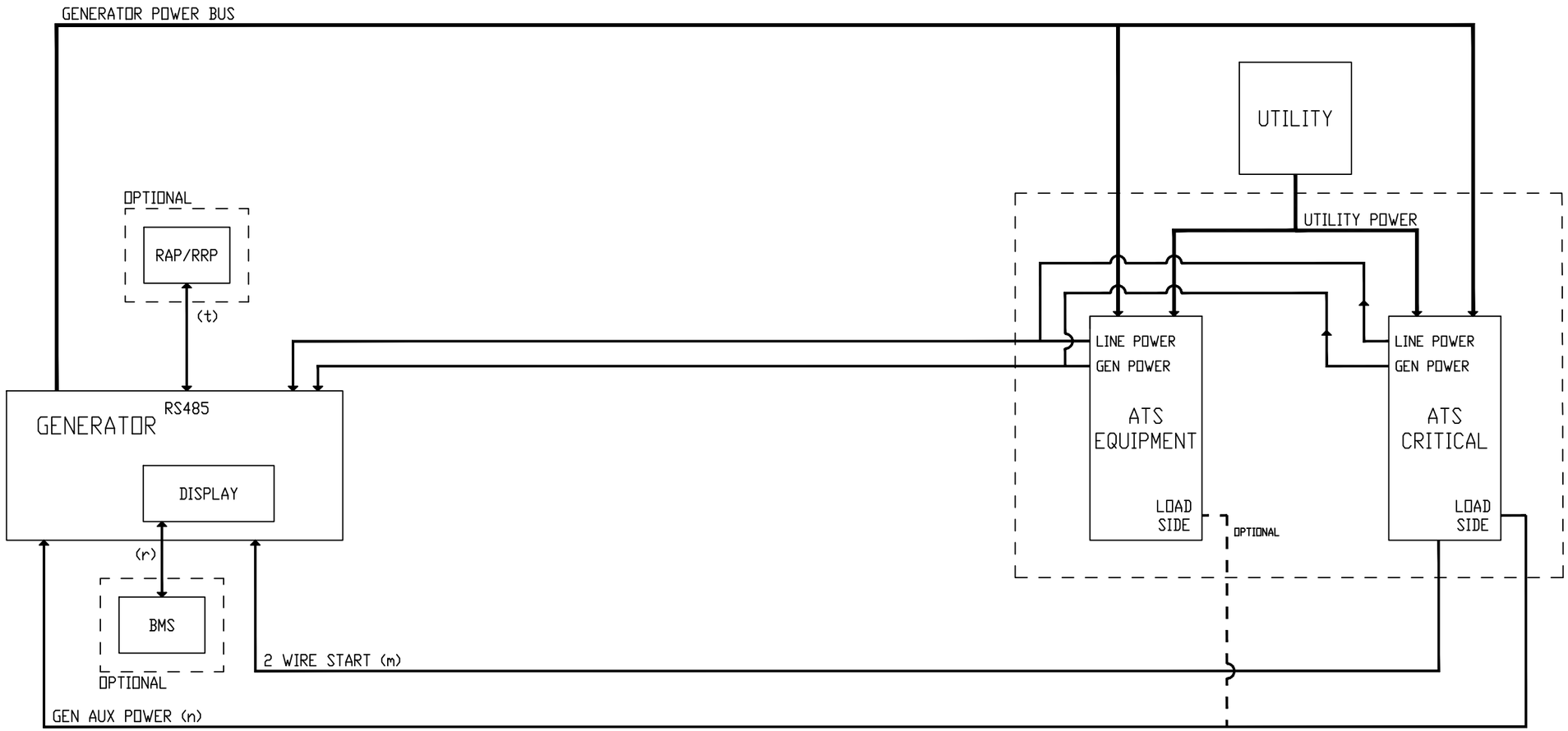

NOTES:
- DISPLAY IS CONNECTED TO ETHERNET PORT 1 OF MAIN CONTROLLER

INSTALLATION DRAWING

GENERAC POWER SYSTEMS OWNS THE COPYRIGHT OF THIS DRAWING WHICH IS SUPPLIED IN CONFIDENCE AND MUST NOT BE USED FOR ANY PURPOSE OTHER THAN FOR WHICH IT IS SUPPLIED WITHOUT THE EXPRESS WRITTEN CONSENT OF GENERAC POWER SYSTEMS.
© GENERAC POWER SYSTEMS 2013

ELECTRONICALLY APPROVED
INSIDE WINDCHILL

GENERAC

TITLE
INTERCONNECT DRAWING
POWER ZONE PRO SYNC

ISSUE DATE: 05/22/18

SIZE	CAGE NO	DWG NO	REV
B	N/A	10000034013	D

SCALE N/A | WT-KG N/A | SHEET 3 of 12

Reference	
Single RAP/RRP	When a RAP/RRP (Remote Annunciator Panel/Remote Relay Panel) is configured as singleRAP/RRP, it receives data from only the configured generator and annunciates alarms and warnings of that generator.
System RAP/RRP	If configured as System RAP/RRP, receives data from every generator and announces alarms and warnings occuring on any of the generators.
P&L	Permissive and Loadshed panel controls the Permissives and Loadsheds of ATS .
Gen	Generator
Ethernet Switch	Used to forward data packets from one ethernet port to the other ethernet port.
ATS Critical	Automatic Transfer Switch used to connect Critical Loads
ATS Equipment	Automatic Transfer Switch used to connect regular non critical Loads
BSEx	Base Station Ethernet Port x
ESWx	Ethernet Switch Port x
ETx	P&L Ethernet Port x

Reference	Function	Cable	From	To	Class
a	Communication from generator to all peripherals in controller network	Shielded CAT 5E	BSE2 on Gen1	ESW1 on Ethernet Switch	2
b	Remote Annunciator communication in controller network	Shielded CAT 5E	Eth(J12) on RAP/RRP Gen 1	ESW2 on Ethernet Switch	2
c	Remote Annunciator communication in controller network	Shielded CAT 5E	Eth(J12) on RAP/RRP Gen 2	ESW3 on Ethernet Switch	2
d	Remote Annunciator communication in controller network	Shielded CAT 5E	Eth(J12) on RAP/RRP Gen 3	ESW4 on Ethernet Switch	2
e	Close loop connecting P&L in controller network	Shielded CAT 5E	ESW6 on Ethernet Switch	Eth 3 on P&L	2
f	P&L connection to Generator 3 or the last generator in the controller network.	Shielded CAT 5E	Eth 2 on P&L	BSE3 on Gen 3	2
g	Communication between generators in controller network	Shielded CAT 5E	BSE2 on Gen 3	BSE3 on Gen 2	2
h	Communication between generators in controller network	Shielded CAT 5E	BSE2 on Gen 2	BSE3 on Gen 1	2
i	Up to 6 Permissive relay outputs to ATS	18 AWG,300V AC	P&L Panel	ATS Equipment	2
j	Up to 6 Loadshed relay outputs to ATS	18 AWG,300V AC	P&L Panel	ATS Equipment	2
k	Remote Annunciator communication in controller network	Shielded CAT 5E	Eth(J12) on System RAP/RRP	ESW5 on Ethernet Switch	2
l	Excercise with load transfer	18 AWG,300V AC	P&L Panel	ATS Equipment	2
m	2 Wire Start	18 AWG,300V AC	ATS Critical/ATS Equipment	All Generators and P&L	2
n	Generator Auxiliary Power	Custom cable based on generator auxiliary	ATS Critical/ATS Equipment loadside	All Generators	POWER
o	Generator power bus connections to ATS Critical & ATS Equipment	Custom cable proportional to ATS specifications	Generator power bus connecting all	ATS Critical and ATS	POWER
p	Utility power bus connections for ATS	Custom cable proportional to ATS specifications	Utility power bus	ATS Critical and ATS	POWER
q	Deadbus Arbitration -2 signals. Can be setup for any 2 Gens (optional for MPS only)	18 AWG,300V AC	Gen 1	Gen 2	2
r	Bus communication in external network (optional)	Shielded CAT 5E	Any generator	BMS	2
s	Local generator Remote Annunciator communication in controller network	Shielded CAT 5E	Any generator	Local gen RAP / RRP	2
t	RS485 connection configurable as single gen RAP/System RAP up to a max of 16 RAPs	Twisted cable	Any generator	RAP	--
1d	ATS Contractor Position (Utility and Gen) Signal	18 AWG,300V AC	ATS Critical / ATS Equipment	All generators	2
1a	Gen status connected to bus in Generator backup mode (optional)	18 AWG,300V AC	Gen 1	P & L	2
1b	Gen status connected to bus in Generator backup mode (optional)	18 AWG,300V AC	Gen 2	P & L	2
1c	Gen status connected to bus in Generator backup mode (optional)	18 AWG,300V AC	Gen 3	P & L	2

INSTALLATION DRAWING

GENERAC POWER SYSTEMS OWNS THE COPYRIGHT OF THIS DRAWING WHICH IS SUPPLIED IN CONFIDENCE AND MUST NOT BE USED FOR ANY PURPOSE OTHER THAN FOR WHICH IT IS SUPPLIED WITHOUT THE EXPRESS WRITTEN CONSENT OF GENERAC POWER SYSTEMS.
© GENERAC POWER SYSTEMS 2013

ELECTRONICALLY APPROVED
INSIDE WINDCHILL

GENERAC

TITLE
INTERCONNECT DRAWING
POWER ZONE PRO SYNC

ISSUE DATE: 05/22/18

SIZE	CAGE NO	DWG NO	REV
B	N/A	10000034013	D

SCALE N/A | WT-KG N/A | SHEET 12 of 12

Certification of Quality

Generac Power Systems certifies that the products we manufacture have been built and tested in accordance with strict internal and external standards for quality. Our quality management system has been registered with the internationally recognized ISO 9001:2008 standard and our products comply with external standards that include, but are not limited to, CSA, NEMA, EGSA, ISO, and UL.

The Generac Quality Management System (GQMS) ensures the highest standards of quality at every level of production, from raw materials to the finished product. This includes receiving inspection, in-process checks, product and process audits, testing, final inspections, and shipping standards.

Tests of our products are performed in accordance with our internal procedures and controlled through the GQMS to ensure accuracy and effectiveness. The testing process and product designs comply with external standards which may include, but are not limited to: ISO 8528-5, ISO 3046, NFPA 99, NFPA 110, BS 5514, SAE J1349, and DIN 6271.

Generac Power Systems has over one million square feet of manufacturing space and over 2000 employees dedicated to designing and manufacturing power generation equipment in our multiple State of Wisconsin, USA factories. All of our installed and mobile generators are built with pride by our skilled American workforce to ensure our customers receive the quality that they expect from Generac.

We are committed to producing quality products for both our internal and external customers. We will continuously improve our processes and diligently measure all aspects of our business.

Daniel Waschow

Vice President of Quality
Generac Power Systems, Inc.
Waukesha, Wisconsin USA

 © 2015 Generac Power Systems, Inc. All rights reserved. All specifications are subject to change without notice.

Generac Power Systems 2 Year (2C) Extended Limited Warranty for Industrial Standby Generators

For the period of warranty noted below, which begins upon the successful start-up and/or on-line activation of the unit, Generac Power Systems, Inc. “Generac” warrants that its Generator will be free from defects in material and workmanship for the items and period set forth below. Generac will, at its discretion, repair or replace any part(s) which, upon evaluation, inspection and testing by Generac or an Independent Authorized Service Dealer, is found to be defective. Any equipment that the purchaser/owner claims to be defective must be evaluated by the nearest Independent Authorized Service Dealer. Emissions components are excluded from coverage under this extended warranty. Emissions warranty coverage is detailed in a separate emissions warranty.

Warranty Coverage: Warranty coverage period is for Two (2) years or two-thousand (2,000) hours, whichever occurs first.

Warranty Coverage in Year(s) 1-2
Parts, Labor and Limited Travel

Limited Gearbox Coverage:

Year(s): 1-5 Coverage	Year(s): 6-10 Coverage
Limited Parts and Labor	Limited Parts Only

Guidelines:

1. Unit must be registered and proof of purchase available.
2. Any and all warranty repairs and/or concerns must be performed and/or addressed by an Independent Authorized Service Dealer, or branch thereof. Repairs or diagnostics performed by individuals other than an Independent Authorized Service Dealer not authorized in writing by Generac will not be covered.
3. This Warranty is transferable between ownership of original install site.
4. Generac supplied engine coolant heaters (block-heaters), heater controls and circulating pumps are only covered during the first year of the warranty provision.
5. Generac may choose to repair, replace or refund a piece of equipment in its sole discretion.
6. Enclosures are warranted against rust for the first year of ownership only. Damage caused after receipt of generator is the responsibility of the owner and is not covered by this warranty. Nicks, scrapes, dents or scratches to the painted enclosure should be repaired promptly by the owner.
7. Warranty only applies to permanently wired and mounted units.
8. Damage to any covered components or consequential damages caused by the use of a non-OEM part will not be covered by the warranty.
9. Proof of performance of all required maintenance must be available.
10. Travel allowance is limited to 300 miles maximum and seven and one half (7.5) hours maximum (per occurrence, whichever is less) round trip from the nearest Independent Authorized Service Dealer. Any additional travel required will not be covered.
11. Engines, driven components and fuel tanks used in Generac’s standby power products system can carry a separate manufacturer’s (OEM) warranty (the “OEM Warranties”), unless otherwise expressly stated. OEM Warranties are in addition to this Warranty. All warranty claims for defects in material and/or workmanship on Generac product OEM components, may be directed through the OEM distributor/dealer network. OEM Warranties may vary and are subject to change. Generac shall have no liability under OEM warranties.

The following will NOT be covered by this warranty:

1. Costs of normal maintenance (i.e. tune-ups, associated part(s), adjustments, loose/leaking clamps, installation and start-up).
2. Damage/failures to the generator caused by accidents, shipping, handling, or improper storage.
3. Damage/failures caused by operation with improper fuels, speeds, loads or installations other than what’s recommended or specified by Generac Power Systems.
4. Damage to the generator due to the use of non-Generac parts and/or equipment, contaminated fuels, oils, coolants/antifreeze or lack of proper fuels, oil or coolants/antifreeze.
5. Failures due to normal wear and tear, accident, misuse, abuse, neglect, improper installation, improper sizing, or rodent, reptile, and/or insect infestation.
6. Rental equipment used while warranty repairs are being performed and/or any extraordinary equipment used for removal and/or reinstallation of generator (i.e. cranes, hoists, lifts, et. al.).
7. Planes, ferries, railroad, buses, helicopters, snowmobiles, snow-cats, off-road vehicles or any other mode of transport deemed not standard by Generac.
8. Products that are modified or altered in a manner not authorized by Generac in writing.
9. Starting batteries, fuses, light bulbs, engine fluids and any related labor.
10. Steel enclosures that rust as a result of improper installation, location in a harsh or salt water environment, or are scratched where the integrity of applied paint is compromised.
11. Units sold, rated or used for "Prime Power", "Trailer Mounted" or "Rental Unit" applications as defined by Generac. Contact an Independent Authorized Service Dealer for definitions.
12. Shipping costs associated with expedited shipping.
13. Additional costs for overtime, holiday or emergency labor costs for repairs outside of normal business hours.
14. Any incidental, consequential or indirect damages caused by defects in materials or workmanship, or any delay in repair or replacement of the defective part(s).
15. Failures caused by any act of God or external cause including without limitation, fire, theft, freezing, war, lightning, earthquake, windstorm, hail, water, tornado, hurricane, or any other matters which are reasonably beyond the manufacturer’s control.

THIS WARRANTY SUPERSEDES ALL OTHER WARRANTIES, EXPRESSED OR IMPLIED. SPECIFICALLY, GENERAC MAKES NO OTHER WARRANTIES AS TO THE MERCHANTABILITY OR FITNESS FOR A PARTICULAR PURPOSE. ANY IMPLIED WARRANTIES WHICH ARE ALLOWED BY LAW, SHALL BE LIMITED IN DURATION TO THE TERMS OF THE EXPRESS WARRANTY PROVIDED HEREIN. SOME JURISDICTIONS DO NOT ALLOW LIMITATIONS ON HOW LONG AN IMPLIED WARRANTY LASTS, SO THE ABOVE LIMITATION MAY NOT APPLY TO YOU. GENERAC'S ONLY LIABILITY SHALL BE THE REPAIR OR REPLACEMENT OF PART(S) AS STATED ABOVE. IN NO EVENT SHALL GENERAC BE LIABLE FOR ANY INCIDENTAL OR CONSEQUENTIAL DAMAGES, EVEN IF SUCH DAMAGES ARE A DIRECT RESULT OF GENERAC’S NEGLIGENCE. SOME JURISDICTIONS DO NOT ALLOW THE EXCLUSION OR LIMITATION OF INCIDENTAL OR CONSEQUENTIAL DAMAGES, SO THE ABOVE LIMITATION MAY NOT APPLY TO YOU. THIS WARRANTY GIVES YOU SPECIFIC LEGAL RIGHTS. YOU ALSO HAVE OTHER RIGHTS UNDER APPLICABLE LAW.

FOR AUSTRALIA ONLY: Our goods come with guarantees that cannot be excluded under the Australian Consumer Law. You are entitled to a replacement or refund for a major failure and for compensation for any other reasonably foreseeable loss or damage. You are also entitled to have the goods repaired or replaced if the goods fail to be of acceptable quality and the failure does not amount to a major failure.
FOR NEW ZEALAND ONLY: Nothing in this warranty statement excludes, restricts or modifies any condition, warranty right or remedy which pursuant to the New Zealand Legislation (Commonwealth or State) including the Fair Trading Practices Act of 1986 or the Consumer Guarantees Act 1993 (“CGA”) applies to this limited warranty and may not be so excluded, restricted or modified. Nothing in this statement is intended to have the effect of contracting out of the provisions of the CGA, except to the extent permitted by that Act, and these terms are to be modified to the extent necessary to give effect to that intention. If you acquire goods from Generac Power Systems or any of its authorized resellers and distributors for the purposes of a business, then pursuant to section 43(2) of the CGA, it is agreed that the provisions of the CGA do not apply.

GENERAC POWER SYSTEMS, INC. • P.O. BOX 8 • Waukesha, WI, USA 53187
Ph: (888) GENERAC (436-3722) • Fax: (262) 544-4851

To locate the nearest Independent Authorized Service Dealer and to download schematics, exploded views and parts lists
visit our website: www.generac.com

Part No. 0J4299 Revision J (2/16)

Generac Power Systems 2 Year (2C) Extended Limited Warranty for Industrial Transfer Switch Systems

For the period of warranty noted below, which begins upon the successful start-up and/or on-line activation/registration of the unit, Generac Power Systems, Inc. "Generac" warrants that its transfer switch will be free from defects in material and workmanship for the items and period set forth below. Generac will, at its discretion, repair or replace any part(s) which, upon evaluation, inspection and testing by Generac or an Independent Authorized Service Dealer, is found to be defective. Any equipment that the purchaser/owner claims to be defective must be evaluated by the nearest Independent Authorized Service Dealer.

Warranty Coverage in Year(s) 1-2
Parts, Labor and Limited Travel

Guidelines:

1. Unit must be registered and proof of purchase available.
2. Any and all warranty repairs and/or concerns must be performed and/or addressed by an Independent Authorized Service Dealer, or branch thereof. Repairs or diagnostics performed by individuals other than Independent Authorized Service Dealers not authorized in writing by Generac will not be covered.
3. Warranty is transferable between ownership of original installation site.
4. Generac may choose to repair, replace or refund a piece of equipment in its sole discretion.
5. Warranty only applies to permanently wired and mounted units.
6. Enclosures are warranted for the first year of ownership only. Damage caused after receipt of generator is the responsibility of the owner and is not covered by this warranty. Nicks, scrapes, dents or scratches to the painted enclosure should be repaired promptly by the owner.
7. Proof of performance of all required maintenance must be available.
8. Travel allowance is limited to 300 miles maximum or seven and one half (7.5) hours maximum (per occurrence, whichever is less) round trip from the nearest Independent Authorized Service Dealer. Any additional travel required will not be covered.

The following will NOT be covered by this warranty:

1. Costs of normal maintenance (i.e. associated part(s), adjustments, installation or start-up).
2. Damage to the transfer switch system caused by accidents, shipping, handling or improper storage.
3. Damage/failures caused by operation with loads or installations other than what's recommended or specified by Generac. Unauthorized modification/misapplication will not be warranted unless authorized by Generac in writing.
4. Rental equipment used while warranty repairs are being performed and/or any extraordinary equipment used for removal and/or reinstallation of transfer switch (i.e. cranes, hoists, lifts, et. al.).
5. Planes, ferries, railroad, buses, helicopters, snowmobiles, snow-cats, off-road vehicles or any other mode of transport deemed not standard by Generac.
6. Failures due to normal wear and tear, accident, misuse, abuse, neglect, improper installation, or improper sizing.
7. Damage to any covered components or consequential damages caused by the use of a non-OEM part will not be covered by this warranty.
8. Damage related to rodent, reptile, and/or insect infestation.
9. Repairs or diagnostics performed by individuals other than Independent Authorized Service Dealers not authorized in writing by Generac.
10. Steel enclosures that rust as a result of improper installation, location in a harsh or salt water environment, or are scratched where the integrity of applied paint is compromised.
11. Fuses, light bulbs and any related labor.
12. Units sold, rated or used for "Prime Power," "Trailer Mounted" or "Rental Unit" applications as defined by Generac. Contact an Independent Authorized Service Dealer for definitions.
13. Failures caused by any act of God or external cause including without limitation, fire, theft, freezing, war, lightning, earthquake, windstorm, hail, water, tornado, hurricane, or any other matters which are reasonably beyond the manufacturer's control.
14. Shipping costs associated with expedited shipping.
15. Any incidental, consequential or indirect damages caused by defects in materials or workmanship, or any delay in repair or replacement of the defective part(s).
16. Any unit built/manufactured prior to 2014 models.
17. Overtime, holiday or emergency labor.
18. Living or travel expenses of person(s) performing service, except as specifically included within the terms of a specific unit warranty period.

THIS WARRANTY SUPERSEDES ALL OTHER WARRANTIES, EXPRESSED OR IMPLIED. SPECIFICALLY, GENERAC MAKES NO OTHER WARRANTIES AS TO MERCHANTABILITY OR FITNESS FOR A PARTICULAR PURPOSE. ANY IMPLIED WARRANTIES WHICH ARE ALLOWED BY LAW, SHALL BE LIMITED IN DURATION TO THE TERMS OF THE EXPRESS LIMITED WARRANTY PROVIDED HEREIN. SOME JURISDICTIONS DO NOT ALLOW LIMITATIONS ON HOW LONG AN IMPLIED WARRANTY LASTS, SO THE ABOVE LIMITATION MAY NOT APPLY TO YOU. GENERAC'S ONLY LIABILITY SHALL BE THE REPAIR OR REPLACEMENT OF PART(S) AS STATED ABOVE. IN NO EVENT SHALL GENERAC BE LIABLE FOR ANY INCIDENTAL OR CONSEQUENTIAL DAMAGES, EVEN IF SUCH DAMAGES ARE A DIRECT RESULT OF GENERAC'S NEGLIGENCE. SOME JURISDICTIONS DO NOT ALLOW THE EXCLUSION OR LIMITATION OF INCIDENTAL OR CONSEQUENTIAL DAMAGES, SO THE ABOVE LIMITATION MAY NOT APPLY TO YOU. THIS WARRANTY GIVES YOU SPECIFIC LEGAL RIGHTS. YOU COULD ALSO HAVE OTHER RIGHTS UNDER APPLICABLE LAW.

FOR AUSTRALIA ONLY: Our goods come with guarantees that cannot be excluded under the Australian Consumer Law. You are entitled to a replacement or refund for a major failure and for compensation for any other reasonably foreseeable loss or damage. You are also entitled to have the goods repaired or replaced if the goods fail to be of acceptable quality and the failure does not amount to a major failure.
FOR NEW ZEALAND ONLY: Nothing in this warranty statement excludes, restricts or modifies any condition, warranty right or remedy which pursuant to the New Zealand Legislation (Commonwealth or State) including the Fair Trading Practices Act of 1986 or the Consumer Guarantees Act 1993 ("CGA") applies to this limited warranty and may not be so excluded, restricted or modified. Nothing in this statement is intended to have the effect of contracting out of the provisions of the CGA, except to the extent permitted by that Act, and these terms are to be modified to the extent necessary to give effect to that intention. If you acquire goods from Generac Power Systems or any of its authorized resellers and distributors for the purposes of a business, then pursuant to section 43(2) of the CGA, it is agreed that the provisions of the CGA do not apply.

GENERAC POWER SYSTEMS, INC. • P.O. BOX 8 • Waukesha, WI, USA 53187
Ph: (888) GENERAC (436-3722) • Fax: (262) 544-4851

To locate the nearest Independent Authorized Service Dealer and to download schematics, exploded views and parts lists
visit our website: www.generac.com

Part No. 0J4303 Revision E (4/21)

CERTIFICATE

This is to certify that

Generac Power Systems, Inc.

S45 W29290 Hwy. 59
Waukesha, WI 53189
United States of America

with the organizational units/sites as listed in the annex

has implemented and maintains a **Quality Management System**.

Scope:
Design, Manufacture, and Distribution of Power Products and Solutions.

Through an audit, documented in a report, it was verified that the management system fulfills the requirements of the following standard:

ISO 9001 : 2015

Certificate registration no.	10012920 QM15
Date of original certification	2021-06-25
Date of certification	2024-06-06
Valid until	2027-07-15

DQS Inc.

David Tellez
Managing Director

DQS IS A MEMBER OF

Accredited Body: DQS Inc., 1500 McConnor Parkway, Suite 400, Schaumburg, IL 60173 USA
The validity of the certification can only be verified by the QR-code.

Annex to certificate
Registration No. 10012920 QM15

Generac Power Systems, Inc.

S45 W29290 Hwy. 59
Waukesha, WI 53189
United States of America

Location	Scope
10012920 **Generac Power Systems, Inc.** **S45 W29290 Hwy. 59** **Waukesha, WI 53189** **United States of America**	Design and Support of Power Products and Solutions.
10012922 **Generac Power Systems, Inc.** **211 Murphy Dr.** **Eagle, WI 53119** **United States of America**	Manufacture and Distribution of Power Products and Solutions.
10012923 **Generac Power Systems, Inc.** **757 N. Newcomb St.** **Whitewater, WI 53190** **United States of America**	Manufacture and Distribution of Power Products and Solutions.
10012924 **Generac Power Systems, Inc.** **900 N. Parkway** **Jefferson, WI 53549** **United States of America**	Manufacture of Power Products and Solutions.
10013528 **Generac Power Systems** **3815 Oregon St.** **Oshkosh, WI 54902** **United States of America**	Manufacture and Distribution of Power Products.
10014175 **Generac Power Systems, Inc.** **351 Collins Road** **Jefferson, WI 53549** **United States of America**	Parts and Components Receiving, Warehousing, Return and Reconditioning of Product, and Distribution to Generac Locations.
10017103 **Generac Mobile** **215 Power Drive** **Berlin, WI 54923** **United States of America**	Manufacture and Distribution of Power Products.

This annex (edition: 2024-06-06) is only valid in connection with the above-mentioned certificate.

Annex to certificate
Registration No. 10012920 QM15

Generac Power Systems, Inc.

S45 W29290 Hwy. 59
Waukesha, WI 53189
United States of America

Remote Location	Scope
10017439 **Generac Mobile** **745 E. Knopf St.** **Berlin, WI 54923** **United States of America**	The remote location at Belin, WI performs the following primary functions: Parts and Components Receiving, Warehousing, and Shipping.

This annex (edition: 2024-06-06) is only valid in connection with the above-mentioned certificate.

UNITED STATES ENVIRONMENTAL PROTECTION AGENCY
2024 MODEL YEAR
CERTIFICATE OF CONFORMITY
WITH THE CLEAN AIR ACT

OFFICE OF TRANSPORTATION AND AIR QUALITY
ANN ARBOR, MICHIGAN 48105

Certificate Issued To: Generac Power Systems, Inc.
(U.S. Manufacturer or Importer)

Certificate Number: RGNXB14.22N1-012

Effective Date: 08/30/2023

Expiration Date: 12/31/2024

Byron J. Bunker, Division Director
Compliance Division

Issue Date: 08/30/2023

Revision Date: N/A

Manufacturer: Generac Power Systems, Inc.
Engine Family: RGNXB14.22N1
Mobile/Stationary Certification Type: Stationary
Fuel : Natural Gas (CNG/LNG)
Emission Standards :
Part 60 Subpart JJJJ Table 1
VOC (g/Hp-hr) : 0.7
CO (g/Hp-hr) : 2.0
NOx (g/Hp-hr) : 1.0
Emergency Use Only : N

Pursuant to Section 213 of the Clean Air Act (42 U.S.C. section 7547) and 40 CFR Part 60, 1065, 1068, and 60 (stationary only and combined stationary and mobile) and subject to the terms and conditions prescribed in those provisions, this certificate of conformity is hereby issued with respect to the test engines which have been found to conform to applicable requirements and which represent the following nonroad engines, by engine family, more fully described in the documentation required by 40 CFR Part 60 and produced in the stated model year.

This certificate of conformity covers only those new nonroad spark-ignition engines which conform in all material respects to the design specifications that applied to those engines described in the documentation required by 40 CFR Part 60 and which are produced during the model year stated on this certificate of the said manufacturer, as defined in 40 CFR Part 60. This certificate of conformity does not cover nonroad engines imported prior to the effective date of the certificate.

It is a term of this certificate that the manufacturer shall consent to all inspections described in 40 CFR 1068.20 and authorized in a warrant or court order. Failure to comply with the requirements of such a warrant or court order may lead to revocation or suspension of this certificate for reasons specified in 40 CFR Part 60. It is also a term of this certificate that this certificate may be revoked or suspended or rendered void *ab initio* for other reasons specified in 40 CFR Part 60.

This certificate does not cover large nonroad engines sold, offered for sale, or introduced, or delivered for introduction, into commerce in the U.S. prior to the effective date of the certificate.

Emissions Warranty Statement
(Spark-Ignition Engine Powered Generators)

Warranty Rights, Obligations, and Coverage

The Spark-Ignition Engine ("Engine") installed in your Generac Power Systems Inc. ("Generac") "Generator" is certified to Clean Air Act ("CAA") requirements including United States Environmental Protection Agency ("EPA") implementing regulations. Through this "Emissions Warranty," Generac warrants that your certified stationary Engine is designed and manufactured free from defects in material and workmanship which would cause a noncompliance to EPA regulations or damage due to premature failure of emission related engine components ("ERCs").

The Emission Control Information Label on your Engine presents the "EPA Family Name." The **fifth** character of the EPA Family Name indicates which EPA "Product Category" the Engine is certified to, and which regulations apply.

Fifth character of EPA Family Name:

- **B:** Generator Engine is certified to the "Large Nonroad Spark-Ignition Engine" or "NRLSI" regulations
- **L** : Generator Engine is certified to the "Nonroad Compression-Ignition Engine" or "NRCI" regulations
- **NOTE:** All NRCI Engines installed in Generac Generators are certified by the third-party Engine supplier. Please see separately provided third-party Engine Manufacturer manuals and warranty.
- **S**: Generator Engine is certified to the "Small Nonroad Spark-Ignition Engine" or "NRSSI" regulations

Warranty Duration

Generac considers the Generator Engine as placed into service upon sale to the first purchaser (the customer who will install and/or operate the Generator), thereby activating the warranty period from the time of sale to the first purchaser or for total engine hours for the periods below. For NRSSI Engines, the Emissions Control Information label on your Engine presents the Compliance Period, establishing the Emissions Warranty period in the table below. *Hour limitation for Engines equipped with hour meters.

Engine Category	Duration from Sale	
	Years	Hours*
NRLSI - Emissions Related Components	3	2500
NRLSI - High Cost Emissions Related Components ($770 or greater replacement cost in isolation)	5	3500
NRSSI Exhaust Emissions Related Components [Compliance Period = 500 hours]	2	250
NRSSI Exhaust Emissions Related Components [Compliance Period = 1000 hours]	2	500

EMISSION RELATED PARTS MAY INCLUDE THE FOLLOWING (IF EQUIPPED):

1. Fuel Metering
   a. Carburetor
   b. Injection
   c. Pressure Regulators
   d. Fuel Rail
   e. Fuel Pump
   f. Mixers
   g. Regulators
   h. Liquid Gas Vaporizer
   i. Fuel Lines
2. Intake (Manifold, Piping)
3. Ignition Module
4. Ignition Coil
5. Spark Plug
6. Spark Plug Wires
7. Exhaust Manifold
8. Catalyst Assembly
9. Muffler
10. Crankcase Breather Assembly
11. Sensors
12. Electronic Controls/Diagostics

Purchasers'/Owner's Warranty Responsibilities and Limitations

The Engine purchaser/owner/operator ("You") is responsible for:

1. Engine installation, operation, adjustment, and maintenance per Generac's specifications, instructions, and Owner's Manual.
2. Presenting the Engine to an authorized Generac distribution center, servicing dealer, or equivalent entity ("Generac Service Center") as soon as a problem presents. Generac will complete Emissions Warranty repairs in a reasonable time.
   a. You are responsible for transportation and delivery expenses incurred to/from the Generac Service Center.
   b. You are responsible for damages or losses incurred in transport or shipment for inspection or Emissions Warranty repairs.

Partie No. A0006376253 Rev. B 12/2024

Generac warranty coverage and obligation:

1. Generac will repair or replace at no cost to you, including diagnosis, parts, and labor, defective or prematurely failed ERCs.
   a. Generac will pay for inspection and diagnostic services determining a warrantable condition.
      i. Customer may be responsible for inspection and diagnostic services fees if no warrantable condition is determined.

Generac will deny Emissions Warranty coverage and claims:

1. For evidence of abuse, misuse, neglect, improper maintenance, deficient maintenance, unapproved modifications, accidents, or acts of God.
2. For damage not caused by Generac Engines or Generac equipment.
3. For Engines on which add-on or non-equivalent parts are installed.

Limitation for ERCs subject to maintenance schedules:

1. ERCs not scheduled for maintenance repaired or replaced under this Emissions Warranty: the repaired/replaced component is warranted only for the remaining warranty period.
2. ERCs scheduled for maintenance having failed prior to first scheduled maintenance: the repaired/replaced ERC is warranted through the next scheduled maintenance event.

Part and Service Selection:

1. You may choose any qualified repair shop or person to maintain, replace, or repair your Engine with original or equivalent replacement components.
2. Generac recommends that you retain all receipts covering maintenance on your equipment, but Generac cannot deny Emissions Warranty service solely for lack of receipts.
3. Emissions Warranty, recall, and all other services paid for by Generac must be performed at an authorized Generac service provider.

Contacts: Emissions Warranty service can be initiated through your selling dealer or a Generac Service Center. Please call 1-800-333-1322 or visit www.generac.com or write to Generac Power Systems, Inc. P.O. Box 8, Waukesha, WI 53187.

Important Note: This Emissions Warranty does not apply to any incidental, consequential, or indirect damages caused by: defects in materials or workmanship, or any delay in repair or replacement of the defective part(s). Emissions Warranty is in place of all other warranties, expressed or implied. Specifically, Generac makes no other warranties as to the merchantability or fitness for a particular purpose. Any implied warranties required by law, shall be limited in duration to the terms of the express warranty provided herein.

Purchaser's/Owner's Recordkeeping Responsibilities (United States Environmental Protection Agency Requirements for STATIONARY EMERGENCY Generators [NRSSI and NRLSI Engines]

EPA regulations in 40 C. F. R § 60 Subpart JJJJ require the Owner/Operator to maintain the certified emergency stationary SI internal combustion engine ("Emergency Engine") and emissions control system according to Generac's Owner's Manual instructions. The Owner/Operator ("You") may need to maintain and be able to present records including:

1. The Emergency Engine is certified to meet EPA emission standards.
2. Maintenance records.
3. Records to demonstrate that the engine was operated less than 100 hours per year on propane and only during emergency situations.
4. Records of operating hours, including emergency and non-emergency operation; Generac Emergency Engines are equipped with non-resettable hour meters to facilitate recordkeeping.
5. Compliance permits and records for State and local requirements.

You are responsible for compliance and potential liabilities for all Emergency Engine operation including requirements and limitations determined by Federal, State, local, and insurance agencies. Emergency Engines may be operated for maintenance checks and readiness testing provided that the tests are recommended by Federal, State, or local requirements; Generac, or the insurance company associated with the Engine.

Your certified Emergency Engine has a pre-set emission control system and does not require adjustment.

Maintenance checks and readiness testing is generally limited to 100 hours per year. Emergency Engines may be used without a time limit during qualifying emergency situations.

Emergency Engines may, depending on local regulations, operate up to 50 hours per year in non-emergency situations, including demand response without compensation, counted towards the 100 hours per year provided for maintenance and testing, but cannot be used for peak shaving or to generate income or as part of a financial arrangement.

Failing to follow the Generac Owner's Manual may cause EPA to treat your Emergency Engine as non-certified and subject to site permitting and / or performance testing.

Non-Compliance Liability

You may be subject to penalties for violations to Federal, State and local laws including those in 40 C.F.R § 1068.101(b) for improper operation, maintenance, or compliance practices. California regulations may prohibit demand response operation for Emergency Engines not certified to California Air Resources Board regulations.

GENERAC®

Installation Guidelines

For

Stationary Industrial Generators

Standalone Gas or Diesel

SAVE THIS MANUAL FOR FUTURE REFERENCE

⚠WARNING

CANCER AND REPRODUCTIVE HARM

www.P65Warnings.ca.gov.

(000393a)

⚠WARNING

Breathing diesel engine exhaust exposes you to chemicals known to the State of California to cause cancer and birth defects or other reproductive harm.

- Always start and operate the engine in a well-ventilated area.
- If in an enclosed area, vent the exhaust to the outside.
- Do not modify or tamper with the exhaust system.
- Do not idle the engine except as necessary.

For more information go to www.P65Warnings.ca.gov/diesel. (000394)

The information in this manual is accurate based on products produced at the time of publication. The manufacturer reserves the right to make technical updates, corrections, and product revisions at any time without notice.

Table of Contents

Section 1: Introduction and Safety

Introduction 1
- Read This Manual Thoroughly 1

Safety Rules 1
- How to Obtain Service 1
- General Hazards 2

Exhaust Hazards 3

Electrical Hazards 3

Lifting Hazards 4

Fire Hazards 4

Explosion Hazards 4

Battery Hazards 5

General Rules 5
- Before You Begin 6
- Standards Index 6

Section 2: Installation Planning

Unit Drawings 7
- Installation Drawings 7

Wiring Diagrams 7

Receiving 8
- Receiving and Unpacking 8
- Inspection 8

Storage Before Installation 8
- Long Term Storage 8
- Short Term Storage 8

Lifting 8

Generator Location 9
- General Location Guidelines 9
- Weather Considerations 9

Section 3: Foundations and Mounting

Generator Foundations 11
- Concrete Pad 11
- Dimensions 11
- Unit Clearance 11
- Roof Installation and Protection 11
- Combustible Floor Protection 11
- Stub Up Area 12

Mounting 12
- Fixed Foundation 12
- Bottom Enclosure 12
- Connections 12
- Tie Down Holes 12

Section 4: Ventilation System

General 13

Outdoor Installations 13
- Clearance 13

Indoor Installations 13
- Ventilation 13
- Ventilation Practices 13
- Air Flow 13
- Louvers 14
- Motorized Louvers 14

Section 5: Exhaust System

Best Practices 15
- Emissions Compliance 16
  - Closed Units 16
  - Open Units 16

System Components 16
- Exhaust Manifold 16

Heat Shields 16
- Blankets (Soft Manifold Shields) 16
- Guards and Shields 16

Turbochargers 17
- Wastegate 17
- Flexible Exhaust Connections 17
- Flexible Metal Hose and Bellows 18
- Installing Flexible Connections 18
- Slip Joints 19

Silencer 20
- Silencer Rating 20
- Silencer Selection 20
- Silencer Installation 20

Exhaust System Piping 21
Exhaust System Design 21
Other Considerations 21
Condensate Traps 22
Exhaust Thimbles 22
Exhaust Pipe Insulation 22
Water Ingress Prevention 23
Exhaust System Backpressure 23
Measuring Backpressure 23
Backpressure Tap Installation 24
Calculating Backpressure 25
Equivalent Length of Straight Pipe 25
Combined Exhaust Systems 25
Pipe Support Considerations 26
Thermal Growth 26
Turbocharger Loading 26
Vibration Transmission 26
Exhaust Discharge 27
Exhaust Louvers 27
Common Exhaust Stack 28
Power Module or Drop-Over Enclosure 29
Cleanliness During Installation 29
Slobber or Wet Stacking 29

Section 6: Gaseous Fuel Systems

General 31
Fuel System Conversion 31
Gaseous Fuel Properties 31
Natural Gas 31
Propane Vapor (LPV) and Propane Liquid (LPL) 31
Gaseous Fuel Systems 31
Natural Gas System 31
LP-Vapor Withdrawal System 33
LPG-Liquid Withdrawal System 34
Dual Fuel NG-LP System 35
Sediment Trap 35
Fuel Pressure Regulators 36
General 36
Definitions 36
Best Practices 37
Operating Fuel Pressure 37
Engine Fuel Consumption 37
Fuel Pressure Regulator Sizing 37
Recommended Fuel Pressure Regulators ... 38
Primary Fuel Pressure Regulator 38
Pipe Sizing Considerations 38
General 38
Minimum Recommended Pipe Length 39
Pipe Sizing Practices 39
Short Runs with Few or No Bends 39
Long Runs with Multiple Bends 40
Natural Gas and LP-Vapor Pipe Sizing 40
LP-Liquid Pipe Sizing 43
Sizing LP Tanks for Vapor Withdrawal 44
Final Operating Test 46
Gas Pressure Test Port Location 46
Final Test Procedure 48

Section 7: Diesel Fuel Systems

General Information 49
Diesel Fuel Base Tank 49
Diesel Fuel Recommendations 49
Day Tanks 52
Other Options and Considerations 52

Section 8: Electrical System

General Information 53
Wiring Installation-Connection Safety 53
General Wiring Requirements 53
High Voltage Customer Connections 53
Field Wiring Connections to Buss Bars . 57
Low Voltage Customer Connections 57
Transfer Switch Location 59
Battery 59
Battery Location 60
Battery Size 60
Battery Charger 60
Battery Cables 60
Battery Installation and Replacement 61
Preliminary Instructions 61
12 VDC System 61
24 VDC System 61
Final Instructions 61

Table of Contents

Section 9: Installation Checklists

Safety Checklist 63
Installation Planning Checklist 63
Foundations and Mounting Checklist 63
Ventilation System Checklist 64
Exhaust System Checklist 64
Gaseous Fuel System Checklist 66
Diesel Fuel System Checklist 66
Electrical System Checklist 67

This page intentionally left blank.

Section 1: Introduction and Safety

Introduction

Thank you for purchasing a Generac Power Systems Inc. product. This unit has been designed to provide high-performance, efficient operation, and years of use when maintained properly.

The information in this manual is accurate based on products produced at the time of publication. The manufacturer reserves the right to make technical updates, corrections, and product revisions at any time without notice.

Read This Manual Thoroughly

⚠WARNING

Consult Manual. Read and understand manual completely before using product. Failure to completely understand manual and product could result in death or serious injury. (000100a)

If any section of this manual is not understood, contact the nearest Independent Authorized Service Dealer (IASD) or Generac Customer Service at 1-888-436-3722 (1-888-GENERAC), or visit ***www.generac.com*** for starting, operating, and servicing procedures. The owner is responsible for correct maintenance and safe use of the unit.

This manual must be used in conjunction with all other supporting product documentation supplied with the product.

SAVE THESE INSTRUCTIONS for future reference. This manual contains important instructions that must be followed during placement, operation, and maintenance of the unit and its components. Always supply this manual to any individual that will use this unit, and instruct them on how to correctly start, operate, and stop the unit in case of emergency.

Safety Rules

The manufacturer cannot anticipate every possible circumstance that might involve a hazard. The alerts in this manual, and on tags and decals affixed to the unit, are not all inclusive. If using a procedure, work method, or operating technique that the manufacturer does not specifically recommend, verify that it is safe for others and does not render the equipment unsafe.

Throughout this publication, and on tags and decals affixed to the unit, DANGER, WARNING, CAUTION, and NOTE blocks are used to alert personnel to special instructions about a particular operation that may be hazardous if performed incorrectly or carelessly. Observe them carefully. Alert definitions are as follows:

⚠DANGER

Indicates a hazardous situation which, if not avoided, will result in death or serious injury.

(000001)

⚠WARNING

Indicates a hazardous situation which, if not avoided, could result in death or serious injury.

(000002)

⚠CAUTION

Indicates a hazardous situation which, if not avoided, could result in minor or moderate injury.

(000003)

NOTE: Notes contain additional information important to a procedure and will be found within the regular text of this manual.

These safety alerts cannot eliminate the hazards that they indicate. Common sense and strict compliance with the special instructions while performing the action or service are essential to preventing accidents.

How to Obtain Service

When the unit requires servicing or repairs, contact Generac Customer Service at 1-888-GENERAC (1-888-436-3722) or visit ***www.generac.com*** for assistance.

When contacting Generac Customer Service about parts and service, always supply the complete model and serial number of the unit as given on its data decal located on the unit. Record the model and serial numbers in the spaces provided on the front cover of this manual.

General Hazards

DANGER

Loss of life. Property damage. Installation must always comply with applicable codes, standards, laws and regulations. Failure to do so will result in death or serious injury. (000190)

DANGER

Automatic start-up. Disconnect utility power and render unit inoperable before working on unit. Failure to do so will result in death or serious injury. (000191)

WARNING

Electrocution. Potentially lethal voltages are generated by this equipment. Render the equipment safe before attempting repairs or maintenance. Failure to do so could result in death or serious injury. (000187)

WARNING

Accidental Start-up. Disconnect the negative battery cable, then the positive battery cable when working on unit. Failure to do so could result in death or serious injury. (000130)

WARNING

Equipment damage. Only qualified service personnel may install, operate, and maintain this equipment. Failure to follow proper installation requirements could result in death, serious injury, and equipment or property damage. (000182a)

WARNING

Personal Injury. Fuel lines are pressurized. Servicing the fuel lines may release high pressure fuel and could result in death or serious injury. (000501)

WARNING

Electric shock. Only a trained and licensed electrician should perform wiring and connections to unit. Failure to follow proper installation requirements could result in death, serious injury, and equipment or property damage. (000155a)

WARNING

Moving Parts. Do not wear jewelry when starting or operating this product. Wearing jewelry while starting or operating this product could result in death or serious injury. (000115)

WARNING

Moving Parts. Keep clothing, hair, and appendages away from moving parts. Failure to do so could result in death or serious injury. (000111)

WARNING

Hot Surfaces. When operating machine, do not touch hot surfaces. Keep machine away from combustibles during use. Hot surfaces could result in severe burns or fire. (000108)

WARNING

Equipment and property damage. Do not alter construction of, installation, or block ventilation for generator. Failure to do so could result in unsafe operation or damage to the generator. (000146)

WARNING

Risk of injury. Do not operate or service this machine if not fully alert. Fatigue can impair the ability to service this equipment and could result in death or serious injury. (000215)

WARNING

Injury and equipment damage. Do not use generator as a step. Doing so could result in falling, damaged parts, unsafe equipment operation, and could result in death or serious injury. (000216)

- Inspect the generator regularly, and contact the nearest IASD for parts needing repair or replacement.

Exhaust Hazards

DANGER

Asphyxiation. Running engines produce carbon monoxide, a colorless, odorless, poisonous gas. Carbon monoxide, if not avoided, will result in death or serious injury. (000103)

WARNING

Equipment and property damage. Do not alter construction of, installation, or block ventilation for generator. Failure to do so could result in unsafe operation or damage to the generator. (000146)

WARNING

Asphyxiation. Always use a battery operated carbon monoxide alarm indoors and installed according to the manufacturer's instructions. Failure to do so could result in death or serious injury. (000178a)

- The generator must be installed and operated outdoors only.

Electrical Hazards

DANGER

Electrocution. Contact with bare wires, terminals, and connections while generator is running will result in death or serious injury. (000144)

DANGER

Electrocution. Never connect this unit to the electrical system of any building unless a licensed electrician has installed an approved transfer switch. Failure to do so will result in death or serious injury. (000150)

DANGER

Electrical backfeed. Use only approved switchgear to isolate generator from the normal power source. Failure to do so will result in death, serious injury, and equipment damage. (000237)

DANGER

Electrocution. Verify electrical system is properly grounded before applying power. Failure to do so will result in death or serious injury. (000152)

DANGER

Electrocution. Do not wear jewelry while working on this equipment. Doing so will result in death or serious injury. (000188)

DANGER

Electrocution. Water contact with a power source, if not avoided, will result in death or serious injury. (000104)

DANGER

Electrocution. In the event of electrical accident, immediately shut power OFF. Use non-conductive implements to free victim from live conductor. Apply first aid and get medical help. Failure to do so will result in death or serious injury. (000145)

Lifting Hazards

WARNING

Personal injury. Failure to properly connect lifting cables, chains, or straps could result in death, serious injury, or property damage.

(000346)

WARNING

Personal Injury. Do not use lifting hook if there are signs of damage or corrosion. Doing so could result in death, serious injury, or property damage.

(000349)

WARNING

Personal Injury. Do not use lifting hook other than as directed. Failure to do so could result in death, serious injury, or property damage.

(000350)

WARNING

Personal Injury. Verify all fasteners are properly tightened prior to lifting unit. Failure to do so could result in death, serious injury, or property damage.

(000351)

WARNING

Personal injury. Excessive weight. Use only appropriate lifting eyes and lifting equipment to lift unit. Improper lifting techniques could result in equipment damage, death or serious injury. (000224)

Fire Hazards

WARNING

Fire risk. Fuel and vapors are extremely flammable. Do not operate indoors. Doing so could result in death, serious injury, or property or equipment damage. (000281)

WARNING

Fire hazard. Do not obstruct cooling and ventilating airflow around the generator. Inadequate ventilation could result in fire hazard, possible equipment damage, death or serious injury.

(000217)

WARNING

Fire and explosion. Installation must comply with all local, state, and national electrical building codes. Noncompliance could result in unsafe operation, equipment damage, death, or serious injury.

(000218)

WARNING

Fire hazard. Use only fully-charged fire extinguishers rated “ABC” by the NFPA. Discharged or improperly rated fire extinguishers will not extinguish electrical fires in automatic standby generators.

(000219)

WARNING

Electrocution. Refer to local codes and standards for safety equipment required when working with a live electrical system. Failure to use required safety equipment could result in death or serious injury.

(000257)

WARNING

Risk of Fire. Unit must be positioned in a manner that prevents combustible material accumulation underneath. Failure to do so could result in death or serious injury. (000147)

Comply with regulations the Occupational Safety and Health Administration (OSHA) has established, or with equivalent standards. Also, verify that the unit is applied, used, and maintained in accordance with the manufacturer's instructions and recommendations. Do nothing that might alter safe application/usage and render the unit in noncompliance with the aforementioned codes, standards, laws, and regulations.

Explosion Hazards

DANGER

Explosion and fire. Fuel and vapors are extremely flammable and explosive. No leakage of fuel is permitted. Keep fire and spark away. Failure to do so will result in death or serious injury. (000192)

DANGER

Explosion and fire. Connection of fuel source must be completed by a qualified professional technician or contractor. Incorrect installation of this unit will result in death, serious injury, and property and equipment damage.

(000151a)

DANGER

Risk of fire. Allow fuel spills to completely dry before starting engine. Failure to do so will result in death or serious injury.

(000174)

WARNING

Risk of Fire. Hot surfaces could ignite combustibles, resulting in fire. Fire could result in death or serious injury.

(000110)

Battery Hazards

DANGER

Electrocution. Do not wear jewelry while working on this equipment. Doing so will result in death or serious injury.

(000188)

WARNING

Explosion. Do not dispose of batteries in a fire. Batteries are explosive. Electrolyte solution can cause burns and blindness. If electrolyte contacts skin or eyes, flush with water and seek immediate medical attention.

(000162)

WARNING

Explosion. Batteries emit explosive gases while charging. Keep fire and spark away. Wear protective gear when working with batteries. Failure to do so could result in death or serious injury.

(000137a)

WARNING

Electrical shock. Disconnect battery ground terminal before working on battery or battery wires. Failure to do so could result in death or serious injury.

(000164)

WARNING

Risk of burns. Batteries contain sulfuric acid and can cause severe chemical burns. Wear protective gear when working with batteries. Failure to do so could result in death or serious injury.

(000138a)

WARNING

Risk of burn. Do not open or mutilate batteries. Batteries contain electrolyte solution which can cause burns and blindness. If electrolyte contacts skin or eyes, flush with water and seek immediate medical attention.

(000163a)

WARNING

Environmental Hazard. Always recycle batteries at an official recycling center in accordance with all local laws and regulations. Failure to do so could result in environmental damage, death, or serious injury.

(000228)

Always recycle batteries in accordance with local laws and regulations. Contact your local solid waste collection site or recycling facility to obtain information on local recycling processes. For more information on battery recycling, visit the Battery Council International website at: ***http://batterycouncil.org***

General Rules

DANGER

Loss of life. Property damage. Installation must always comply with applicable codes, standards, laws and regulations. Failure to do so will result in death or serious injury.

(000190)

DANGER

Electrical backfeed. Use only approved switchgear to isolate generator from the normal power source. Failure to do so will result in death, serious injury, and equipment damage.

(000237)

WARNING

Equipment damage. Only qualified service personnel may install, operate, and maintain this equipment. Failure to follow proper installation requirements could result in death, serious injury, and equipment or property damage.

(000182a)

WARNING

Electrocution. Refer to local codes and standards for safety equipment required when working with a live electrical system. Failure to use required safety equipment could result in death or serious injury.

(000257)

⚠WARNING

Consult Manual. Read and understand manual completely before using product. Failure to completely understand manual and product could result in death or serious injury. (000100a)

- Follow all safety precautions in the owner's manual, installation guidelines manual, and other documents included with your equipment.
- Never energize a new system without opening all disconnects and breakers.
- Always consult your local code for additional requirements for the area in which the unit is being installed.
- Incorrect installation can result in personal injury and damage to the generator. It may also result in the warranty being suspended or voided. All the instructions listed below must be followed including location clearances and pipe sizes.

Before You Begin

- Contact the local inspector or city hall to be aware of all federal, state, and local codes which could impact installation. Secure all required permits before installing.
- Carefully read and follow all procedures and safety precautions detailed in this installation manual. Contact an IASD for assistance if any portion of the installation manual, technical manual, or other factory-supplied documents is not completely understood,
- Fully comply with all relevant NEC, NFPA, and OSHA standards, as well as all federal, state, and local building and electric codes. This unit must be installed in accordance with current NFPA 37 and NFPA 70 standards, and any other federal, state, and local codes for minimum distances from other structures.
- Verify the capacity of the natural gas meter or LP tank in regards to providing sufficient fuel for both the generator and other household and operating appliances.

Standards Index

⚠WARNING

Loss of life. This product is not intended to be used in a critical life support application. Failure to adhere to this warning could result in death or serious injury. (000209b)

- Strictly comply with all applicable national, state, and local laws, as well as codes or regulations pertaining to the installation of this engine-generator power system. Use the most current version of applicable codes or standards relevant to the local jurisdiction, generator used, and installation site.

NOTE: Not all codes apply to all products and this list is not all-inclusive. In the absence of pertinent local laws and standards, the following publications may be used as a guide (these apply to localities which recognize NFPA and ICC).

1. National Fire Protection Association (NFPA) 70: The NATIONAL ELECTRIC CODE (NEC) *
2. NFPA 10: Standard for Portable Fire Extinguishers *
3. NFPA 30: Flammable and Combustible Liquids Code *
4. NFPA 37: Standard for Stationary Combustion Engines and Gas Turbines *
5. NFPA 54: National Fuel Gas Code *
6. NFPA 58: Standard for Storage and Handling Of Liquefied Petroleum Gases *
7. NFPA 68: Standard On Explosion Protection By Deflagration Venting *
8. NFPA 70E: Standard For Electrical Safety In The Workplace *
9. NFPA 99: Health Care Facilities Code*.
10. NFPA 101: Life Safety Code*
11. NFPA 110: Standard for Emergency and Standby Power Systems *
12. NFPA 211: Standard for Chimneys, Fireplaces, Vents, and Solid Fuel Burning Appliances *
13. NFPA 220: Standard on Types of Building Construction *
14. NFPA 5000: Building Code *
15. International Building Code **
16. Agricultural Wiring Handbook ***
17. Article X, NATIONAL BUILDING CODE
18. ASAE EP-364.2 Installation and Maintenance of Farm Standby Electric Power ****
19. ICC:IFGC

This list is not all-inclusive. Check with the Authority Having Local Jurisdiction (AHJ) for any local codes or standards which may be applicable to your jurisdiction. The above listed standards are available from the following Internet sources:

* ***www.nfpa.org***

** ***www.iccsafe.org***

*** ***www.rerc.org*** Rural Electricity Resource Council P.O. Box 309 Wilmington, OH 45177-0309

**** ***www.asabe.org*** American Society of Agricultural & Biological Engineers 2950 Niles Road, St. Joseph, MI 49085

Section 2: Installation Planning

Unit Drawings

Installation Drawings

Installation drawings show weights, dimensions, clearances, exhaust details, connection locations, wiring stub-ups, lifting locations, and other information. Use the unit specific installation drawings when designing a site installation plan. Thoroughly read the NOTES section of each drawing for important details.

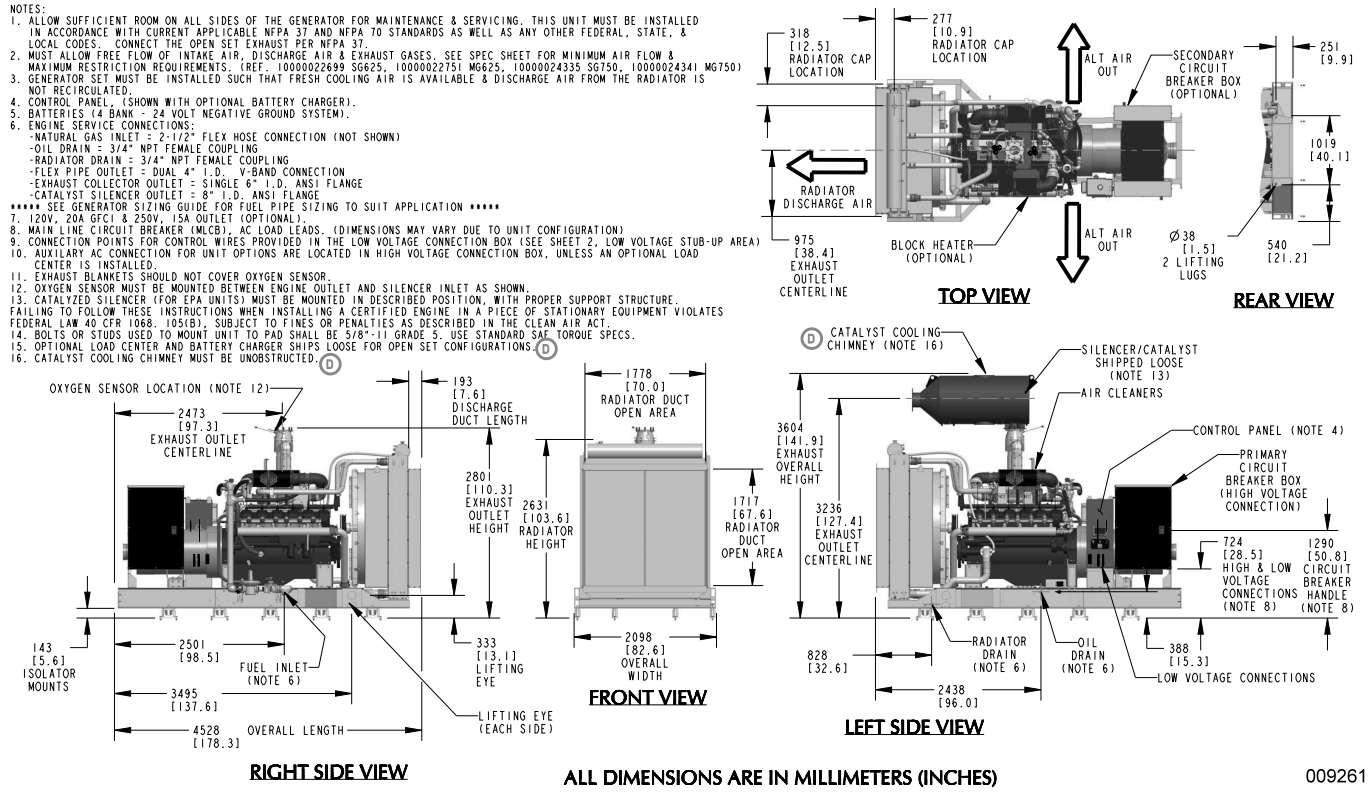

Figure 2-1. Typical Installation Drawing

Wiring Diagrams

Wiring and schematic diagrams show the connection points for control wiring, load wiring, and any service power supply required for items such as battery chargers and block heaters. Always use the unit specific wiring diagrams during planning and installation.

Receiving

Receiving and Unpacking

Handle shipping cartons and crates with care to avoid damage. Store and unpack cartons with the correct side up, as noted by the label on the shipping carton.

Inspection

Carefully inspect the generator set and all contents of cartons for any damage that may have occurred during shipment. See the shipping documentation for any provisions or guidance when damage is incurred. Correct all damage or deficiencies before installation of the generator set.

Storage Before Installation

Long Term Storage

If the unit is to be stored (or installed and not started up) for six months or more, preserve in accordance with the manufacturer's instructions. Contact an IASD to obtain the Long Term Preservation and Storage Manual (Part No. 0G4018) and the Preservation Checklist (Part No. 0G4018A).

Short Term Storage

If the unit is to be stored (or installed and not started up) for less than six months, proceed as follows:

- Place the unit on a smooth flat surface. Do not leave unit on the shipping pallet, as it leaves the bottom open for entry of dirt, debris, insects, and rodents.
- Leave exhaust system openings covered.
- Leave plastic plugs in fuel connection points.
- Use anti-rodent plugs and other enclosure features to prevent entry of birds, small animals, and foreign objects.
- If it is an open unit exposed to the elements (stored outside or the surrounding structure is not completed), completely cover to prevent entry of water, dirt, and dust.

Lifting

WARNING

Personal injury. Failure to properly connect lifting cables, chains, or straps could result in death, serious injury, or property damage.

(000346)

WARNING

Personal Injury. Do not use lifting hook if there are signs of damage or corrosion. Doing so could result in death, serious injury, or property damage.

(000349)

WARNING

Personal Injury. Do not use lifting hook other than as directed. Failure to do so could result in death, serious injury, or property damage.

(000350)

WARNING

Personal Injury. Verify all fasteners are properly tightened prior to lifting unit. Failure to do so could result in death, serious injury, or property damage.

(000351)

WARNING

Personal injury. Excessive weight. Use only appropriate lifting eyes and lifting equipment to lift unit. Improper lifting techniques could result in equipment damage, death or serious injury. (000224)

To ensure personal safety and prevent damage to the unit, use only personnel experienced with rigging, lifting and moving heavy machinery. Use a spreader bar to prevent damage to the unit.

IMPORTANT NOTE: Failure to use a spreader bar will result in scratches and damage to painted surfaces on closed generator sets. Likely equipment or component damage may occur on open generator sets.

Installation drawings show the lifting points and the CG (center of gravity) location for rigging and lifting purposes. Always attach lifting and rigging devices at the designated points on the generator set.

IMPORTANT NOTE: See *Figure 2-2*. Do not use the lifting points of the engine or alternator (A) to move the generator set. Use the lifting eyes (B).

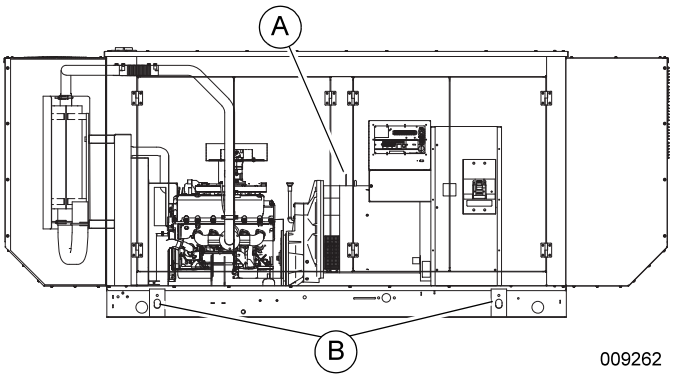

Figure 2-2. Lifting Points (Example)

Generator Location

Locate the generator set so it is readily accessible for maintenance, repair, and firefighting purposes. For outdoor and rooftop installations, comply with code requirements for minimum distance from combustible walls and building openings. For indoor installations, adhere to requirements for fuel supply, ventilation, exhaust ducting, and proximity to combustible materials.

General Location Guidelines

Consider the following:

- The supporting structure must be adequate for the generator set and its accessories.
- For roof-mounted applications, consideration should be given to the support strength of the structure and the need for vibration isolation. Contact a structural engineer for recommendations.
- Verify the site is clean, dry, not subject to flooding, and provided with adequate drainage in the event of heavy rains.
- Verify the location permits noise and vibration to be effectively isolated.
- Verify the site provides easy access to the generator set for maintenance, repair, and firefighting purposes.
- Keep a minimum of five feet of clearance around each side of the generator set to facilitate the repair or replacement of major components.
- Verify the location permits engine exhaust gases to be piped safely away from inhabited or occupied areas. Consider the direction of prevailing winds to prevent exhaust gases from being carried back to the engine area or to the fresh air intake vents of nearby buildings.
- The site must allow for the provision of an adequate fuel supply. For gaseous units, consider the length and diameter of pipe required to provide adequate fuel volume and pressure for the unit to run at its full load capacity. For diesel units, consider the ease of accessibility for refueling purposes.
- Verify the location permits sufficient air flow for cooling and ventilation. For indoor applications, keep supply air and radiator outlet air ducting to a minimum. For outdoor applications, consider the proximity of any walls, fences, or other noise abatement or security barriers. For outdoor units with enclosures, do NOT face the radiator discharge end of the enclosure into the prevailing wind.
- In cold weather locations, consider heating of the enclosure (which may be required by application). For indoor units with supply air ventilation, consider a means to control ambient air temperature in extreme cold conditions.
- Verify the unit is securely fastened to the mounting pad to prevent movement caused by vibration.
- Verify all fuel, coolant, exhaust, and electrical connections have flexible sections to isolate vibration. Exhaust systems must also allow for thermal expansion and contraction. Cracks and fractures, with the resulting leakage, can develop rapidly without proper vibration isolation.

Weather Considerations

Consider local weather conditions during installation. There are various accessories available to ensure fast, reliable starting and operation regardless of local climatic conditions. Enclosed unit heaters, engine jacket water heaters, lube oil heaters, and battery warmers make starting of the engine more dependable and reliable. Strip heaters for the alternator and control cabinets eliminate condensation by maintaining the temperature above the dew-point.

IMPORTANT NOTE: Failure to comply with the location guidelines can result in damage to the generator or surrounding area and may cause the warranty to be suspended or voided. Extra repair labor or equipment may not be covered under the warranty if service access is difficult or restricted.

This page intentionally left blank.

Section 3: Foundations and Mounting

Generator Foundations

Install the generator set on a concrete pad or base slab able to support its weight and accessories. A proper foundation is needed to resist dynamic loading and reduce transmitted noise and vibration. The exact composition of the mounting pad must follow standard engineering practices for the required loading and application. Securely fasten the generator set to the foundation using suitable grade, size, and style fasteners. Holes are provided in the steel frame rails for this purpose.

Concrete Pad

Seat the concrete pad or base slab on a prepared solid subsurface and use appropriate reinforcing bar or expanded wire mesh. A common specification calls for 2,500 psi concrete reinforced with 8 gauge wire mesh or number 6 reinforcing bars on 12 in (30.5 cm) centers.

Dimensions

Extend the concrete pad beyond the frame of the unit at least 18 in (457 mm) and above the surrounding surface by 3 to 8 in (76 to 203 mm). This provides a mounting surface for fuel line support, as well as space for maintenance and repair.

The base pad must be:

- Capable of supporting 125% of the unit wet weight for single unit applications. Wet weight is the dry weight plus the weight of the fuel in the base tank and all fluids in the generator set.
- Flat and level to within 1/2 in (13 mm).
- Capable of withstanding severe torque reactions on those units which are part of a paralleling system.

Unit Clearance

Verify the site provides easy access to the generator set for maintenance, repair, and firefighting purposes. Keep a minimum of 5 ft (152 cm) of clearance around each side of the generator set to facilitate the repair or replacement of major components.

Roof Installation and Protection

Contact a structural engineer to verify the roof design is capable of supporting the full weight of the generator and of handling any vibration or movement produced by the application of load.

IMPORTANT NOTE: While consultations with a qualified structural engineer are necessary for specific recommendations regarding support strength for roof top installations, the generator set must be supported at every anchor bolt hole location on the frame.

Install a layer of non-combustible insulation and a layer of sheet metal under the unit. Extend both the layer of insulation and sheet metal beyond the generator base at least 12 in (30.5 cm) on all sides. See ***Figure 3-1***.

A containment dike with specific capacities for fuel and oil spillage is also required.

Combustible Floor Protection

Install a layer of non-combustible insulation topped with a layer of sheet metal under the unit. Extend both the layer of insulation and sheet metal beyond the generator base at least 12 in (30.5 cm) on all sides. See ***Figure 3-1***.

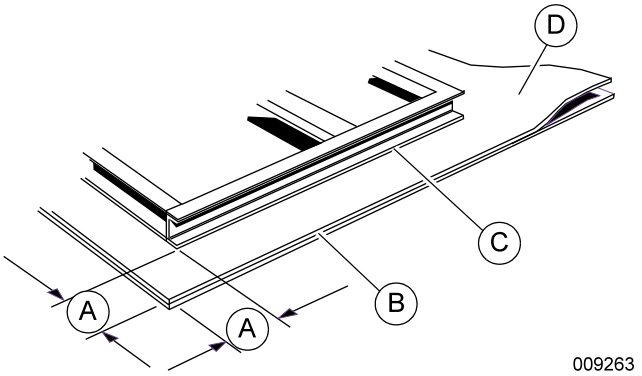

Figure 3-1. Combustible Floor and Roof Protection

A	12 in (30.5 cm) minimum
B	Insulation
C	Generator mounting base
D	Sheet metal

Stub Up Area

For load conduit, auxiliary power conduit (high voltage), and control wiring conduit (low voltage), see the installation drawings for the location and dimensions of the stub up areas. See ***Figure 3-2***.

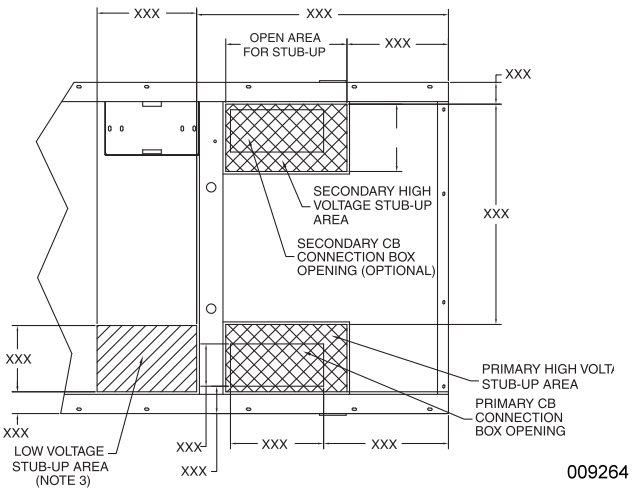

Figure 3-2. Typical Installation Drawing Stub Up Detail

Mounting

Fixed Foundation

Use mounting holes in the base frame to fasten the unit to the foundation. Always use hardware of a suitable grade, size, and style.

Bottom Enclosure

For generator sets with open bottoms using spring mounts between the frame rails and the mounting surface, or mounted on an open bottom foundation (example: steel I-beams or grating surfaces), the bottom of the unit must be enclosed to prevent entry of foreign objects and to prevent recirculation of hot radiator exhaust air. It must be covered with a metal plate to keep out foreign objects (birds, rodents, insects, dirt, and debris) and to protect internal components and wiring.

Connections

All fuel, coolant, exhaust, and electrical connections must have flexible sections where they connect to the unit to isolate vibration. Cracks, fractures, and leaks can develop without proper vibration isolation. Properly support and secure all piping before installing the flexible connection.

Tie Down Holes

See ***Figure 3-3***. To protect internal components and wiring, and to prevent entry of dirt, debris, and other foreign objects, plugs (A) are provided (as applicable) to cover tie-down holes in the base frame (B).

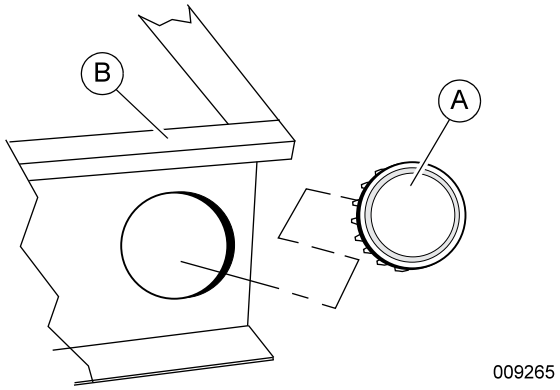

Figure 3-3. Frame Tie-Down Hole Plugs

Section 4: Ventilation System

General

WARNING

Equipment and property damage. Do not alter construction of, installation, or block ventilation for generator. Failure to do so could result in unsafe operation or damage to the generator. (000146)

Adequate and unobstructed flow of cooling and ventilating air is critical to prevent buildup of explosive gases and to ensure safe generator operation. Do not alter the installation or permit even partial blockage of ventilation provisions. Keep area around the generator clean and uncluttered, and remove any materials that may pose a hazard.

Outdoor Installations

For units installed outdoors in their factory provided enclosures, the installation design must ensure there are no obstructions at any of the air intakes which may impede intake airflow.

Clearance

Keep a minimum of 5 ft (152 cm) of clearance around the unit to facilitate service and maintenance, and to ensure adequate air circulation for air intakes and cooling of exhaust discharges.

Indoor Installations

Ventilation

Adequate ventilation is a key consideration for indoor installations to meet cooling requirements and to supply sufficient air for combustion. The unit specification sheets provide the cooling and combustion air requirements.

- **Cooling Air** is required to remove heat generated by the unit during operation. It passes through the alternator, over the engine, through the radiator and is then evacuated through appropriate ducting.
- **Combustion Air** is required by the engine for combustion. It flows through the air filter, the engine intake and combustion chambers and then exits through the engine exhaust system.

Ventilation Practices

- Louvers have resistance to air flow. Openings with louvers should be twice the area of an unobstructed opening to provide proper air flow. At times duct work is necessary to provide cooling air for the room. Duct work must be sized and installed according to acceptable standards.
- Verify any motorized louvers have power during all modes of operation.
- In some extreme cold weather applications, the opening of louvers immediately upon startup can cause carburetor icing and vaporizing problems with engines using gaseous fuels. Consider thermostatically controlled louvers to reduce the problems encountered in cold weather applications.
- Verify the location permits sufficient air flow for cooling and ventilation. For indoor applications, keep supply air ducting to a minimum. For outdoor applications, consider the proximity of any walls, fences, or other noise abatement or security barriers which may inhibit air flow.

Air Flow

See ***Figure 4-1***. The air intake inlets (A) and exhaust outlets (B) in an engine room or enclosure should be in-line to provide engine cooling airflow parallel with the generator. Air flow travels through the alternator, across the engine, through the radiator and then out through exhaust ducting.

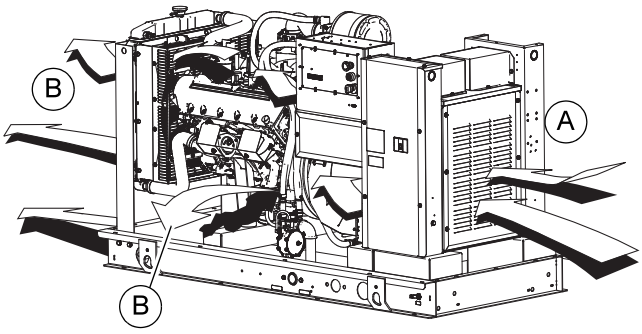

009266

Figure 4-1. Generator Airflow

Louvers

See ***Figure 4-2***. Louvers prevent entry of wind driven rain, snow, and debris. Face intake louvers into the prevailing wind and angle all louvers so rain and snow do not pass directly through.

Size louvers to provide more than the required air flow. Louvers have resistance to air flow, so openings with louvers should be twice the area of an unobstructed opening. Louver manufacturers will provide flow rate capacities to match size of louver openings to airflow requirements.

Use motor operated louvers or properly designed and sized gravity louvers to minimize static pressure drop. Verify louvers face inward for air intake. Verify any motorized louvers have power during all modes of operation.

Intake louvers in engine rooms are usually located high on a wall, but the required quantity of air flow may necessitate an entire wall of louvers. Use ducting to direct fresh intake air toward the generator to help promote the correct air flow.

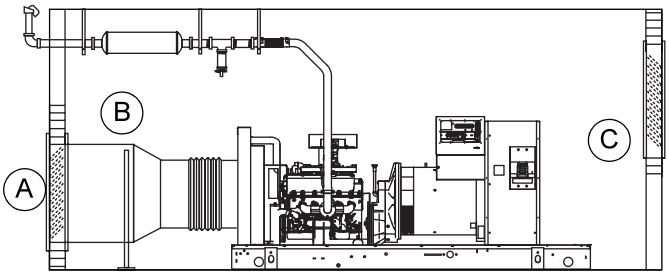

009267

Figure 4-2. Indoor Installation Example

A	Exhaust louver
B	Radiator duct
C	Intake louver

Motorized Louvers

Motorized louvers may be used in extremely cold climates to improve ambient temperature within the generator space when the unit is not operating. The following requirements apply to the use of motorized louvers:

- Verify the louvers open automatically when the generator starts. This may be accomplished with a spring loaded mechanism that does not require power. When the generator shuts down, the louvers “power” to a reset or closed position.
- Connect the power circuit for the louvers to a circuit powered by the generator.
- Wind blowing against intake openings can blow open gravity louvers causing low temperature and moisture problems in bad weather. In cold climates, the high volume of outside air drawn into the room can quickly reduce temperatures to freezing. Any water piping or other equipment susceptible to freeze damage should be properly insulated or located elsewhere. Thermostatically controlled louvers can be used to help maintain stable engine room temperatures in cold climate conditions. Again, connect the louver power circuit to a circuit powered by the generator.

Section 5: Exhaust System

Best Practices

A well-designed exhaust system collects exhaust gases from the engine cylinders and discharges it safely and efficiently. For optimal performance, the exhaust system must conform to the following.

- Use flanged exhaust pipe rated for at least 1,500 °F (816 °C) and constructed of schedule 40 black iron, steel, or other suitable materials having adequate strength and durability.
- Minimize resistance to exhaust gas flow (backpressure) and keep it within the specified limits.
- Reduce exhaust noise to meet local regulations.
- Provide adequate clearance between exhaust system components and engine parts, machine structures, enclosures, and building structures to minimize the impact of high exhaust temperatures.
- Use a flex joint between the engine connection point and the rigid piping.
- Verify the system does not stress engine components such as turbochargers and exhaust manifolds with excess weight.
- Use flexible bellows to allow for linear or axial movement of rigid piping due to thermal expansion or contraction.
- Use sweep elbows with a radius at least three times the pipe diameter.
- Verify exhaust system components are able to reject heat energy.
- Properly support and connect exhaust piping and silencers. Verify no strain or excessive weight is placed on the flex coupling connected to the engine. Flex couplings are only used to isolate vibration. Do not use flex couplings to correct alignment problems or carry the weight of a silencer or piping system.
- Slope exhaust piping away from the engine outlet and install a water trap with drain at the lowest point. Installation of a water (condensate) drain at the outlet of the silencer is also recommended.
- Properly terminate exhaust piping outside a structure housing a generator set, so hot gases are harmlessly discharged and do not come into contact with any combustible surface or material.
- Do not terminate exhaust piping under loading platforms, structures, or near any opening in a building.
- Provide at least 9 in (22.9 cm) of clearance between exhaust piping and any combustible surface.
- Guard exhaust piping to prevent burns, where necessary.
- Do not wrap or shield “dry” turbochargers and exhaust manifolds.
- Keep exhaust piping clear of fuel tanks and fuel lines.
- Use a ventilated thimble to guard exhaust piping if routing through combustible walls or roofs.
- Terminate piping on horizontal exhaust stacks with a 45º tailpipe.
- Size the effective opening area of exhaust louvers 25% to 50% larger than the engine radiator core effective opening.
- Verify the backpressure measured at the air-out side of the radiator never exceeds the maximum allowable backpressure specified by the manufacturer.
- Keep the ductwork from the radiator outlet flange to the exhaust vent opening as short and straight as possible.
- Install the ductwork from the radiator outlet flange to the exhaust vent opening in a manner that prevents any recirculation of exhaust air back to the generator area.
- Design extended exhaust ductwork with as few bends as possible. Where bends are necessary, they should be in the form of gradual sweeps (large radius bends) to allow airflow with minimum restriction.
- Verify any motorized louvers have power during all modes of operation.
- For outdoor units, verify there are no obstructions at the exhaust discharge which may cause exhaust gases to circulate back to the air intakes. Recirculation of exhaust air will cause the unit to overheat.
- Exhaust system must be installed when indoors.
- Do not cover O_2 sensor (if equipped).

Emissions Compliance

Closed Units

The exhaust system is installed at the factory on units with enclosures. If safe operation requires the exhaust to be extended, contact an IASD for the recommended pipe size for the length of the run required. Extending the exhaust piping can cause excessive backpressure leading to loss of power and engine, and exhaust system overheating.

Open Units

Open units are intended for indoor installation in a suitably designed structure. Open units are shipped with the catalytic converter (if used) loose for on-site installation. For units with an exhaust catalyst, use the unit specific installation drawing to properly locate the oxygen (O_2) sensor for the emissions monitoring system. If the O_2 sensor and catalyst are not correctly installed, the emissions system will not work properly and the unit will not be in compliance with its EPA certification, conditions which may lead to engine damage.

Open units not requiring an exhaust catalyst may be ordered with a ship-loose silencer. See the installation drawings for length of piping from the engine connection to the silencer, size of engine exhaust outlet, and any other unit specific requirements.

System Components

The main components of the exhaust system are the exhaust manifold, turbocharger, wastegate, exhaust piping, and silencer.

Exhaust Manifold

Engine exhaust manifolds collect exhaust gases from each cylinder and channel them to an exhaust outlet. The manifold is designed to give minimum backpressure and turbulence. Generac uses a dry manifold design. Dry manifolds are cost effective and provide the maximum possible exhaust energy to the turbocharger, but they also radiate the most heat and reach the highest surface temperatures.

Gas engines run with a higher exhaust temperature compared to diesel engines. Due to high exhaust temperatures, heat shields and blankets are used to lower surface temperatures where required.

Heat Shields

NOTE: Installing non-approved heat shields or soft wrap can cause exhaust system damage. Damage from non-approved components is not covered under warranty.

Heat shielding is used to shield hot surfaces to protect components and operators from excessive heat. The use of heat shields depends on many factors including installation type, as well as environmental and legislative requirements.

Guards may also be an effective means of providing protection. Shields designed and supplied by Generac are suitable for this purpose. Any customer supplied and fitted shields must be carefully designed and installed so damage to the engine does not result. Customer supplied wraps and shields may increase component skin temperature possibly resulting in premature failure. Providing significant airflow around the shield can help reduce risk of damage.

Blankets (Soft Manifold Shields)

Blankets are made of an insulating layer of material spun of calcium, silica, magnesium, or other special fibers with a thermal cloth outer layer, and can be used to isolate both heat and noise. Blankets are held in place with stainless steel springs or wire laces.

Do not install blankets on exhaust manifolds, turbocharger housings, or other engine components. The use of manifold blankets can result in premature failure of exhaust manifold components.

NOTE: If equipped with an O_2 sensor, the insulation must clear the sensor a minimum of 4 in (10 cm) on either side.

Table 5-1. Recommended Exhaust Insulation Blankets

Manufacturer and Product	Maximum Continuous Use Temperature Rating
INSULFAB IF 1950 High Temperature	Up to 1,832 °F (1,000 °C)
INSULFAB IF 1953 Treated Glass Fabric	Up to 1,300 °F (704 °C)
INSULFAB IF 1954 Coated Glass Fabric	Up to 600 °F (316 °C)

Guards and Shields

Guards and shields are usually made of perforated sheet metal, and are installed with an air gap between the shield and the hot surface. With adequate airflow around the engine, the heat transfer from iron to air will lower the temperature of the shield considerably.

Turbochargers

Turbochargers are used to achieve higher engine power output by converting some of the energy (heat) in the exhaust gas stream into energy in the inlet system (resulting in raised inlet pressure or boost). The raised inlet pressure forces more air into the engine cylinders, thereby allowing more fuel to be burned, which results in higher power output.

See ***Figure 5-1***. Hot exhaust gases exit the cylinder and enter the turbine side of the turbocharger. The exhaust gases drive the turbine blades which in turn drive the compressor blades on the air intake side. High speed rotation compresses the intake air to provide more oxygen for combustion.

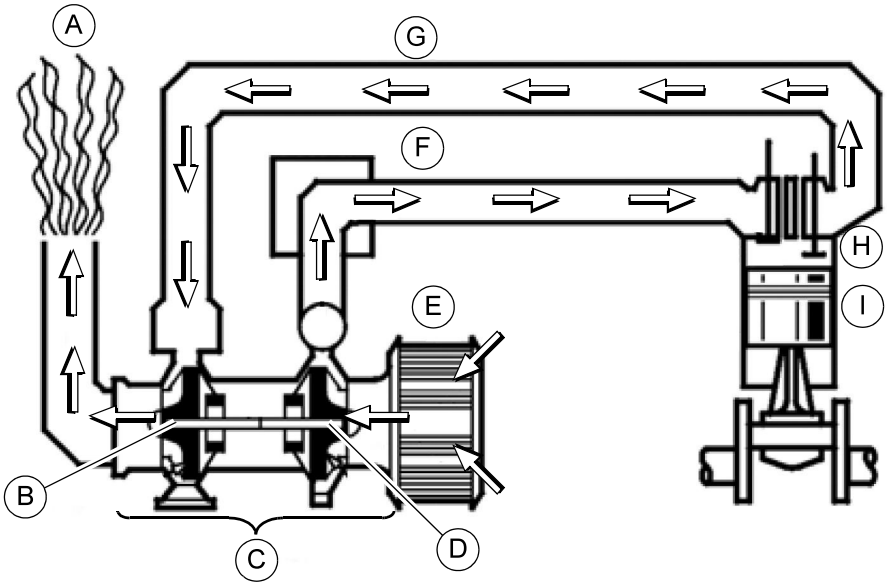

Figure 5-1. Turbocharger Operation

A	Exhaust	**F**	Aftercooler
B	Turbine blades	**G**	Exhaust gases
C	Turbocharger	**H**	Combustion chamber
D	Compressor blades	**I**	Piston
E	Air filter		

Wastegate

Turbochargers equipped with a wastegate can efficiently operate in a much broader range of altitudes and ambient temperature conditions. The wastegate opens at a predetermined pressure and vents some of the exhaust flow away from the turbocharger. The reduced exhaust flow slows the turbocharger to avoid overspeed and excessive boost pressure.

IMPORTANT NOTE: Tampering with the boost line to the wastegate will raise aftercooler heat rejection, increase turbocharger speed and peak engine cylinder pressure. These conditions may adversely affect engine stability, durability, emissions, and overall performance.

Flexible Exhaust Connections

Isolate the exhaust piping system from the engine with flexible connections designed for zero leakage. The flexible metal hose and bellow are the two types of flexible connections most commonly used.

The flexible metal hose allows for sideways or lateral deflection of the exhaust system due to vibration, while the flexible bellow permits linear or axial movement due to thermal expansion and contraction. The bellow, which is manufactured from stainless steel or other material suitable for high temperatures, is made up of a series of one or more convolutions, with the shape of the convolution designed to withstand the internal pressures of the pipe, but flexible enough to accept the axial and lateral angular deflections associated with thermal expansion and contraction.

Flexible Metal Hose and Bellows

The flexible metal hose is commonly used for exhaust systems with a pipe diameter of 6 in (150 mm) or less. The bellow type is typically used for exhaust systems with a diameter of 8 in (200 mm) or greater. Install flexible connections as close to the engine exhaust outlet as possible.

The primary functions of flexible exhaust connections are:

- To isolate the weight of the exhaust piping from the engine exhaust outlet.
- To protect exhaust components from excessive vibrational stresses.
- To allow some shifting of exhaust components due to thermal expansion and contraction, settling, or by torque reactions.

See ***Figure 5-2*** for a typical exhaust piping layout using flexible connections.

Flexible pipe connections, when insulated, must expand and contract freely within the insulation. This generally requires a soft material or insulated sleeve to encase the connection.

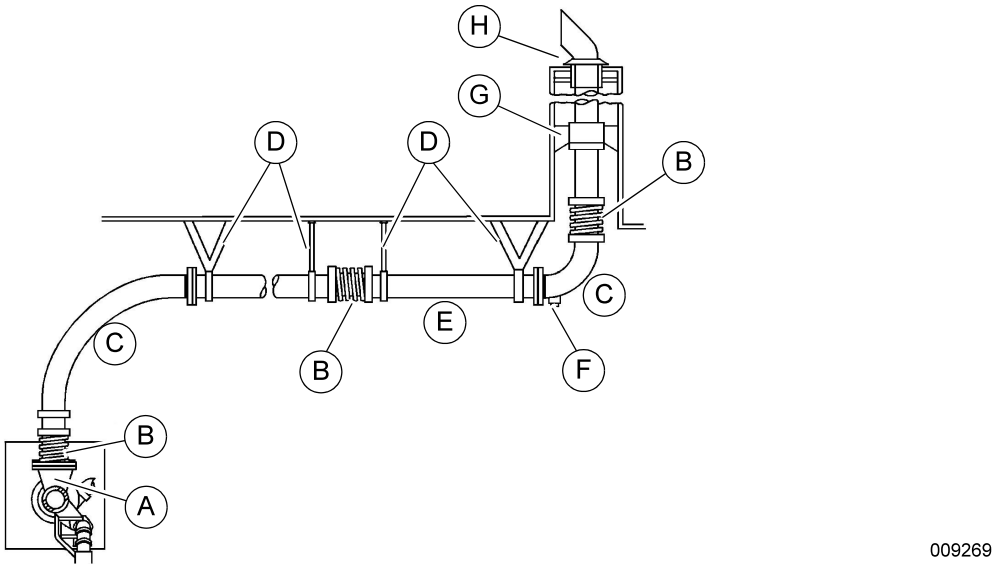

Figure 5-2. Typical Exhaust Piping Layout

A	Engine exhaust outlet	**E**	Slight tilt away from engine
B	Flexible pipe connection	**F**	Drain
C	Long sweep elbow	**G**	Vertical pipe support
D	Pipe support	**H**	Expansion sleeve with spray shield

Installing Flexible Connections

Pre-stretch flexible connections during installation to allow for expected thermal growth. Four small straps can be tack-welded between the two end flanges to hold the engine exhaust flexible connection or bellows in a rigid position during installation of exhaust piping. This prevents the bellows from being installed in a flexed condition. Attach a warning tag to the bellows noting the weld straps must be removed before starting the engine.

All flexible connections must have good fatigue resistance. They should give acceptable service life while withstanding vibratory stress and should be soft enough to prevent transmission of vibration beyond the connection.

For maximum durability, allow the bellows type connection to operate as close as possible to its free state.

Slip Joints

Slip joints are another method of handling the expansion and contraction of exhaust systems. Slip joints are designed to have controlled leakage when the system is cold. When the engine starts and the exhaust pipes warm up, the joints expand to make a gas-tight fit. The slip joints are flexible in only one direction and require good support on each side.

Generac does not normally recommend the use of slip joints due to disadvantages, such as leaking exhaust fumes, exhaust slobber, and the inability of the joint to flex in more than one direction.

Table 5-2. Installation Limits of Flexible Metal Hose

Hose Diameter (Inches)	A Maximum Offset Between Flanges		B Maximum Compression From Free Length		C Maximum Extension From Free Length	
	in	mm	in	mm	in	mm
4 and 5	1.0	25.4	0.25	6.25	0.25	6.25
6	1.5	38.1	0.25	6.25	0.25	6.25

Table 5-3. Installation Limits of Bellows

Bellow Diameter (Inches)	A Maximum Offset Between Flanges		B** Minimum Acceptable Convolution Gap		C Maximum Extension From Free Length	
	in	mm	in	mm	in	mm
	0.04	1.00	0.089	2.27	0.08	2.00
8 and 12	0.75	19.05	0.121	3.07	1.00	25.40
14	0.75	19.05	0.314	7.97	1.00	25.40
18	0.90	22.86	0.310	7.87	1.75	44.45
**DO NOT allow gaps in convolutions to be less than value indicated on part.						

Table 5-4. Spring Rate of Flexible Bellow

Bellow Diameter (Inches)	A Maximum Offset Between Flanges	
	Spring Rate	
	lb/in	kN/m
6	799	140.0
8	170	29.7
12	194	33.9
14	391	68.5
18	110	19.3

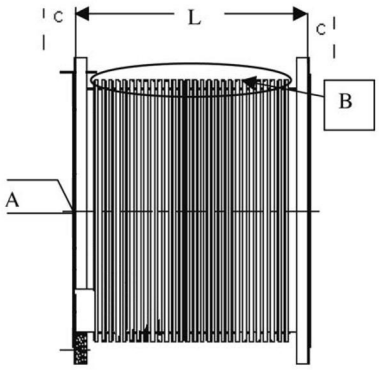

009270

Figure 5-3. Slip Joint (Typical)

Silencer

The silencer reduces exhaust noise before it is released to the atmosphere. Exhaust noise arises from the intermittent release of high pressure exhaust gas from the engine cylinders, causing strong gas pressure fluctuations in the exhaust system. This leads to discharge noise at the exhaust outlet, and also to noise radiation from exhaust pipe and silencer surfaces. A well designed and matched exhaust system significantly reduces noise from these sources. The silencer makes a major contribution to exhaust noise reduction.

Excessive noise is objectionable at most locations. The required degree of silencing depends on factors such as the application type, whether it is stationary or mobile and whether there are any local regulations regarding noise emissions. For example, excessive noise is objectionable in a hospital or residential area, but may be acceptable at an isolated pumping station.

Silencer Rating

Silencers are rated according to their degree of silencing as shown in *Table 5-5*.

Table 5-5. Silencer Ratings

Level	Rating	Sound Reduction	Description
1	Industrial	up to 12-18 dB	Suitable for industrial areas where background noise level is relatively high or for remote areas where partly muffled noise is permissible.
2	Residential	up to 18-25 dB	Reduces exhaust noise to an acceptable level in localities where moderately effective silencing is required, such as semi-residential areas where moderate background noise is always present.
3	Critical	up to 25-35 dB	Reduces exhaust noise to an acceptable level in localities where background noise level is low and more effective silencing is required, such as residential areas.
4	Hospital	up to 32-42 dB	Provides maximum silencing for residential, hospital, school, hotel, store, apartment building, and other areas where background noise level is lowest and generator set noise must be kept to a minimum.

Silencer Selection

The silencer is usually the largest single contributor to exhaust backpressure. Therefore, required noise reduction and permissible backpressure are both considered when selecting a silencer. Application type, available space, cost, and appearance also need to be taken into account.

To select a silencer, use silencer supplier data, corrected for outlet temperature and velocity, to determine the silencer size and type that satisfies noise reduction criteria with an acceptable maximum pressure drop.

After calculating pressure loss, it may be necessary to check a different silencer, or a different pipe size, before an optimum combination is found.

Silencer design is a highly specialized art. Responsibility for design and construction details should be left to the silencer manufacturer.

Silencer Installation

⚠WARNING

Equipment damage. Only qualified service personnel may install, operate, and maintain this equipment. Failure to follow proper installation requirements could result in death, serious injury, and equipment or property damage. (000182a)

⚠WARNING

Personal injury. Excessive weight. Use only appropriate lifting eyes and lifting equipment to lift unit. Improper lifting techniques could result in equipment damage, death or serious injury. (000224)

⚠WARNING

Personal Injury. Unit has a high center of gravity. Use caution when lifting and transporting unit. Failure to do so could result in death or serious injury. (000312)

See the unit specific drawings included with the unit for information on installing the silencer.

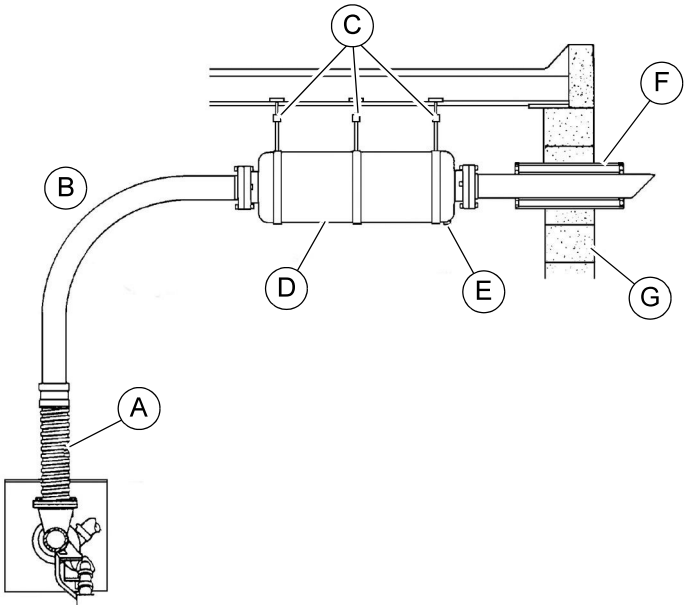

Figure 5-4. Typical Silencer

A	Flexible elbow	**E**	Drain
B	Long sweep elbow	**F**	Thimble
C	Brackets with vibration isolators	**G**	Outside wall
D	Silencer		

Exhaust System Piping

The function of the exhaust piping is to convey the exhaust gases from the engine exhaust outlet to the silencer and the exhaust system outlet. Piping is a key feature in overall exhaust system layout.

Exhaust System Design

The physical characteristics of the engine room determine the exhaust system layout. Design exhaust piping to minimize exhaust backpressure while also keeping engine serviceability in mind. Verify exhaust piping is securely supported. Use suitable flexible components to allow for system movement and to isolate vibration.

Design exhaust piping with engine service in mind. An overhead crane may be needed to service the heavy components on larger engines.

Other Considerations

The minimum requirements for the design of the exhaust system should be to contain explosions that could be encountered during the operation of the engine. The use of explosion relief valves is recommended on all gas engines, particularly the larger size engines due to high fuel volumes.

Locate pressure relief valves as close to the engine as possible (typically at piping elbows) to minimize potential exhaust system damage in the event of an exhaust explosion. Additional pressure relief valves can be used prior to the silencer, catalytic converter, or heat recovery equipment to add protection for these devices. Pressure relief valves are fitted on the exhaust pipe to relieve pressure in a safe manner and must be vented to a safe area. See local codes for details. Pressure relief valves can be purchased from after market suppliers.

- Install all piping with a minimum clearance of 9 in (22.9 cm) from combustible materials.
- Properly support the exhaust piping. This is especially important adjacent to the engine, so the weight of the exhaust piping is not borne by the engine or the turbocharger.
- Size exhaust piping according to the specified maximum backpressure limit.
- Where necessary, reduce heat radiation by covering off-engine exhaust piping with suitable, high temperature insulation blankets.
- Install metal thimble guards on exhaust piping which passes through wooden walls or roofs. Size the thimble guards so they are 12 in (30.5 cm) greater in diameter than the exhaust pipes. See ***Figure 5-4***.

- If used, extend exhaust stacks upward and away from the engine room to avoid heat, fumes and odors.
- Locate exhaust pipe outlets away from the air intake system. Engine air cleaners, turbochargers, and aftercoolers in contact with exhaust byproducts can experience premature failure.
- Avoid routing exhaust piping close to fuel pumps, fuel lines, fuel filters, fuel tanks, and other combustible materials.
- Cut exhaust pipe outlets at 30° to 45° angles (rather than 90°) to reduce exhaust gas turbulence and noise. See ***Figure 5-6***.
- Arrange exhaust outlets to keep water out of the piping system.
- Verify the silencer does not inhibit access to filters, engine, or add heat to radiator.

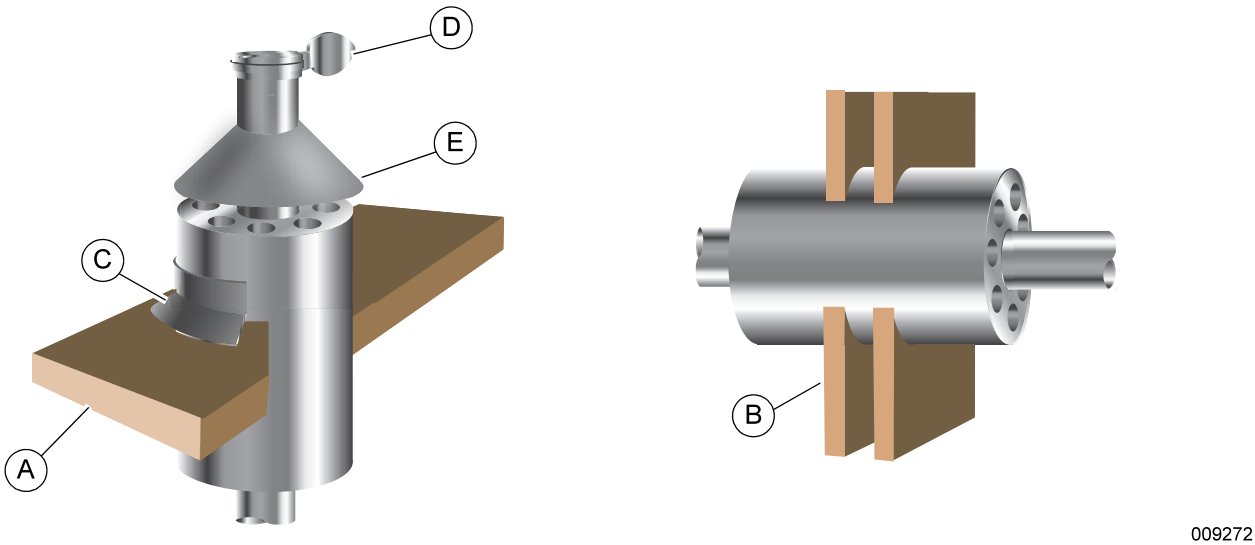

Figure 5-5. Exhaust Pipe Thimble Installation

A	Roof	**D**	Rain cap
B	Wall	**E**	Drip shield
C	Flashing		

Condensate Traps

Exhaust systems can accumulate a considerable amount of condensed moisture. For example, engines burning natural gas produce one pound of water for each 10 ft^3 of natural gas burned. Long runs of exhaust piping require traps to drain moisture. Install traps at the lowest point of the line near the exhaust outlet to prevent rain water from reaching the engine. Slope exhaust lines away from engine toward the trap, so condensation drains properly. See ***Figure 5-2***.

Exhaust Thimbles

See ***Figure 5-5***. Use exhaust thimbles for wall or ceiling penetrations. The thimble separates the exhaust pipe from the wall or ceilings to provide mechanical and thermal isolation. Single sleeve thimbles must have diameters at least 12 in (30.5 cm) larger than the exhaust pipe. Double thimbles with both inner and outer sleeves should have outside diameters at least 6 in (15.2 cm) larger than the exhaust pipe.

Exhaust Pipe Insulation

Do not locate exposed parts of the exhaust system near wood or other combustible material. Cover exhaust piping inside the engine room (and the silencer if mounted inside) with suitable insulation materials to protect personnel and to reduce room temperature and exhaust noise. Retain insulating material with a stainless steel or aluminum sheath.

Water Ingress Prevention

Design the exhaust system to prevent snow or rain from entering the engine through the exhaust outlet. Note that the method selected imposes restrictions which must be taken into account when calculating system backpressure.

One method used primarily with horizontal exhaust pipes is to angle cut the end as shown by A of ***Figure 5-6***.

A common method used with vertical exhaust pipes is to angle the pipe 45° or 90° from vertical, as shown by B of ***Figure 5-6***, using a suitable elbow, and then angle cut the end as just described.

Another practice that may be used with either method is to cut water drain slots into the exhaust pipe. Bend the engine side of the slots (C) inward and the downstream side of the slots (D) outward. Do not slot more than a 60° arc of the pipe circumference, however, or the integrity of the pipe may be compromised.

For applications where the above methods are not possible, it may be necessary to fit some form of rain cap to the end of the vertical pipe section. While this method can effectively prevent the entry of water, it may also impose an unacceptable backpressure restriction.

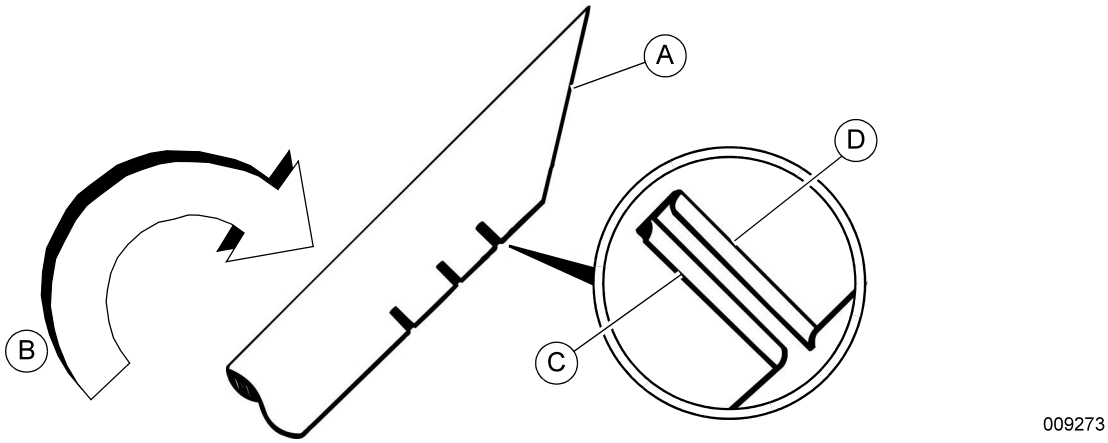

Figure 5-6. Water Drain Slots

A	Angle cut	**C**	Push engine side slot edges in
B	Angle pipe 45°	**D**	Pull discharge side slot edges out

Exhaust System Backpressure

Excessive exhaust restriction adversely affects performance, resulting in reduced power and increased fuel consumption, exhaust temperatures, and emissions. It also reduces exhaust valve and turbocharger life. Keep exhaust backpressure within specified limits. When designing an exhaust system, the target should be half the maximum allowable system backpressure.

Backpressure includes restrictions due to pipe size, silencer, system configuration, and other exhaust related components. Excessive backpressure can be caused by one or more of the following factors:

- Exhaust pipe diameter too small.
- Excessive number of sharp bends in the system.
- Exhaust pipe too long.
- Silencer resistance too high.

Engines with a vee type cylinder configuration should be designed so the exhaust piping gives equal backpressure to each bank.

Measuring Backpressure

Exhaust backpressure is measured as the engine is operating under full rated load and speed. Use either a water manometer or a gauge measuring inches of water.

Many engine installations are already equipped with a fitting for measuring backpressure. If the system is not equipped with a fitting, use the following guidelines to locate and install a pressure tap.

- Locate the pressure tap in a straight length of exhaust pipe before the silencer and as close to the turbocharger as possible.
- Locate the tap at least three pipe diameters from any upstream pipe transition.
- Locate the tap at least two pipe diameters from any downstream pipe transition.

For example, in a 4 in (10 cm) diameter pipe, place the tap no closer than 12 in (30 cm) downstream of a bend or section change. See A of ***Figure 5-7***.

Backpressure Tap Installation

See ***Figure 5-7***. If an uninterrupted straight length of at least five diameters (D and E) is not available, care should be taken to locate the probe as close as possible to the neutral axis of the exhaust gas flow. This is necessary because measurements taken on the outside of a 90° bend at the pipe surface will be higher than a similar measurement taken on the inside of the pipe bend.

1. Weld or braze a 1/8 NPT “half coupling” to the desired location on the exhaust pipe.
2. Drill a 0.12 in (3.05 mm) diameter hole through the exhaust pipe wall.
3. Remove any burrs on the inside of the pipe wall so that gas flow is not restricted.
4. Attach the gauge or gauge hose to the half coupling.
5. Insert the probe to a depth equal to half the diameter of the pipe or a minimum of 3 in (76.2 mm) (B).
6. Orient the probe so the groove in the tip is parallel with the exhaust gas flow (C).

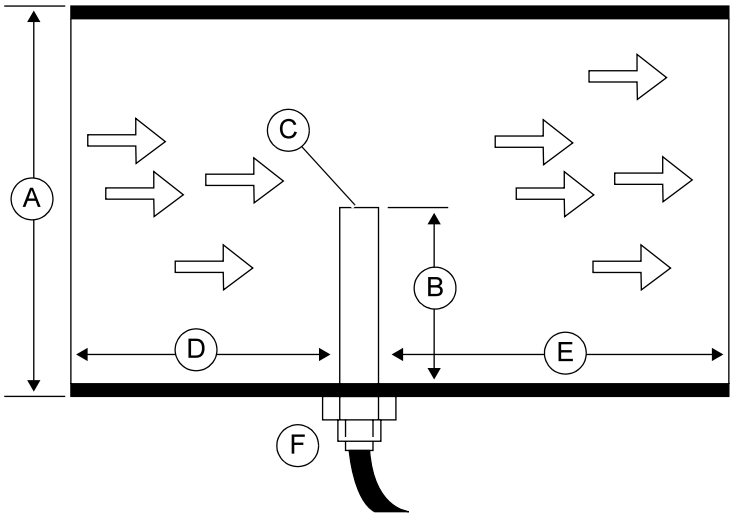

010666

Figure 5-7. Install Backpressure Test Port

A	Pipe diameter	**D**	2x pipe diameter
B	3 in minimum or 1/2 pipe diameter	**E**	3x pipe diameter
C	Probe tip cut parallel to exhaust flow	**F**	Pressure tap

Calculating Backpressure

Backpressure is calculated by:

$$P\ (kPa) = \frac{L \times S \times Q^2 \times 3.6 \times 10^6}{D^5} + P_s$$

$$P\ (in\ H_2O) = \frac{L \times S \times Q^2}{187 \times D^5} + P_s$$

Where:

P = Backpressure (kPa), (in H_2O)

psi = 0.0361 x in water column

kPa = 0.00981 x mm water column

L = Total Equivalent Length of pipe (m) (ft)

Q = Exhaust gas flow (m^3/min), (cfm)

D = Inside diameter of pipe (mm), (in)

S = Density of gas (kg/m^3), (lb/ft^3)

Ps = Pressure drop of silencer (kPa), (in H_2O)

Useful Conversion Factors:

psi = 0.0361 x in of water column

psi = 0.00142 x mm of water column

psi = 0.491 x in of mercury column

kPa = 0.0098 x mm of water column

kPa = 0.25 x in of water column

kPa = 3.386 x in of mercury column

kPa = 0.145 psi

Equivalent Length of Straight Pipe

To obtain equivalent length of straight pipe for various elbows:

$$L = \frac{33D}{X}$$ Standard Elbow, elbow radius = pipe diameter

$$L = \frac{20D}{X}$$ Long Elbow, radius = 1.5 diameter

$$L = \frac{15D}{X}$$ 45° Elbow

$$L = \frac{66D}{X}$$ Square Elbow

Where X = 12 in or 1,000 mm

As shown by the equations, if 90° elbows are required, long radius elbows with a radius of 1.5 times the pipe diameter helps to lower resistance.

Combined Exhaust Systems

A common exhaust system for multiple installations is not acceptable. Combined exhaust systems with boilers or other engines forces exhaust gases into engines not operating. Water vapor created during combustion condenses in cold engines and causes engine damage. Duct valves separating engine exhausts is also discouraged, as high temperatures warp valve seats causing leakage.

Exhaust draft fans have been applied successfully in combined exhaust ducts, but most operate only whenever exhaust is present. To prevent turbocharger windmilling (without lubrication), draft fans should not be operable when the engine is shut down. The exhaust system of engines not running must be closed and vented.

360° vee engines have two exhaust outlets, one for each bank. Combining these together with a Y-type fabrication may result in unequal thermal growth and backpressure from one bank to the other. This unequal growth can put unwanted loading onto the turbocharger mounting or the flex bellows. The unequal backpressure can adversely affect the operation and performance of the engine. If the exhaust outlets are joined, these problems may be minimized by providing a flexible connection on each leg and by keeping each leg equal in length.

Pipe Support Considerations

Thermal Growth

Thermal growth of exhaust piping must be taken into account to avoid excessive load on supporting structures.

Steel exhaust pipe expands 0.0076 in/ft (1.13 mm/m) for each 100 °F (38 °C) rise of exhaust temperature. This amounts to 0.65 in (16.5 mm) expansion for each 10 ft (3.05 m) of pipe from 100 °F to 950 °F (35 °C to 510 °C).

Design piping systems and locate supports so thermal growth expands away from the engine. Supports can reduce strains or distortions to connected equipment and can allow component removal without additional support.

A restraint member may be used to keep the ends of a long pipe run fixed in place, forcing all thermal growth towards the expansion joints.

Insulated flexible pipe connections must expand and contract freely within the insulation. This generally requires a soft material or insulated sleeve to encase the connection.

Turbocharger Loading

Carefully consider the load external piping may place on the turbocharger. To minimize the load carried by the turbocharger housing, place a bellows as close as possible to the turbocharger outlet and verify the downstream exhaust piping is self supporting. The thermal growth of horizontal piping connected to the turbocharger exhaust must also be taken into account.

Typically, the bellows and adapter, or elbow and bellows, is the maximum allowable loading on the turbocharger. All other external piping must be self-supporting. See ***Figure 5-8***.

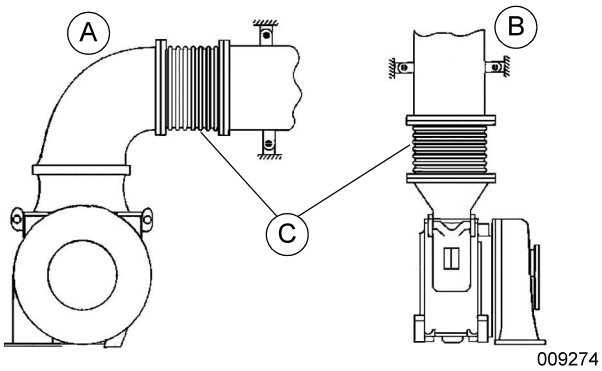

Figure 5-8. Horizontal and Vertical Exhaust Bellow

A	Horizontal
B	Vertical
C	Bellow

Vibration Transmission

Piping connected to stationary engines requires isolation, particularly when resilient mounts are used. Without isolation, pipes can transmit vibrations long distances. Isolator pipe supports should have springs to attenuate low frequencies and rubber or cork to minimize high frequency transmissions.

To prevent build up of resonant pipe vibrations, support long piping runs at unequal distances as shown in ***Figure 5-9***.

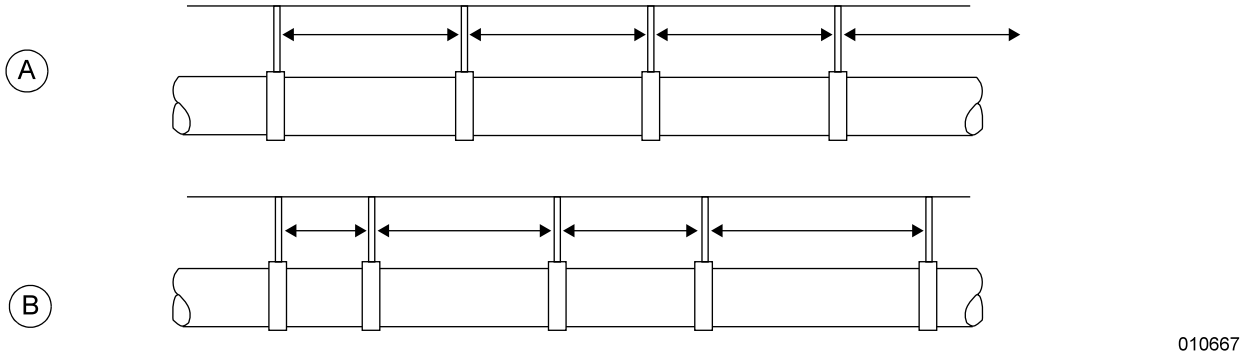

Figure 5-9. Support Pipe Runs at Unequal Distances

A	**Incorrect** - Support pipe runs at equal distances
B	**Correct** - Support pipe runs at unequal distances

Exhaust Discharge

Design exhaust outlets, whether exhaust pipe or stack, to ensure engine exhaust gas does not circulate back into the engine area. Engine air cleaners, turbochargers, and aftercoolers contaminated with combustion byproducts, such as hydrocarbons and soot, can experience premature failure.

Recirculation of hot exhaust gas can also adversely affect the ambient capability of the installation. This can occur when air that is significantly above ambient is drawn through radiator-equipped cooling systems. See ***Figure 5-10*** and ***Figure 5-11*** for exhaust piping systems designed to avoid recirculation of exhaust gases.

Exhaust Louvers

Louvers prevent entry of wind driven rain, snow, dust, and debris. Do not face exhaust louvers into the prevailing wind and angle all louvers so rain and snow do not pass through. Where the radiator and fan are located on the engine, wind blowing against an exhaust opening also creates restriction to the fan.

Size louvers to provide more than the required air flow. Louvers have resistance to air flow, so openings with louvers should be twice the area of an unobstructed opening. Louver manufacturers will provide flow rate capacities to match size of louver openings to airflow requirements.

Use motor operated louvers or properly designed and sized gravity louvers to minimize static pressure drop. Verify louvers face outward for exhaust discharge. Air guide or turning vanes can prevent exhaust air recirculation between the exhaust louvers and any barrier surface, so exhaust is routed upward into the atmosphere. Verify any motorized louvers have power during all modes of operation.

Common Exhaust Stack

The exhaust can be directed into a special stack that also serves as the outlet for radiator discharge air and may be sound insulated. In such instances the radiator discharge air enters below the exhaust gas inlet so the rising radiator air tends to cool exhaust system components within the stack. See ***Figure 5-10***.

The silencer may be located within the stack or in the room with its tail pipe extending through the stack and then outward. Install air guide vanes in the stack to turn radiator discharge airflow upward and to reduce radiator fan air flow restriction. Alternatively the sound insulation lining may have a curved contour to direct air flow upward.

An exhaust stack remains cooler and cleaner if the engine exhaust is contained within the exhaust piping throughout its run through the stack. If the exhaust pipe terminates short of the stack outlet, the discharged ventilation air will tend to cool the exhaust stack downstream of the point where it mixes with the exhaust gases.

See ***Figure 5-10*** for a vertically mounted and a horizontally mounted exhaust silencer. In both examples, the exhaust pipe and radiator air use a common stack.

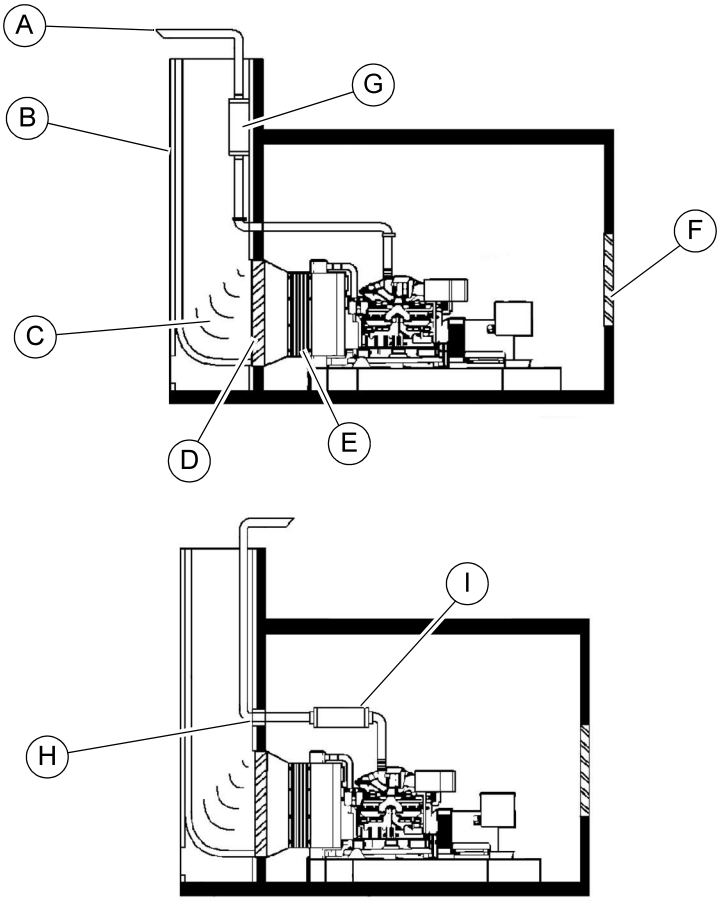

Figure 5-10. Typical Vertical (Top) and Horizontal (Bottom) Silencer

A	Horizontal pipe with angle cut	**F**	Air inlet louvers
B	Sound reducing material	**G**	Vertical silencer
C	Air guide valves	**H**	Sleeve and expansion joint
D	Exhaust louvers	**I**	Horizontal silencer
E	Pusher fan		

Power Module or Drop-Over Enclosure

For a generator set enclosed in a power module or drop-over enclosure, the exhaust and radiator discharges should flow together, either above or below the enclosure without a stack.

This arrangement prevents the recirculation of exhaust gases back into the module or enclosure. Sometimes, for this purpose, the radiator can be mounted horizontally, and the fan driven by an electric motor to discharge air vertically as shown in ***Figure 5-11***.

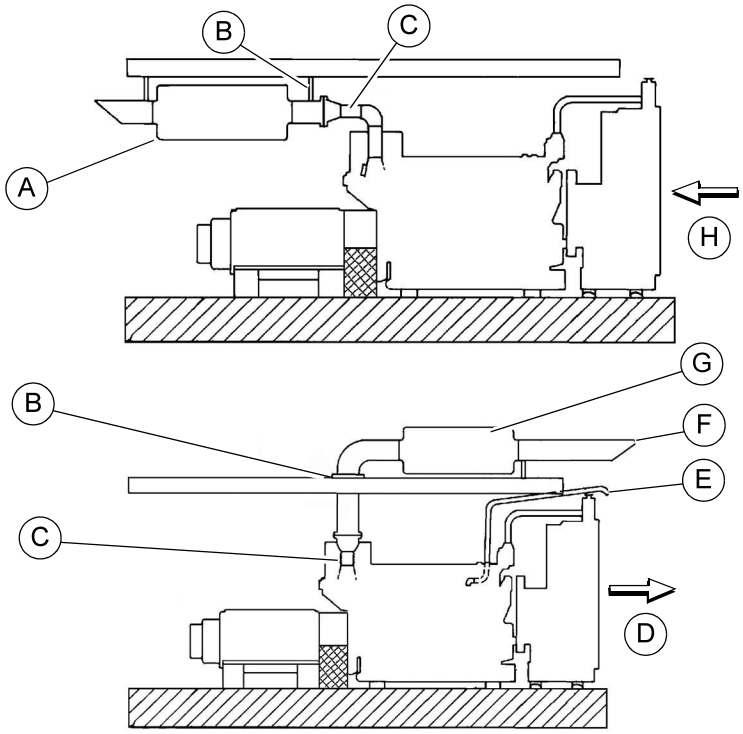

Figure 5-11. Internal and External Silencer

A	Insulated exhaust and silencer	**E**	Crankcase breather discharge tube
B	Exhaust support	**F**	Angle cut for noise reduction, bottom cut for drainage
C	Flex joint	**G**	Silencer
D	Blower fan	**H**	Suction fan

Cleanliness During Installation

During exhaust system assembly, cover all openings on the turbocharger with an identifiable blanking plate to prevent the entry of dirt and debris. Attach a warning tag to the plate to indicate it must be removed before the engine is started.

Slobber or Wet Stacking

Exhaust slobber is the black oily fluid which can leak from exhaust system joints. It consists of fuel and oil mixed with soot from the inside of the exhaust system.

Oil leakage may be the result of worn valve guides, piston rings, or turbocharger seals, while fuel leakage usually occurs with combustion problems.

Engines are designed to operate at loaded conditions. Extended engine operation at no load or lightly loaded conditions (less than 15% load) reduces the sealing capability of some integral engine components, even when the engine is new.

If slobber occurs, external signs of slobber will be evident, unless the exhaust system is completely sealed.

Exhaust slobber is not usually harmful to the engine, but can be unsightly. If extended idle or light load periods of engine operation are mandatory, the objectionable effect can be avoided by loading the engine to at least 30% load for approximately ten minutes every four hours. This removes any fluids which may have accumulated in the exhaust manifold.

This page intentionally left blank.

Section 6: Gaseous Fuel Systems

General

DANGER

Explosion and fire. Fuel and vapors are extremely flammable and explosive. No leakage of fuel is permitted. Keep fire and spark away. Failure to do so will result in death or serious injury. (000192)

Contact a local gas distributor or licensed plumber or installer when installing a gaseous fuel supply system or refer to information published by various federal agencies. For a list of some of these publications, see ***Standards Index***.

Fuel System Conversion

Industrial units come from the factory configured and EPA certified with the fuel system ordered. Any one of the following gaseous fuel systems may be installed:

- Natural Gas (NG)
- LP-Vapor Withdrawal
- LP-Liquid Withdrawal
- Dual-Fuel Consisting of NG (Primary) and LP-Vapor Withdrawal
- Dual-Fuel Consisting of NG (Primary) and LP-Liquid Withdrawal

To convert to a different fuel (for example, from NG to LP-Gas Vapor), contact your local IASD.

Gaseous Fuel Properties

Natural Gas

DANGER

Explosion and fire. Fuel and vapors are extremely flammable and explosive. No leakage of fuel is permitted. Keep fire and spark away. Failure to do so will result in death or serious injury. (000192)

Natural gas is lighter than air. It is found in the gaseous state at normal ambient temperatures and pressures. It is highly explosive and can be ignited by the slightest spark. For this reason, fuel lines must be free of leaks and adequate ventilation is absolutely essential. Local fuel and gas codes dictate the maximum pressure under which natural gas can be delivered to a site or structure. The supply pressure from the utility meter or regulator is usually not the same as that required by the generator set, so a separate primary regulator providing the correct pressure and volume of fuel to the generator set is required. If the local utility source pressure is less than that required by the generator, it is up to the local utility to provide the volume of gas at the required pressure.

Propane Vapor (LPV) and Propane Liquid (LPL)

DANGER

Explosion and fire. Fuel and vapors are extremely flammable and explosive. No leakage of fuel is permitted. Keep fire and spark away. Failure to do so will result in death or serious injury. (000192)

Liquefied Petroleum gas is heavier than air. The gas vapors are explosive and can be ignited by the slightest spark. LP Vapor is supplied by liquid propane stored in tanks. Propane exists in its liquid form at or below its boiling point of -44 ºF (-42 °C) as well as when it is stored under pressure. LP tank pressure is dependent on the ambient temperature and the liquid volume in the tank, and can be over 200 psi (1,379 kPa). For liquid propane vapor withdrawal (LPV), the gas is withdrawn from the top of the tank, above the liquid level. A first-stage regulator at the tank reduces the gas pressure to a lower line pressure value. This line pressure is then reduced to the correct operating pressure and volume for the generator set through the use of a second-stage regulator. For units which use propane in its liquid form (LPL), the tank uses a special fitting to allow for withdrawal of the liquid propane.

Gaseous Fuel Systems

Natural Gas System

The local utility will usually provide the piping (meter and pressure regulator) from the main distribution line to the generator site. The local utility is also responsible for providing gas at sufficient volume and pressure to operate the primary regulator, so the regulator can provide the correct volume of gas at the required pressure to the generator.

From the primary regulator, gas flows to the generator connection point, which is the end of the manufacturer supplied flexible fuel line. The flexible fuel line can be connected directly to the generator connection point (perpendicular to the frame rail), or by an elbow and short nipple to the frame rail itself (to run parallel to the frame rail). The nipple and elbow used must be the same pipe

size as the flexible fuel line and generator connection point. Install a flexible fuel line between the rigid supply piping and the gas connection at the generator, and must be installed straight without bends or kinks. The primary regulator outlet and the generator connection point must be sized correctly to provide the generator with the required volume and pressure (noted on the unit specification sheet) when it is operating at 100% of its rated load.

On the generator the unit mounted regulator (it may be either a demand regulator or a pressure regulator) and its associated shutoff valves control the flow and pressure to the unit for proper operation. The fuel pressure required for the generator to operate is always measured at the inlet of the unit mounted regulator. For the location of the pressure test connection, see ***Gas Pressure Test Port Location***. The supply pressure and volume must meet the requirements described in the unit specification sheet. If specifications are not met, the generator will not operate properly and will probably display symptoms, such as hard starting, rough running, inability to carry load, and erratic operation.

NOTE: Allow a minimum of 10 ft (305 cm) between the primary regulator and generator.

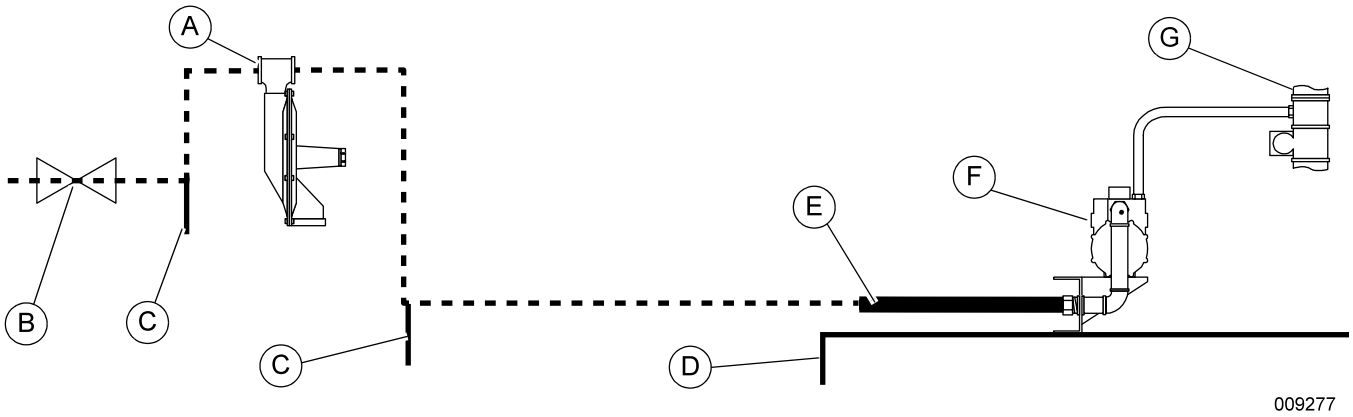

Figure 6-1. Typical NG Fuel System

A	Primary regulator	**E**	Flexible fuel line
B	Full flow shut off valve	**F**	Unit mounted regulator
C	Sediment trap	**G**	Actuator
D	Generator base		

LP-Vapor Withdrawal System

This type of system uses the vapors formed above the liquid fuel in the supply tank. The maximum tank fill capacity is 80% and a minimum of approximately 20% of the tank capacity is needed for fuel expansion from the liquid to vapor state. Gas pressure and volume requirements for an LP-Gas vapor system at the connection point of the generator are listed on the unit specification sheet.

Pressure regulation for vapor withdrawal systems is typically a two-step process. First, by reducing the high tank pressure to a lower line pressure with a first-stage regulator, then reducing the line pressure to the pressure required by the unit with a second-stage regulator.

The piping system connecting the outlet of the first stage regulator to the connection point on the second stage regulator must be properly sized to provide the fuel volume required by the unit at 100% load.

The piping system between the outlet of the second stage regulator and the generator connection point must be sized to provide the fuel volume required by the generator at 100% load while also staying within the pressure range noted on the unit specification sheet.

NOTE: Allow a minimum of 10 ft (305 cm) between the primary regulator and generator.

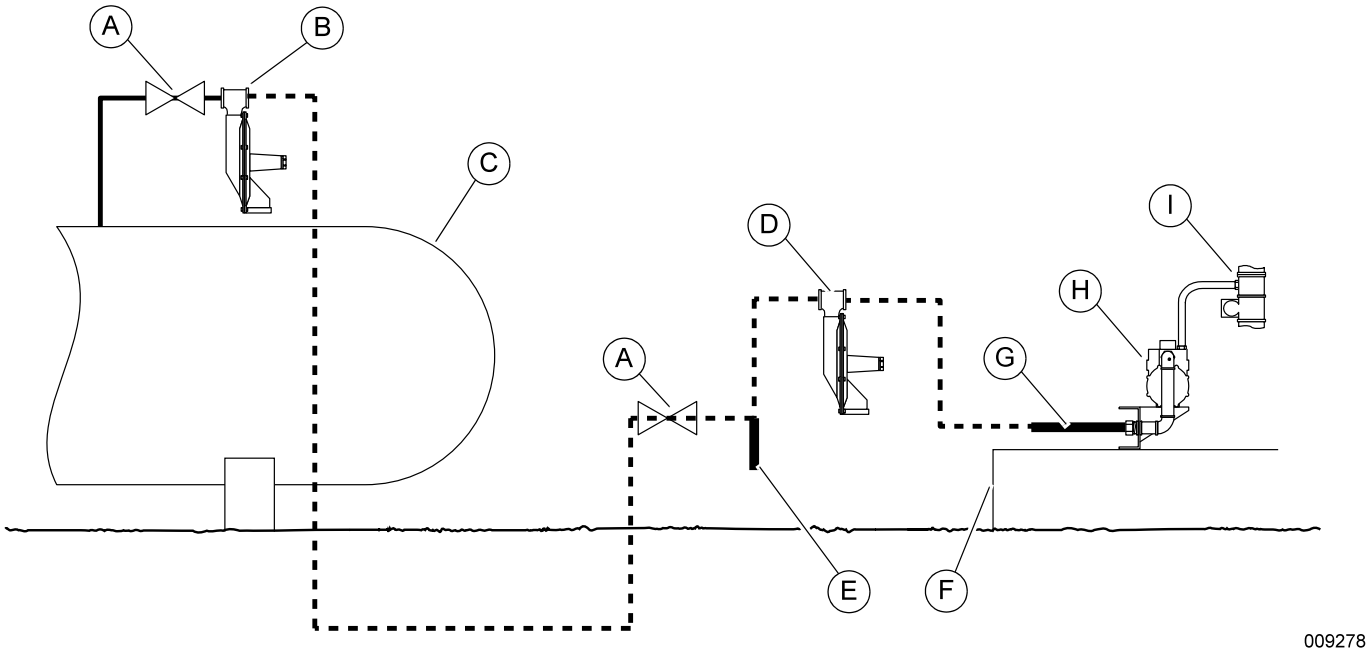

Figure 6-2. Typical LP-Vapor Withdrawal Fuel System

A	Full flow shut off valve	**F**	Generator base
B	First stage regulator with relief valve and pressure tap	**G**	Flexible fuel line
C	Fuel tank	**H**	Unit mounted regulator
D	Second stage regulator	**I**	Mixer
E	Sediment trap		

LPG-Liquid Withdrawal System

This system delivers LPG-Liquid to the connection point on the generator set. For the generator to use the LPG-Liquid fuel, the fuel must be vaporized prior to being delivered to the fuel mixer (carburetor). LPG-Liquid will vaporize at a temperature of -44 °F (-42 °C). The generator set LPG-Liquid fuel system delivery pressure shall have a typical operating range of 58 to 180 psi (400 to 1,242 kPa) (liquid line pressure), depending on the ambient temperature and liquid level in the storage tank.

LPG-Liquid enters the vaporizer and passes into a “flash” chamber. The pressure drop in this chamber vaporizes the liquid tank pressure (max 312 psi (2,152 kPa)) to approximately 11 to 14 in H_2O (2.9 to 3.5 kPa).

Engine coolant is used to heat the flash chamber to increase the temperature and more importantly, to keep it from icing up.

The outlet port of the vaporizer is connected to the Anti-Backfire Solenoid (ABS), if equipped, and then to the Varifuel mixer inlet. The outlet is based on demand and will vary by engine from approximately -1.5 to -7.5 in H_2O (-0.4 to -1.9 kPa).

The piping system connecting the liquid line from the tank connection to the connection on the generator set must be sized to provide the correct volume of liquid propane (gallons per hour) to the generator set as specified in the unit specification sheet.

NOTE: LP tanks set up to provide liquid fuel are equipped with a dip tube connection to provide liquid withdrawal of fuel from the tank.

NOTE: The maximum tank fill capacity is 80% and a minimum of approximately 20% of the tank capacity is needed for fuel expansion from the liquid to vapor state.

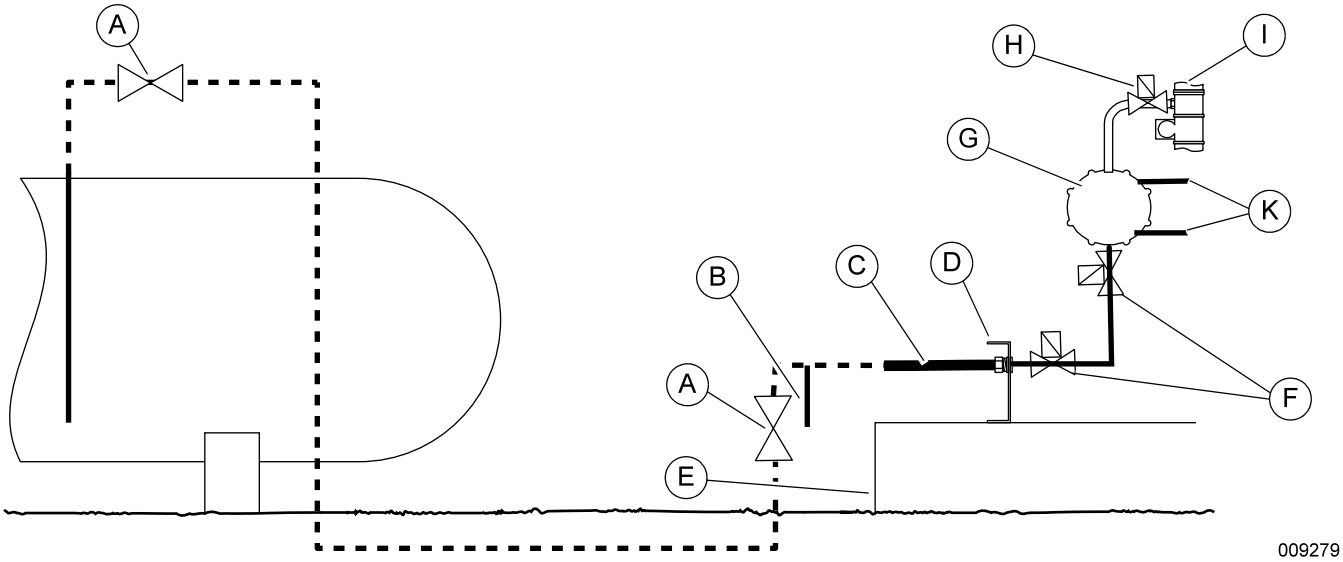

Figure 6-3. Typical LPG-Liquid Withdrawal Fuel System

A	Full flow shut off valve	**G**	Liquid vaporizer regulator
B	Sediment trap	**H**	ABS (Anti-backfire solenoid)
C	Flexible fuel line	**I**	Mixer
D	Generator frame	**J**	Heated coolant connections
E	Generator base	**K**	Coolant lines
F	Unit mounted solenoid stop valve		

Dual Fuel NG-LP System

Some applications use a dual-fuel system where the primary source may not be available during a power outage. Dual-fuel systems use NG as the primary fuel and LP-Vapor or LPG-Liquid withdrawal as the secondary fuel. For dual-fuel units, the specific fuel pressure, volume, and pipe sizing requirements for each fuel type must be observed. See ***Figure 6-4***.

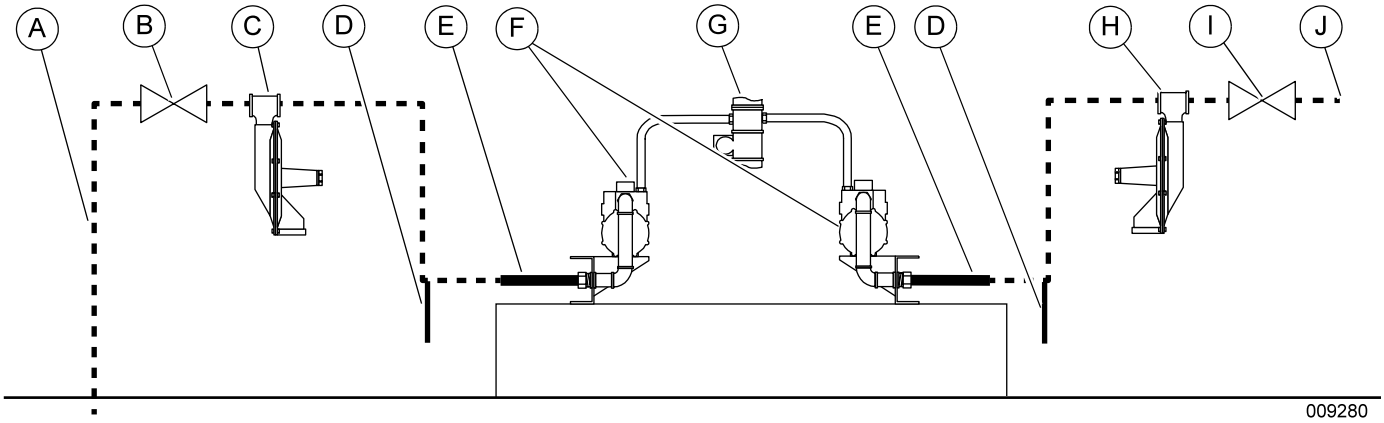

Figure 6-4. Dual-Fuel System

A	Piping from LP tank First stage regulator	**F**	Unit mounted regulators or fuel shutoff valve
B	Full flow shut off valve	**G**	Mixer
C	Second stage regulator	**H**	Primary regulator
D	Sediment trap	**I**	Full flow shut off valve
E	Flexible fuel line	**J**	NG supply

Sediment Trap

Install at least one sediment trap before the unit to separate sediment, debris, and condensation from the gas flow. A sediment trap is also recommended at the bottom of a vertical pipe run and after each change in direction. Sediment traps protect downstream equipment, such as the primary or second stage pressure regulators, from clogging and contamination. Some installations or jurisdictions may require multiple sediment traps. Contact the local authority having jurisdiction for requirements.

Fuel Pressure Regulators

General

One of the most common causes of a generator set not operating properly is improper sizing and installation of the gaseous fuel supply system between the meter (utility source) and the generator connection. The fuel supply system consists of a primary regulator to regulate the flow and volume from the source (utility supply) to the generator, and all of the associated piping, fittings, and shutoff valves, both upstream (feeding the main meter/ regulator) and downstream (between the meter and primary regulator), which connect the fuel source to the connection point on the generator. The fuel supply system must be capable of supplying the correct volume of fuel within the correct pressure range to the connection point on the generator. The volume of fuel and operating pressure required are listed in the technical specifications for the applicable generator. Fuel pressure at the unit mounted regulators must remain within the specified operating range and not drop below the minimum pressure specified.

Definitions

The following definitions are provided for use in this manual.

Table 6-1. Definitions

Term	Description
Allowable Pressure Drop	The design pressure loss in the system under maximum probable flow conditions, from the point of delivery to the inlet connection of the generator set, shall be such that the supply pressure at the generator is greater than or equal to the minimum pressure required by the generator at its full load capacity.
Authority Having Jurisdiction (AHJ) (NFPA-54)	An organization, office, or individual responsible for enforcing the requirements of a code or standard, or for approving equipment, materials, an installation, or a procedure.
Cubic Foot (ft^3) of Gas (NFPA-54)	The amount of gas that would occupy 1 ft^3 when at a temperature of 600 ^oF saturated with water vapor and under a pressure equivalent to 30 in H_2O.
Generator Connection Point	The connection point for the fuel supply system to the generator set is the end of the manufacturer supplied flexible hose fitting which connects to the fitting on the base frame of the generator. An elbow and short nipple have been incorporated to allow the flexible hose to be positioned parallel to the unit base frame. The size of the connection point on the base frame is shown in each unit's installation drawing; the size of the flexible hose (and any elbow and nipple) must be equal to or larger than this connection point. The flexible hose must be installed straight without bending, twisting, or kinking.
psi and psig	Measure of pressure in pounds per square inch and pounds per square inch gauge.
Inches of Water Column (in H_2O)	Measure of pressure in inches of water column. 14 in H_2O = approximately 0.5 psi.
Primary Regulator	A pressure regulator installed between the service regulator (NG) or first-stage regulator (LP-Gas vapor) sized to provide the pressure and volume required by the generator at its full rated load capacity.
Regulator (for LP-Gas vapor)	
First-Stage Regulator	A pressure regulator for LP-Gas vapor service designed to reduce pressure from a container to 10.0 psig or less.
High-Pressure Regulator	A pressure regulator for LP-Gas liquid or vapor service designed to reduce pressure from the container to a lower pressure in excess of 1.0 psig.
Second-Stage Regulator	A pressure regulator for LP-Gas vapor service designed to reduce first-stage regulator outlet pressure to 14 in H_2O or less. For generator set purposes, this is also referred to as the Primary Regulator.
Regulator (for NG fuel)	
Pressure Regulator	Device placed in a gas line for reducing, controlling, and maintaining pressure in downstream piping.
Service Regulator	A pressure regulator installed by the servicing gas supplier to reduce and limit the service line gas pressure to delivery pressure.

Best Practices

These are the manufacturer recommended best practices for configuring and sizing fuel supply piping to generators. These best practices have been developed specifically for the manufacturer's product and may not represent conventional gaseous fuel system sizing methods, particularly those used frequently with low volume appliance installations. Compliance with these best practices will help ensure the engine will operate properly under dynamic conditions.

- The minimum distance from the primary pressure regulator outlet to the generator connection point must not be less than 10 ft (305 cm) of properly sized pipe. Do not connect the pressure regulator directly to the flexible fuel line on the generator. The piping between the primary pressure regulator and the connection point on the generator acts as a mechanical "capacitor" (accumulator) which stores gas and, therefore, can minimize or maximize the changes in delivery pressure the generator sees during cranking and load changes.
- The required fuel pressure to the unit is measured before the fuel shutoff solenoids at the inlet to the unit mounted regulator. A 1/8 in pipe port in the pressure regulator body, or in the piping just before the pressure regulator, is provided for this purpose. See ***Gas Pressure Test Port Location***.
- Seasonal supply pressure changes to the primary pressure regulator can affect the proper operation of the generator. The fuel supply pressure to the unit must remain within the specified operating parameters as stated in the unit specification sheet. Contact the local utility to find out what can be done to correct seasonal changes.
- Use water traps.
- The generator set must have its own dedicated fuel supply. Do not connect any other loads to the outlet of the primary pressure regulator.

For LP-Vapor systems, due to the nature of the conversion process from LP liquid to LP vapor, consider the following:

- The vaporization rate of a given LP tank is dependent on the liquid level in the tank (wetted surface area), the ambient temperature around the tank, and relative humidity.
- When ambient temperatures are below 40 ºF (4 °C), engine fuel consumption is high, and sufficient humidity is present, condensation can occur resulting in frosting of the tank at the liquid level. This condition can lead to a reduced rate of vaporization. See the LP tank sizing section for more information.

Operating Fuel Pressure

The unit specification sheet lists the operating fuel pressure range, as well as the 100% load fuel consumption rate. The pressure range is the minimum and maximum acceptable pressures for proper operation of the unit under all operating conditions. The maximum fuel system pressure drop at each condition, that is, static, cranking, running at no load, and running at full load, is 1 to 2 in H_2O (0.25 to 0.50 kPa) as measured at the primary fuel pressure regulator. For definitions of each condition, see ***Final Test Procedure***.

Engine Fuel Consumption

The volume of gaseous fuel consumed at various loads is listed in the unit specification sheet. Both Natural Gas and LP-Vapor values are provided in Cubic Feet per Hour (cfh). LP-Liquid values are provided in Gallons Per Hour (gph). International units of measure are also provided.

Use the following formulas if it becomes necessary to convert CFH to BTUs per Hour:

- **Natural Gas:** cfh x 1,000 = BTU per hour
- **LP-Vapor:** cfh x 2,500 = BTU per hour

Fuel Pressure Regulator Sizing

Fuel pressure regulators are designed to automatically adjust flow to meet downstream demand at a required pressure. The typical regulator installed as the primary regulator for a generator set is of the direct acting, internally registered design. Direct acting means the pressure sensing element acts directly to open the valve and control the flow to the load while maintaining the desired pressure. The pressure sensing element is typically a diaphragm which is opposed by a combination of spring pressure and atmospheric pressure. The valve is the restricting element and consists of some type of variable restriction (cone, poppet, disc) which closes against a fixed seat. Internal registration means the pressure used for sensing comes from within the valve body, usually through a passage from the secondary side (outlet) to the sensing diaphragm.

The primary regulator must be sized to provide the required flow at the rated pressure to the generator at its full load capacity. The generator fuel consumption values and required operating pressures are listed in the unit specification sheet.

The manufacturer recommends the primary pressure regulator be sized for at least 110% of the generator's required fuel consumption at 100% load, and that the regulator provide no more than a 1 to 2 in H_2O (0.25 to 0.50 kPa) pressure drop at each operating condition, that is, static, cranking, running at no load, and running at full load.

Various regulator manufacturers provide sizing tables, flow capacity, pressure drop tables, and distributors who will help size a regulator correctly to a system.

Recommended Fuel Pressure Regulators

Use only direct acting fuel pressure regulators, such as those made by **Fisher™, Maxitrol®,** or **Norgas™**.

Primary Fuel Pressure Regulator

The following are the recommended "best practices" with regard to specifying, sizing, and installing the primary fuel pressure regulator.

1. Locate the primary fuel pressure regulator no less than 10 ft (305 cm) of pipe length from the generator set connection point.
2. Verify the regulator:
   - Is sized to have a fuel flow delivery rating (cfh) at least 10% greater than the 100% rated kW fuel consumption requirement of the generator.

NOTE: The recommended selection for orifice diameters is to use the smallest orifice that will still provide a cfh fuel flow rate at least 1.1 times greater than the required full load cfh rating of the generator set.

   - Is approved for a mechanized engine application. A standard HVAC type regulator or standard appliance regulator is prohibited.
   - Has an accuracy rating of 1% or less, or has a maximum allowable pressure droop rate of 1 to 2 in H_2O (0.25 to 0.50 kPa).

NOTE: Droop is the reduction of outlet pressure experienced by pressure-reducing regulators as the flow rate increases. It is stated as a percent, in inches of water column, or in pounds per square inch, and indicates the difference between the outlet pressure at low flow rates and the outlet pressure at the published maximum flow rate. Droop is also called offset or proportional band. For proper generator operation, a maximum of 1 to 2 in H_2O (0.25 to 0.50 kPa) droop is required at each operating condition, that is, static, cranking, running at no load, and running at full load.

   - Has a spring rating within the specified range of the generator, typically 7 to 11 in H_2O (1.7 to 2.7 kPa) or 11 to 15 H_2O (2.7 to 3.7 kPa).
3. Verify the generator has a dedicated fuel supply which is not shared with any other appliances (examples: furnace, water heaters, ranges).
4. Check the inlet pressure measured at the regulator body inlet connection when the regulator appears unable to pass the published flow rate. Supply piping up to the regulator can cause significant flowing pressure losses.
5. Verify the regulator is flowing at least five percent of the normal operating flow when adjusting the pressure set point.
6. Expect approximately a one degree drop in gas temperature for every 15 psid (differential) across the regulator due to the natural refrigeration effect.

NOTE: Freezing is often a problem when the ambient temperature is between 30 ºF and 45 ºF (-1 ºC and 7 ºC), particularly with LPV systems.

7. Point vents down to help avoid the accumulation of water condensation or other materials in the spring case.
8. Keep vents open. Do not use long, small diameter vent lines. Use the next nominal pipe size for every 10 ft (305 cm) of vent line, and use 3 ft (91 cm) of vent line for every elbow in the line.
9. The connection point on the generator is the end of the manufacturer supplied flex hose. The flex hose is the same size as the connection point on the generator frame rail (see installation drawings). It is permissible to install one elbow (90º) and a short nipple between the flex hose and frame rail connection point to allow the flex hose to parallel the frame rail for installation purposes.

Pipe Sizing Considerations

General

Contact a local gas distributor or licensed installer when sizing and installing the piping for any gaseous fuel supply system. When using a local gas distributor or installer, verify they have the proper documentation to support their recommendations. The fuel system requirements and best practices conveyed in this manual must be provided to the representative responsible for sizing the fuel system. The final test of the system is measuring the fuel pressure as described in ***Gas Pressure Test Port Location***. If the pressure requirements are not met, then the fuel supply system is not correct.

There are several pipe sizing programs available for use on the Internet and from various manufacturers. If used it is highly recommended that the minimum pressure drop value always be used (0.5 in H_2O (0.12 kPa) or less). This will ensure the piping system is sized correctly to handle the generator set volume at full load, and during cranking and load transients, while also remaining above the minimum operating pressure.

The following general rules apply to piping of gaseous fuel systems:

   - Use black iron piping rigidly mounted and protected against vibration.

- Install the supplied or recommended length of flexible hose between the generator connection point and the rigid supply piping. Install the flexible hose straight without bends, twists or kinks. Do not install the flexible hose underground or in contact with the ground.
- Install a sediment trap.
- Correctly size the piping to maintain the required supply pressure and volume under varying load conditions.
- Properly purge and leak test installed piping.
- Use an approved pipe sealant or joint compound on all threaded fittings to reduce the possibility of leakage.
- Make provision for a fuel shutoff valve near the unit. Verify that the fuel shutoff valve is installed correctly and works properly.

Minimum Recommended Pipe Length

Mount the primary pressure regulator no less than 10 ft (305 cm) of total pipe length from the generator connection point. The volume of piping between the regulator and the load acts as a mechanical “capacitor” which stores gas and will minimize changes in delivery pressure the generator sees during starting and load changes.

Pipe Sizing Practices

Two methods of sizing pipe are provided. One is for short pipe runs with minimal or no bends and is based on the size of the fuel pressure regulator outlet. The second method is for long pipe runs with multiple bends and is based on the actual length of the run and the specific number and type of pipe fittings.

Short Runs with Few or No Bends

Size fuel supply piping so it is at least one pipe size larger than the fuel pressure regulator outlet. For example, if the fuel pressure regulator outlet has a 1-1/2 in diameter, install a minimum 2 in diameter pipe run using suitable adapters. See ***Figure 6-5***.

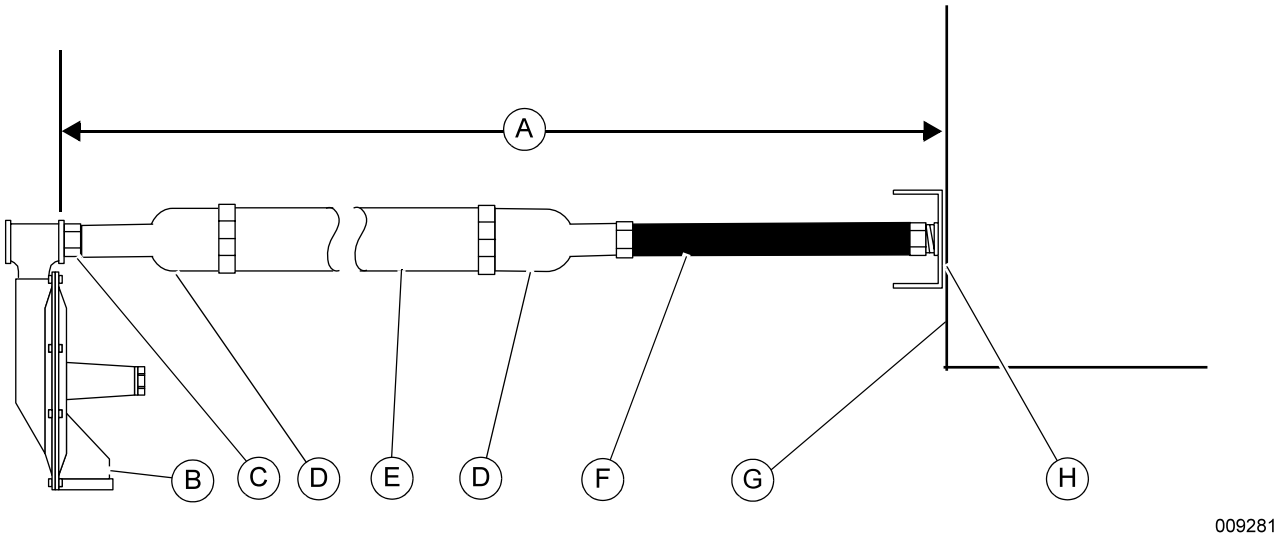

Figure 6-5. Pipe Sizing Based on Regulator Outlet Diameter

A	10 feet minimum	**E**	Pipe diameter one size larger than regular outlet (C)
B	Fuel pressure regulator	**F**	Flexible connection - same diameter as regular outlet (C)
C	Regulator outlet	**G**	Generator
D	Adapter	**H**	Manifold header

Long Runs with Multiple Bends

The Equivalent Pipe Length Method is another way to calculate the required pipe size for a generator installation. The method converts pressure losses inherent in pipe fittings into a length of pipe value, which is then added to the total linear run of estimated pipe length used in the fuel supply system.

The total linear run of pipe length is measured from the primary fuel pressure regulator outlet to the fuel inlet connection point on the generator. The planned system is broken up into straight pipe runs, and the total length of straight pipe determined by adding each straight pipe run section together.

Pipe fittings (elbows, tees, couplings, unions) create a pressure loss due to the inherent resistance coefficient special to each fitting, and must be accounted for separately and individually. Various tables are available which provide the equivalent length of straight pipe for each fitting.

Natural Gas and LP-Vapor Pipe Sizing

To calculate pipe size for a generator set operating on NG or LP-Vapor fuel, proceed as follows:

1. From the unit specification sheet, obtain the fuel consumption rate stated in cubic feet per hour (cfh) when operating the generator set at 100% rated kW. Multiply the cfh value by 1.10 to size the regulator, piping and pipe fittings to 110% of the units full load fuel consumption volume.

NOTE: For LP-Vapor units, the table values are shown in thousands of BTUs per hour. To convert the LP-Vapor fuel consumption from cfh to BTU per hour, multiply the cfh value by 2,500.

2. Verify the primary fuel pressure regulator (or LPV second stage regulator) selected provides the necessary volume of flow at the pressure required (with no more than 1 to 2 in H_2O (0.25 to 0.50 kPa) pressure drop at each operating condition, that is, static, cranking, running at no load, and running at full load).
3. Write down the linear or run distances (in feet of pipe) from the primary fuel pressure regulator outlet to the fuel inlet connection on the generator set.

NOTE: The pipe run distance used to calculate proper sizing is never less than 10 ft (305 cm), which is the minimum acceptable distance between the regulator outlet and the generator connection point.

4. Record the total number and size of all pipe fittings between the primary fuel pressure regulator outlet and the generator fuel inlet connection. Since the equivalent pipe length of fittings is determined by the fitting size, start with a pipe size equal or larger than the fittings on the body of the selected regulator. For example, if the regulator has a fitting size of 1-1/2 in, start with same size pipe and fittings.
5. Convert each pipe fitting into its Equivalent Pipe Length value. For the most common types of fittings, see ***Table 6-4***. Also it is important to note that there is a significant difference in equivalent pipe length between tee fittings when the flow is straight through and tee fittings when the flow is through the branch. For valves, most valve manufacturers provide either CV values or the equivalent pipe length.
6. Add up the equivalent pipe lengths for all the different pipe fittings used.
7. Add the linear or run distances noted in step 3 to the calculated equivalent pipe lengths of all fittings calculated in step 6. This is the Total Calculated Pipe Length for the fuel supply system.
8. Move to ***Figure 6-2***. for NG fuel (specific gravity 0.60) or ***Table 6-3*** for LP-Vapor fuel systems (specific gravity 1.50).
9. From the first column of the appropriate table, locate the Total Calculated Pipe Length that most closely matches the actual length calculated in step 7. Always round up to the next longer pipe length listed in the table (example: if the calculated length is 41 ft (1,250 cm), select a pipe length of 45 ft (1,372 cm) from the table).
10. Move across the table to the selected pipe size and fittings. If the cfh figure equals or exceeds the value calculated in step 1, then the selected pipe size is adequate. If the figure is below the calculated cfh, then go to the next larger size pipe and repeat the calculations starting at step 5.
11. Verify the actual specific gravity of the gas with the supplier, as all calculations performed are based on a specific gravity of 0.60. If the specific gravity of the gas is different, multiply the cfh value calculated in step 1 by the appropriate multiplier listed in ***Table 6-5***. With the revised cfh, return to step 2 to repeat the calculations for sizing the regulator, pipe size and fittings.

NOTE: A properly configured and sized fuel system provides the required fuel volume and pressure for the generator set to operate correctly under all conditions. Verify the maximum fuel system pressure drop at each operating condition, that is, static, cranking, running at no load, and running at full load, does not exceed 1 to 2 in H_2O (0.25 to 0.50 kPa) as measured at the primary fuel pressure regulator. For definitions of each condition, see ***Final Test Procedure***.

Table 6-2. Iron Pipe Sizing for Natural Gas (NG)

Specific Gravity: 0.60 (contact local supplier for specific gravity of local supply)

Inlet Pressure (at beginning of pipe run) less than 1.5 psi (10.3 kPa). For generator applications this will be not greater than the maximum pressure allowed for the unit (typically 14 in H_2O (0.5 psi). See unit specification sheet for correct range.

Nominal Pressure Drop 0.3 in H_2O (0.07 kPa) as Measured at End of Pipe Run

Schedule 40 Pipe Size (in)								
Nominal	**3/4**	**1**	**1-1/4**	**1-1/2**	**2**	**2-1/2**	**3**	**4**
Actual ID	**0.824**	**1.049**	**1.38**	**1.61**	**2.067**	**2.469**	**3.068**	**4.026**
Pipe Length (ft.)	**Flow Capacity in Cubic Feet per Hour**							
10	273	514	1,060	1,580	3,050	4,860	8,580	17,500
15	219	413	848	1,270	2,446	3,899	6,893	14,060
20	188	353	726	1,087	2,094	3,337	5,900	12,034
25	166	313	643	964	1,856	2,958	5,229	10,665
30	151	284	583	873	1,681	2,680	4,738	9,663
35	139	261	536	803	1,547	2,466	4,359	8,890
40	129	243	499	747	1,439	2,294	4,055	8,271
45	121	228	468	701	1,350	2,152	3,805	7,760
50	114	215	442	662	1,280	2,030	3,590	7,330
60	104	195	400	600	1,160	1,840	3,260	6,640
70	95	179	368	552	1,060	1,690	3,000	6,110
80	89	167	343	514	989	1,580	2,790	5,680
90	83	157	322	482	928	1,480	2,610	5,330
100	79	148	304	455	877	1,400	2,470	5,040

This table shows the flow capacity of Natural Gas with a specific gravity of 0.60 in cubic feet per hour through standard schedule 40 pipe at a pressure drop of 0.3 in H_2O (0.07 kPa) from one end of the pipe run to the other. For gases with specific gravity other than 0.60, apply the corresponding multiplier shown in ***Table 6-5***.

Table 6-3. Iron Pipe Sizing for Undiluted LPG Vapor

Specific Gravity: 1.50 (contact local supplier for Specific Gravity of local supply)

Inlet Pressure less than 11 in H_2O (2.7 kPa) For generator applications this will be not greater than the maximum pressure allowed for the unit (typically 14 in H_2O (3.5 kPa) See unit specification sheet for correct range.

Nominal Pressure Drop 0.5 in H_2O (0.12 kPa) as Measured at End of Pipe Run

Intended use for piping between Second-Stage regulator and generator connection point

Schedule 40 Pipe Size (in)								
Nominal	**3/4**	**1**	**1-1/4**	**1-1/2**	**2**	**2-1/2**	**3**	**4**
Actual ID	**0.824**	**1.049**	**1.38**	**1.61**	**2.067**	**2.469**	**3.068**	**4.026**
Pipe Length (ft.)	**Flow Capacity in Thousands of Btu per Hour**							
10	608	1,150	2,350	3,520	67,900	10,800	19,100	39,000
20	418	787	1,620	2,420	4,660	7,430	13,100	26,800
30	336	632	1,300	1,940	3,750	5,970	10,600	21,500
40	287	541	1,110	1,660	3,210	5,110	9,030	18,400
50	255	480	985	1,480	2,840	4,550	8,000	16,300

This table shows the flow capacity, in thousands of Btu per hour, of undiluted LP-Gas vapor, with a specific gravity of 1.50, through standard schedule 40 pipe with an inlet pressure of 11 in H_2O (2.7 kPa) at a nominal pressure drop from one end to the other of 0.5 in H_2O (0.12 kPa) For pipe length and diameters or flow rates not shown, contact a local gas supplier or installer.

The values in the table are in thousands of BTU/hr, so multiply the values shown by 1,000 to get the actual value.

To convert cubic feet per hour (cfh) to BTU/hr, multiply by a factor of 2,500.

To convert BTU per hour to cubic feet per hour (cfh), divide by a factor of 2,500.

Table 6-4. Standard Screw Fittings

Pipe Size (in)	I.D. (in)	90° Elbow	45° Elbow	90° Tee, Flow Through Run	90° Tee, Flow Through Branch
3/4	0.824	2.1	0.97	1.4	4.1
1	1.049	2.6	1.23	1.8	5.3
1-1/4	1.380	3.5	1.6	2.3	6.9
1-1/2	1.610	4.0	1.9	2.7	8.0
2	2.067	5.2	2.4	3.5	10.4
2-1/2	2.469	6.2	2.9	4.1	12.4
3	3.068	7.7	3.6	5.1	15.3
4	4.026	10.1	5.4	6.7	20.1
6	6.065	15.2	8.1	10.1	30.3

This table shows the typical equivalent length in feet of pipe for standard screwed fittings used with schedule 40 pipe. For fittings other than those shown, contact a local gas supplier or installer.

Table 6-5. Specific Gravity Multipliers

Specific Gravity (1)	Multiplier	Specific Gravity (1)	Multiplier
0.35	1.31	1.00	0.78
0.40	1.23	1.10	0.74
0.45	1.16	1.20	0.71
0.50	1.10	1.30	0.68
0.55	1.04	1.40	0.66
0.60 Natural Gas (Typical)	1.00	1.50 LP-Vapor (Typical)	0.63
0.65	0.96	1.60	0.61
0.70	0.93	1.70	0.59
0.75	0.90	1.80	0.58
0.80	0.87	1.90	0.56
0.85	0.84	2.00	0.55
0.90	0.82	2.10	0.54

This table shows the multipliers for gases with a specific gravity different from that used in ***Table 6-2*** and ***Table 6-3***. To use the table, obtain the specific gravity (SG) of the gas used from the gas supplier. Find the SG value in the table, and use the multiplier provided in the next column. Apply the multiplier to the flow rate for the pipe size and length found in either ***Table 6-2*** (Natural Gas flow rates in cfh) or ***Table 6-3*** (LP-Vapor flow rates in thousand of BTU/hr).

LP-Liquid Pipe Sizing

Sizing pipe for LP-Liquid withdrawal is slightly simpler than for vapor withdrawal. The liquid will be supplied from the source (tank) at a pressure usually between 50 and 180 psi (345 and 1,241 kPa). The size of the connection point on the generator base frame is shown in the installation drawing for the unit.

To calculate the pipe size needed for a specific generator set operating on either LP-Liquid fuel, use the following process:

1. Obtain the gallon per hour (gph) fuel consumption rating of the generator set when operating at 100% rated kW from the unit specification sheet.
2. Measure the total pipe run distance from the source tank to the connection point on the generator set. The connection between the rigid supply pipe and the generator must be made through a suitable flexible hose.
3. Using ***Table 6-4***, list any fittings and their equivalent pipe length. Add up the total equivalent pipe length for all fittings in the system. It is recommended to start with the pipe size of the connection on the generator set.
4. Add the total pipe run and the total equivalent length of pipe fittings together. This is the total calculated pipe length of the supply line.
5. Using ***Table 6-6***, locate the gas flow required for the unit (volume at 100% load) in the left hand column. Column 1 provides flow rates in cfh, and Column 2 provides flow rates in gph. Move across the table row until you come to a pipe length value greater than the calculated pipe distance found in Step 4.
6. If the value found in the table is greater than the calculated pipe length, move up the column to find the appropriate size pipe. If the recommended pipe size differs from the size used to estimate the equivalent length of the fittings used, recalculate the total pipe length using the new recommended size pipe.

Table 6-6. LP-Liquid Pipe Sizing

Liquid Gas Flow (cfh)	Liquid Gas Flow (gph)	Maximum Pipe Length in Feet (Standard sch 40 Pipe)			
		1/4 in	3/8 in	1/2 in	3/4 in
360	10	729			
540	15	324			
720	20	182	825		
1,440	40	46	205	745	
2,160	60	20	92	331	
2,880	80	11	51	187	735
3,600	100	7	33	119	470

Sizing LP Tanks for Vapor Withdrawal

The manufacturer recommends the installer contact a reputable LP supplier when sizing LP storage tanks and their associated pressure regulators and piping systems. Many factors come into play when working with LP in either its vapor or liquid form.

The operation of an LP-Vapor system depends on the vaporization of the liquid stored in the tanks. As the vapor above the liquid level is withdrawn the pressure in the tank decreases. This change in pressure causes the liquid to “boil” to restore the pressure equilibrium. The liquid in the tank uses the temperature difference between its boiling point (-44 ºF (-42 °C) for Propane and 15 ºF (-9 °C) for Butane) and the outside temperature to extract enough heat to enable vaporization (boiling). Only the liquid in contact with the tank wall absorbs heat from the outside. The area of the tank where the liquid is in contact with the tank wall is referred to as the “wetted surface area”. Cold weather results in a reduced tank vaporization capacity because there is less heat energy available to boil off the liquid into vapor. The wetted surface area of the tank must be large enough to sustain the vaporization rate required by the generator. Depending on the relative humidity and the ambient temperature, frosting can occur on the outside of the tank when it is in use. This condition further inhibits the heat transfer required to sustain vaporization.

Several factors affect the rate of vaporization for LP tanks:

- The size of the tank (wetted surface area). As the wetted surface area decreases the rate of vaporization decreases.
- The lowest liquid level the tank will be allowed to reach (relates directly to the wetted surface area). The typical maximum fill level for LP tanks is 80%, and the lowest recommended operating level is 20%. This provides a volume equivalent to 60% of the tank capacity to be used to calculate run time. Most tank sizing tables provide the vaporization rate of the tank at the lowest allowable level (20%); any tank level above this point will have a higher vaporization rate.
- The lowest normal temperature expected. Typical tank tables provide vaporization rates at 40 ºF (4 °C), 20 ºF (-7 °C), and 0 ºF (-18 °C). For temperatures below 0 ºF (-18 °C) contact a reputable LP dealer for options.
- The mean relative humidity.

NOTE: The installed low pressure fuel system must comply with ***Gas Pressure Test Port Location***. The final test of the system (***Final Operating Test***) is the final approval of any system installed. If the requirements are not met for full load volume at no less than the minimum required pressure, the unit will not pass.

To size an LP tank for a desired run time the following information is required:

- The maximum vapor consumption of the generator (in BTU/hr) at 100% load. The specification sheet for the generator will list the fuel consumption rate, usually in cubic feet per hour. To convert cfh to BTU/hr, multiply by 2,500.
- The fuel consumption rate in gallons per hour with the generator at 100% load. To convert cfh (propane vapor) to gph, divide by 36.38. To convert BTU/hr to gph, divide by 91,502.
- The desired run time.
- The minimum operating temperature expected.

The most important thing to consider when sizing LP tanks for vapor withdrawal is the vaporization rate of the tank at the minimum temperature expected, and at the

minimum fuel level the tank will be allowed to reach. The vaporization rates shown in ***Table 6-7*** are based on the tank at 20% of its fill capacity.

1. Multiply the gallons per hour fuel consumption rate of the generator at 100% load by the longest run time expected/desired.
2. Determine the fuel consumption in BTU/hr with the generator at 100% load.
3. Determine the lowest expected operating temperature.
4. See ***Table 6-7***. Using both the Minimum Operating Temperature and the Tank Vaporization Capacity columns, find the BTU/hr vaporization rate of the generator at 100% load that corresponds to the lowest expected operating temperature.
5. Look back at column 2, note the Available Tank Capacity. If it is greater than the total run time fuel consumption refer back to column 1. This is the correct size tank required. If it is less than the total run time fuel consumption, then go to the next larger tank size. Recheck the lowest operating temperature and the tank vaporization capacity.

Table 6-7. Vaporization Rates

Tank Capacity Total (gal) See Note 1	Available Tank Capacity (gal) See Note 2	Minimum Operating Temperature (°F)	Tank Vaporization Capacity (BTU/hr) See Note 3	Length (in)	Diameter (in)
250	150	40 20 0	507,600 338,400 169,200	94	30
325	195	40 20 0	642,600 428,400 214,200	119	30
500	300	40 20 0	792,540 528,360 264,180	119	37
850	510	40 20 0	1,217,700 811,800 405,900	165	41
1000	600	40 20 0	1,416,960 944,640 472,620	192	41

Note 1: The minimum LP tank size is 250 gallons (946 liters), unless unit calculations dictate use of a larger tank. Vertical tanks, which are measured in pounds, will not usually meet the minimum tank size (250 Gallons x 4.20 Pounds = approximately a 1,050 pound vertical tank minimum).

Note 2: The available tank capacity is approximately 60% of the total fill capacity. This is based on a maximum fill level of 80% and a minimum operating level of 20% (80%-20% = 60%).

Note 3: The vaporization capacity shown is based on a tank level of 20%. This represents the smallest allowable wetted surface area of the liquid in the tank. As the liquid level goes up, the wetted surface area and the vaporization rate increases.

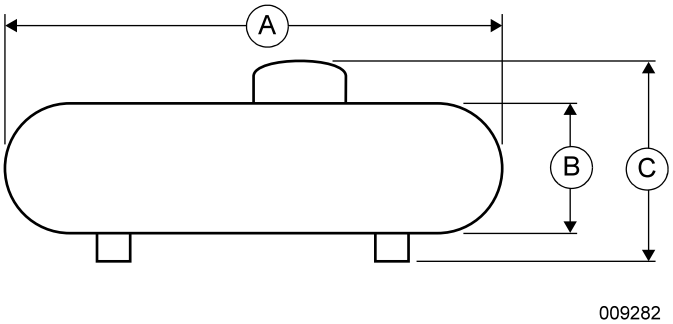

Figure 6-6. Typical Propane Tank Dimensions

A	Length
B	Diameter
C	Height

NOTE: The minimum LP tank size is 250 gallons (946 liters), unless unit calculations dictate use of a larger tank. Vertical tanks, which are measured in pounds, will not usually meet the minimum tank size (250 Gallons x 4.20 Pounds = approximately a 1,050 pound vertical tank minimum).

Propane conversion figures:

- 36.38 ft^3 = 90,500 Btu = 1 gal
- 1 lb = 21,500 Btu = 8.56 ft^3
- 2,500 Btu = 1 ft^3

Final Operating Test

A properly configured and sized fuel system provides the fuel volume and fuel pressure required for the generator set to operate correctly in all modes of operation. To confirm proper fuel system operation, a series of tests must be performed as further described below.

Gas Pressure Test Port Location

Using a suitable pressure gauge or water manometer, measure the gas pressure to the generator at a test port located before the fuel solenoid shutoff valve(s).

See ***Figure 6-7***. On units using the demand type regulator(s), there may be a factory installed 1/8 in pipe port in a tee fitting connected to the low pressure switch.

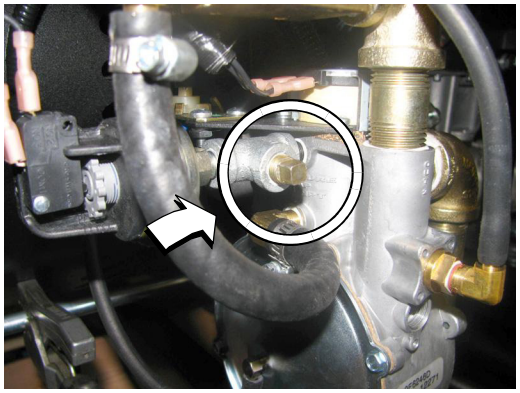

Figure 6-7. 1/8 in Pipe Port Location

See ***Figure 6-8***. If the unit has a low pressure switch without the tee, install a tee and plug between the low pressure switch and the test port on the regulator body using a suitable pipe dope. Use only the upper port on the regulator body, as it detects supply gas pressure even when the unit solenoid valve is closed. This allows static pressure to be measured, as well as pressure when cranking, while running at no load, and while running at full load.

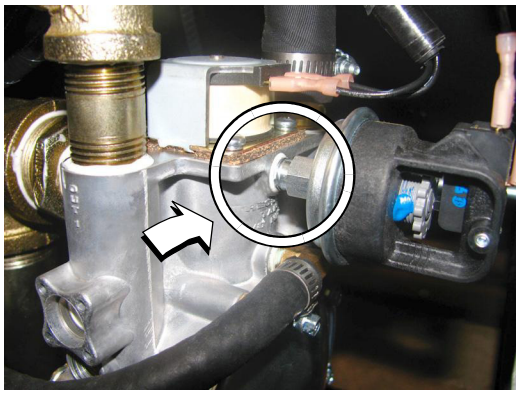

Figure 6-8. Tee and Plug Location

See ***Figure 6-9***. On 150 kW and larger units using the dual fuel shutoff solenoids, the low pressure switch is located in the piping as shown. Remove the switch and install an appropriately sized tee and plug between it and the fuel line.

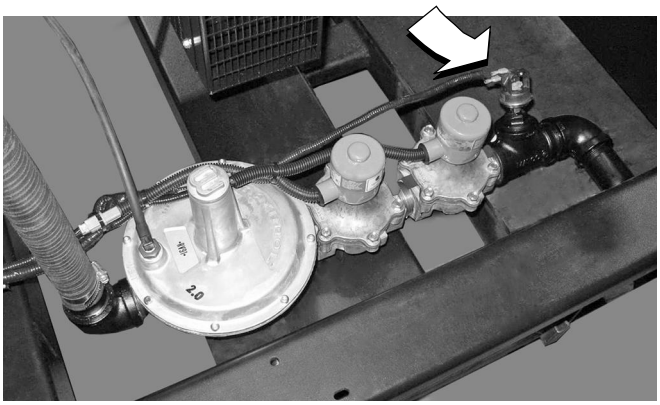

009285

Figure 6-9. Low Pressure Switch Location

Factory installed at the test point, some units may be equipped with a special test port plug known as a “Pete’s Plug.” (***Figure 6-10***). The plug allows fuel pressure test readings to be taken quickly without leaving costly gauges installed in the line.

NOTE: Gauge plug is 1/4 in NPT, part no. 0K2340.

Use the “Pete’s Plug” as follows:

1. Clean and lubricate gauge adapter probe with a small amount of petroleum jelly or silicone grease.
2. Assemble gauge adapter (***Figure 6-11***).

NOTE: Gauge adapter is a 1/8 in diameter probe, part no. 0K2341.

3. Using the appropriate sealant, screw barbed fitting into gauge adapter.
4. Install fuel hose of the proper pressure gauge onto barbed fitting.
5. Slowly unscrew protective cap from the test port plug.

NOTE: Quickly tighten the cap if escaping gas or liquid is heard or felt. Replace the plug if defective.

6. Insert gauge adapter into test port plug and secure.

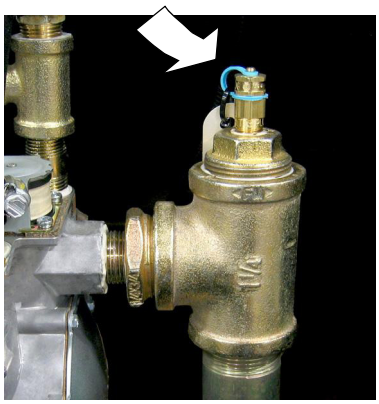

009286

Figure 6-10. Pete’s Plug Location

009287

Figure 6-11. Gauge Adapter

7. Once the fuel pressure reading is obtained, remove gauge adapter probe and screw protective cap onto fuel pressure test port plug.

NOTE: Take necessary readings as quickly as possible. Severe deformation of the valves may occur if gauge adapter probe is left in the test port plug for a period of hours or days.

NOTE: Below 45 ºF (7 °C). the neoprene core of the plug does not recover it's original shape as rapidly as it would at higher temperatures. Therefore, upon removal of the gauge adapter probe, the valves may not close fully and immediately, or they may remain slightly open until the operating temperature is above 45 ºF (7 °C). Lower pressures and the length of time the gauge adapter probe is inserted also can affect the valve closing rate. The protective cap is provided to eliminate the small amount of leakage that might occur following removal of the gauge adapter probe.

8. Tighten protective cap to prevent tampering.

Final Test Procedure

The following test must be performed at startup to document and validate fuel system operation. It requires a load bank connected to the unit, or a combination of load bank and system load, to bring the unit to its full rated kW load capacity.

Measure the fuel supply pressure under each of the following conditions:

1. **Static Pressure.** Pressure when the unit is not running. Must not exceed the maximum pressure listed in the unit specification sheet.
2. **Cranking Pressure.** Pressure when the unit is cranking. Must not drop more than 1 in H_2O (0.25 kPa) below Static Pressure or below the minimum pressure listed in the unit specification sheet. If it does, it may indicate that fuel supply piping is not correctly sized, or that primary regulator is improperly sized or mounted too close to the generator connection point. The unit may experience hard starting, or will not perform as expected at full load or during load transients.
3. **Running- No Load Pressure.** Pressure when the unit is running at rated frequency and voltage with no load. Should be at or slightly below the maximum pressure as listed in the unit specification sheet.
4. **Running- Full Load Pressure.** Pressure when the unit is running with full rated load applied (**kW**). Pressure must **NEVER** drop below the minimum pressure listed in the unit specification sheet.

Section 7: Diesel Fuel Systems

General Information

WARNING

Personal Injury. Fuel lines are pressurized. Servicing the fuel lines may release high pressure fuel and could result in death or serious injury. (000501)

Since diesel fuels are less volatile than gasoline or gaseous fuels, they are sometimes considered safer. Due to this perception, careless installation practices can occur, which may lead to serious problems with generator set performance and reliability.

Periodically inspect and test the system to verify all components remain in good working order.

Diesel Fuel Base Tank

Units provided are typically mounted on their own base or fuel tank. See ***Figure 7-1***. These are plumbed at the factory. The base tank is the main fuel tank and incorporates the following items:

- Fill Line – some are equipped with overflow containment.
- Vent Line – some applications require extending the vent line outside of an enclosure or to outside air along with adequate spill containment.
- Fuel supply line to engine pump with in-line check valve.
- Fuel return line from engine, sometimes supplied with a check valve.
- Fuel level indication (electrical, mechanical, or both).
- Single wall or double wall construction with rupture basin and level indicator switch.
- Emergency vent on main tank and rupture basin, if equipped.

Diesel Fuel Recommendations

Use **No. 1D** diesel fuel when temperatures are below freezing. Use **No. 2D** diesel fuel when temperatures are above freezing. In the United States, diesel fuel must also meet the requirements described below.

Beginning October 1, 2010, diesel fuel used by owners and operators must meet:

1. Sulfur content of 15 parts per million (ppm) maximum.
2. Minimum cetane index of 40 or a maximum aromatic content of 35 volume percent.

IMPORTANT NOTE: Allow at least five percent of the tank capacity for fuel expansion. Do not overfill.

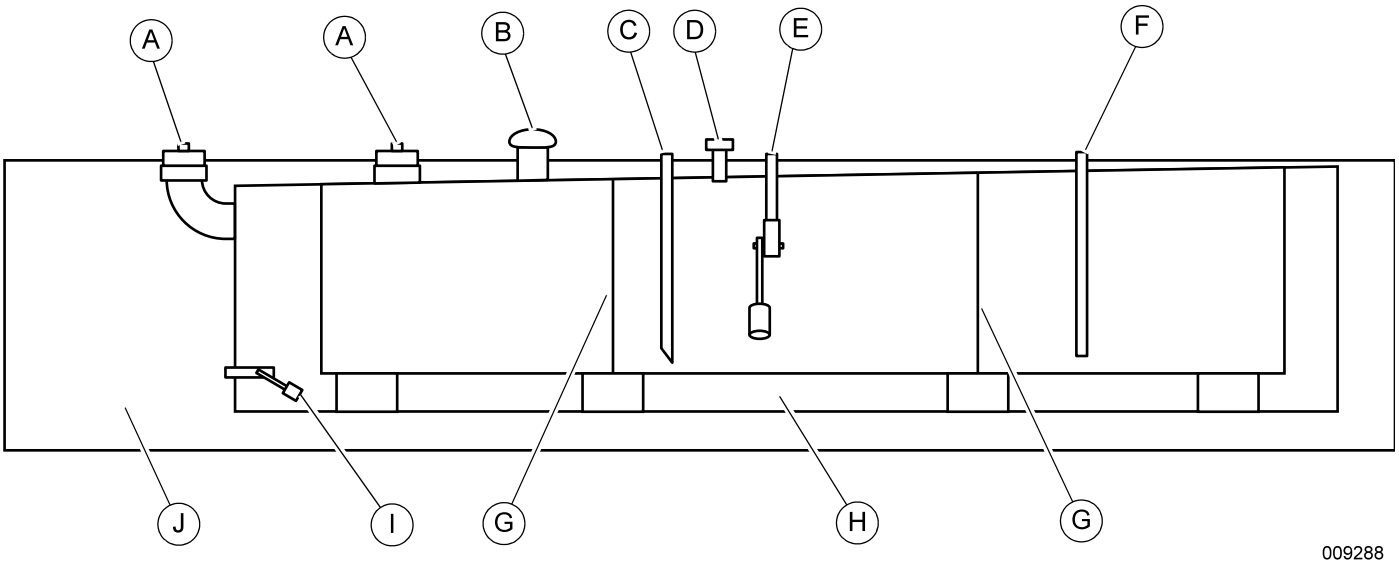

Figure 7-1. Typical Diesel Fuel Base Tank

A	Emergency vent	**F**	Fuel supply
B	Vent	**G**	Baffle
C	Fuel return	**H**	Leak containment area
D	Fuel fill	**I**	Rupture basin leak detector
E	Fuel level sensor	**J**	Stub up area

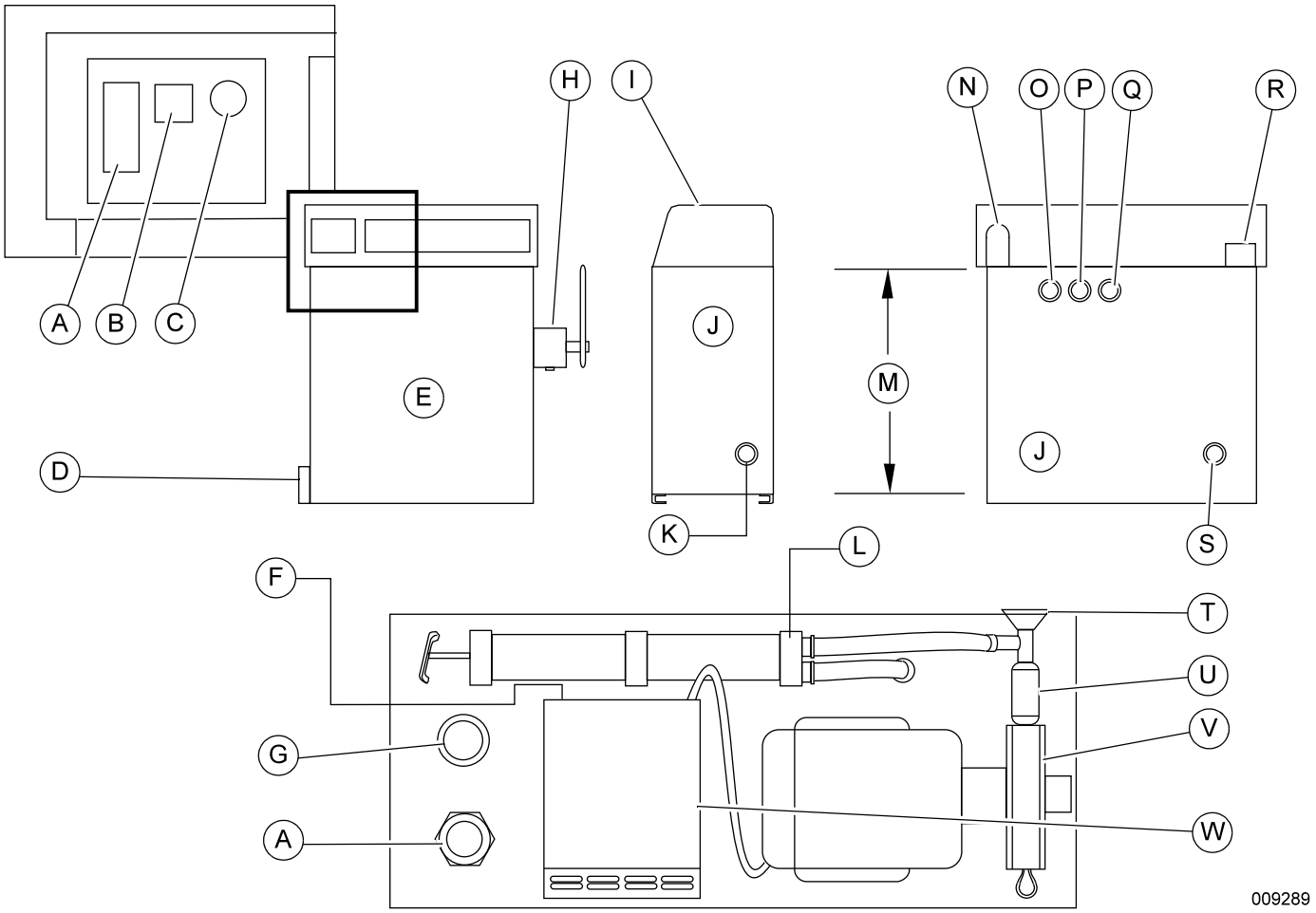

Figure 7-2. Typical Day Tank

A	Fuel level gauge	**M**	Usable fuel
B	“Push to test”	**N**	Fuel supply to pump
C	Pump running lamp	**O**	Vent
D	Drain	**P**	Overflow
E	Front view of unit	**Q**	Fuel return
F	Electric in	**R**	Opening for electrical connections
G	Optional fill cap	**S**	Alternate fuel return
H	Optional hand pump	**T**	Fuel in
I	Removable cover	**U**	Optional inlet check valve
J	Right end view	**V**	Pump
K	Engine fuel supply	**W**	Electric control module
L	Optional hand pump		

Day Tanks

A day tank is a diesel fuel tank located inside a structure that supplies fuel to the generator set. Day tanks typically incorporate fuel transfer pumps and controls to replenish their fuel supply from an even larger fuel supply tank. Day tanks incorporate the same features found in a typical base tank, such as fuel fill, fuel vent, supply, and return connections, safety vent, double wall for fuel containment, fuel level gauge, and water drain. See *Figure 7-2*.

- Mount day tanks so their fuel level is lower than the engine fuel injectors. The vertical lift between the day tank and the engine must not exceed 40 in (102 cm). Avoid excessive pipe run between the day tank and engine connection points. Pipe run that is too long can provide too much resistance causing poor operation or premature failure of the engine mounted fuel pump, in addition to problems with the engine starting, running, and carrying load.
- The size of the connection points on the base rail of the unit are given in the NOTES section of the unit installation drawing. To prevent leaks or breakage caused by vibration, shifting or settling, install a flexible length of APPROVED fuel line between the base rail connection point and the rigid supply piping.
- Numerous guidelines apply to open set generators installed inside buildings or other structures. Foremost is fire safety. The following are some general guidelines that apply to diesel fuel supply requirements for indoor applications or applications with units that do not use a base tank.
- Use black iron or steel piping for lines from the fuel source to the base connections. Do not use galvanized pipe for diesel fuel applications.
- Avoid cast iron and aluminum fittings and pipe as they are porous and can leak.
- Install a flexible length of fuel line between the rigid fuel supply piping and the generator fuel connection.
- The best location for diesel fuel supply tanks is at the same level as the engine fuel pump, but lower than the fuel injectors. If the fuel supply level is higher than the fuel injectors, it could allow leakage through the nozzles into the cylinders causing hydraulic lock and other engine damage.
- Vertical lift between the engine fuel pump and the fuel level in the tank should not exceed 40 in (102 cm). If vertical lift is greater, or the supply piping run is too long, an auxiliary pump or a day tank may be necessary.
- Locate fuel filters and drains in easily accessible areas to promote regular and frequent service. Cleanliness of the fuel is critical for diesel engines, which have precision fuel injectors and pumps that are easily clogged or damaged.

Other Options and Considerations

Most diesel engines today incorporate primary and secondary fuel filters designed to protect the engine fuel system components from contamination. In addition to the built-in fuel filters or separators, secondary filter systems are available to provide added functionality: water and fuel separators, fuel heaters and coolers, and additional fine filtration capacity.

Always prime engines before starting. Once started, run at no load long enough to ensure air is evacuated from the fuel lines and that fuel filters are full.

Section 8: Electrical System

General Information

All wiring must be properly routed, supported, and connected. Wiring must also be properly sized to carry the maximum load current to which it will be subjected.

Panels are provided to separate the high and low voltage wiring connections. These two panels are clearly labeled. The wiring diagrams for each specific unit show the connection points in their corresponding sections. Terminal boards are clearly labeled and correspond to the same terminal connections shown in the wiring diagrams. Always use the unit specific wiring diagrams when making wiring connections.

Wiring Installation-Connection Safety

It is highly recommended that the installer review the safety rules at the beginning of this manual for specific dangers, cautions, and hazards associated with the installation of any industrial product.

When installing the generator set and connecting any of the wiring it is important to keep the generator and system de-energized and disabled. Disable the generator by placing the AUTO/OFF/MANUAL switch in the OFF position, de-energize the battery charger, and disconnect the negative lead from the negative battery terminal. Verify the 120/240, 120/208 auxiliary power circuit to the unit is de-energized.

Verify wires are de-energized (using appropriate safety gear and a meter) before handling.

General Wiring Requirements

The following are some general wiring requirements to be considered during the installation.

- Load Wiring - Properly size and select wiring.
- Accessory Power Wiring - Size and select wiring using the appropriate tables in the NEC and per the connection requirements in the individual control panel wiring diagram.
- Control Wiring - Typically low DC voltage wiring (12-24 VDC) that includes the 2-wire start and signal wiring (ATS Position, backup wiring for MPS), spare output customer wiring to the auxiliary relay board, power for remote annunciators, and backup power to the System Controller (MPS). Use multi-strand wire appropriately sized for the length of run. Do not exceed #14 AWG when connecting to the customer connection terminals.
- Communication Wiring - For RS-485 communications to remote annunciators (RAP), HUIO, HTS and MTS transfer switches, and between MPS generators and the System Controller. Use shielded wire sized for the length of run. See the wiring recommendations in the applicable annunciator and controller owner's manuals.
- Correctly tighten all terminals using the torque specifications on the unit wiring diagram or on the labels inside the control panel.

High Voltage Customer Connections

The high voltage customer connection panel contains the terminals to connect all of the high voltage wiring, greater than 30 VAC/60 VDC, between the unit and the customer load and service panels. It contains connection points for the following items:

- MLCB - E1, E2, E3, and Neutral for customer load wiring.
- TB4 -120/240 VAC terminals for accessory power. This power should come from a customer utility supply source (with appropriate sized breaker) which is also powered by emergency power during an outage. This power is for the unit battery charger as well as any of several optional items shown in the Common Options block of the wiring diagram. Read the notes regarding the maximum wire size and tightening torque for the field wiring to the customer connection terminal strip (TB4).
- 120/240 or 120/208 VAC Optional Load Center. Provides circuit protected power for various options including Coolant Heaters, Oil Heaters, Battery Charger, Alternator Heaters, and Enclosure Lighting.
- Optional GFCI and 240 VAC receptacles. Provides a place to plug in optional coolant heater, battery warmers, and oil heaters.
- Optional Run Relay and its related terminal connections (TB5).

Table 8-1. Field Wiring

Breaker Frame	Circuit Breaker Range (A)	Wire Type	Wire Temperature Rating	Circuit Breaker Lug AWG Wire Range/(Number of Conductors)	Torque to Wire
Series G - JG Frame	20 - 250	Cu	167 ºF (75 ºC)	4-350 kcmil (1)	180 **in-lb** (20.3 Nm)
Series G - LG Frame	160 - 600	Cu/Al	167 ºF (75 ºC)	2-500 kcmil (2)	375 **in-lb** (42.4 Nm)
Series C - F Frame	15 - 100	Cu/Al	167 ºF (75 ºC)	14-1/0 (1)	(#14-10) 35 **in-lb** (4 Nm)
					(#8) 40 **in-lb** (4.5 Nm)
					(#6-4) 45 **in-lb** (5.1 Nm)
					(#3-1/0) 50 **in-lb** (5.6 Nm)
	60 - 200	Cu/Al		4-4/0 (1)	120 **in-lb** (13.6 Nm)
	100 - 225	Cu/Al		6-300 kcmil (1)	120 **in-lb** (13.6 Nm)
Series C - J Frame	250	Cu	167 ºF (75 ºC)	4-350 kcmil (1)	275 **in-lb** (13.1 Nm)
Series C - K Frame	225	Cu/Al	167 ºF (75 ºC)	3-350 kcmil (1)	275 **in-lb** (13.1 Nm)
	300	Cu/Al		250-500 kcmil (1)	375 **in-lb** (42.4 Nm)
	350 - 400	Cu/Al		3/0-250 kcmil (2)	275 **in-lb** (13.1 Nm)
Series C - L Frame	450 - 500	Cu/Al	167 ºF (75 ºC)	3/0-350 kcmil (2)	275 **in-lb** (13.1 Nm)
	600	Cu/Al		400-550 kcmil (2)	275 **in-lb** (13.1 Nm)
Series C - M Frame	700 - 800	Cu/Al	167 ºF (75 ºC)	3/0-400 kcmil (3)	375 **in-lb** (42.4 Nm)
Series C - N Frame	900 - 1,000	Cu/Al	167 ºF (75 ºC)	4/0-500 kcmil (4)	375 **in-lb** (42.4 Nm)
	1,200	Cu/Al		500-750 kcmil (3)	450 **in-lb** (50.8 Nm)
Series C - R Frame	1,400 - 1,600	Cu/Al	167 ºF (75 ºC)	500-1000 kcmil (4)	550 **in-lb** (62.1 Nm)

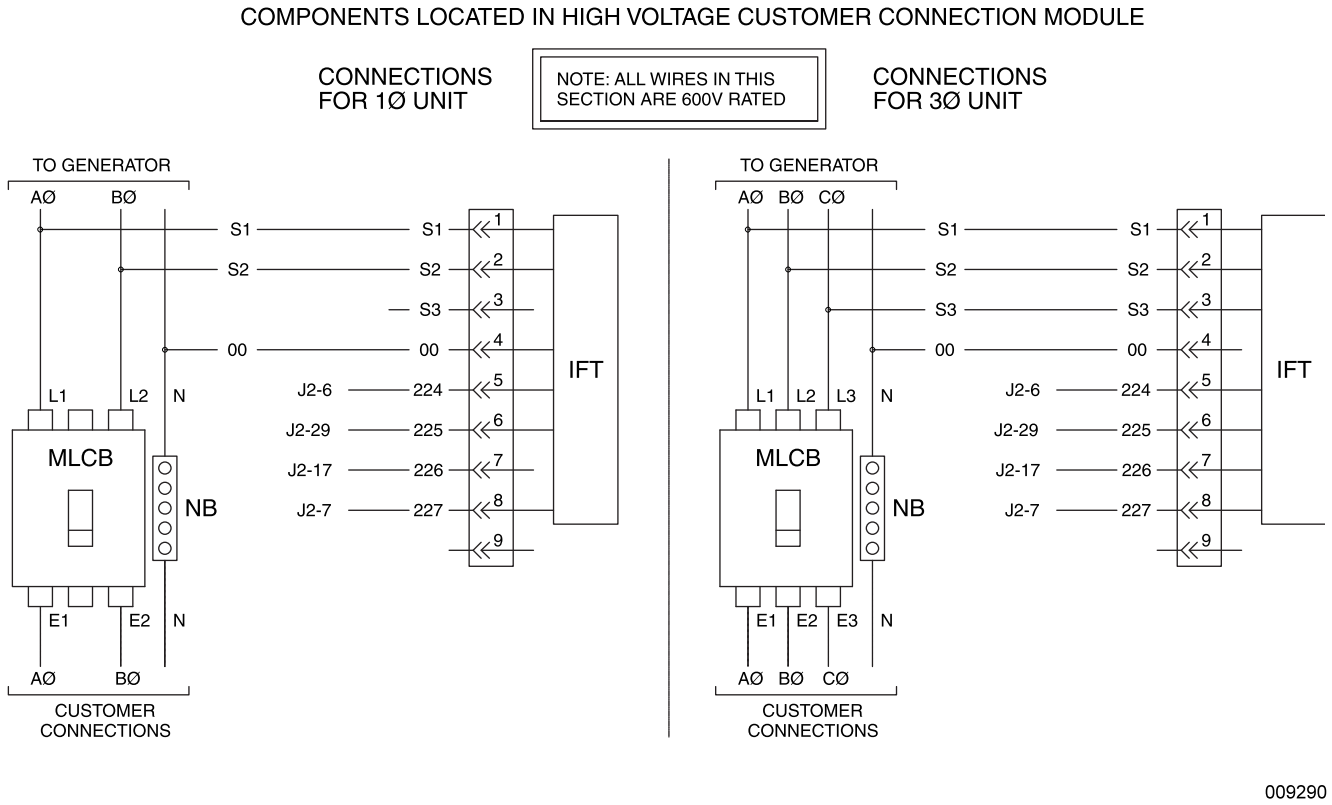

Figure 8-1. Typical Industrial Diagram Showing Load Lead Connections to MLCB

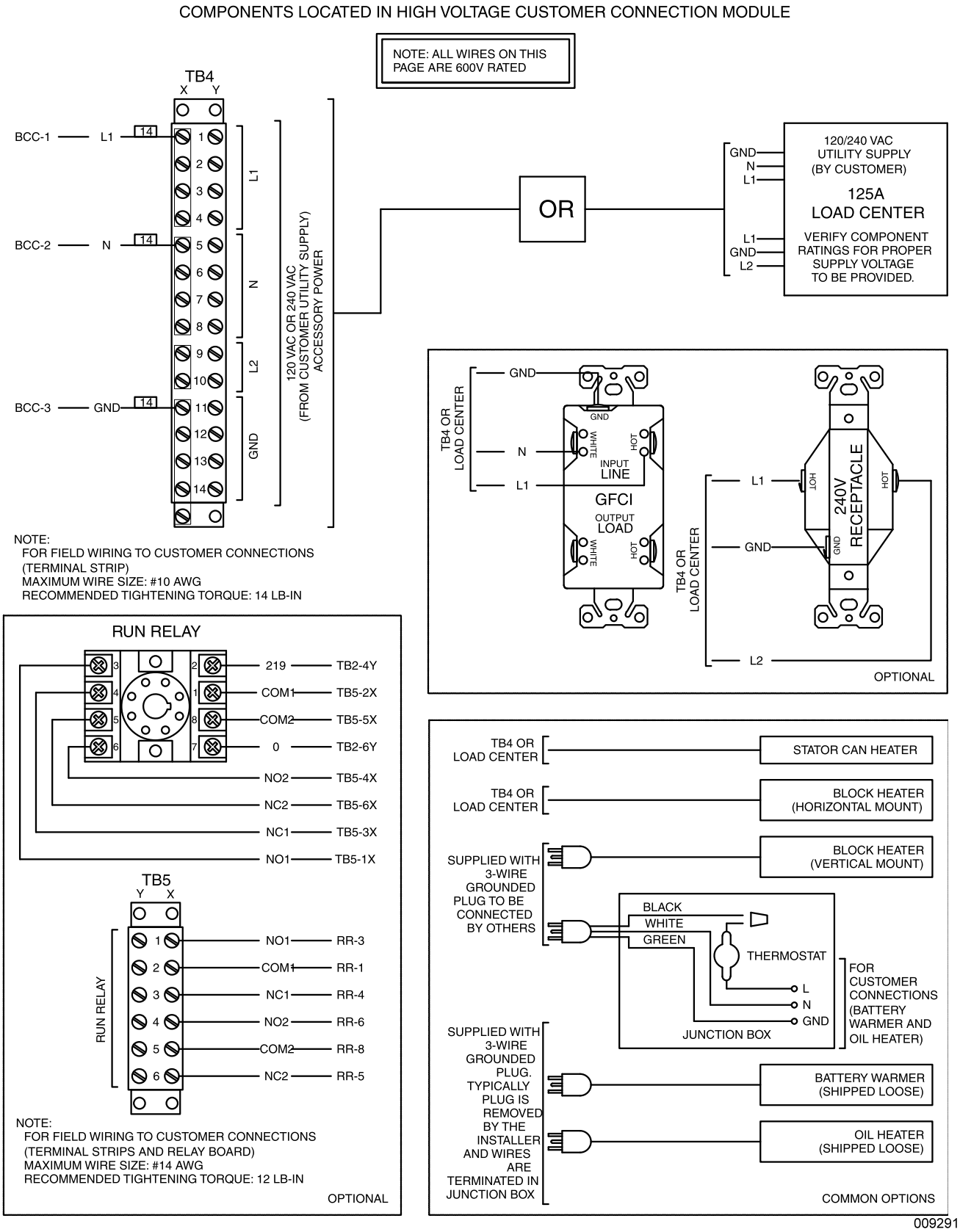

Figure 8-2. Typical Customer Connection in High Voltage Connection Module

Customer load wiring consists of the single-phase or three-phase connections between the transfer switch and the generator Main Line Circuit Breaker (MLCB). The wiring connects to the lugs on the E1, E2, E3, and neutral terminals of the MLCB. For general information regarding wire type, temperature rating, size range, and wire lug torque specifications, see ***Table 8-1***.

Field Wiring Connections to Buss Bars

Units supplied with Series C - R Frame Breakers rated 1,400, 1,600, 2,000, and 2,500A have buss bars supplied in the connection module for connection of the field conductors. To obtain a suitable electrical connection at the buss bars, take note of the following information.

- **Conductor Lugs:** Buss bars accept aluminum compression lugs suitable for copper or aluminum strand wire.
- **Suggested Manufacturer:** Penn Union Corporation.
- **Manufacturer's Part Number:** BLUA060D2.
- **Type:** Dual rated (AL/Cu), two 1/2 in studs spaced 1-3/4 in apart.
- **Wire Size:** 600 kcmil.
- **Hardware and Torque**: Fasten lugs to buss bars using either M12 or 1/2 in fasteners as follows:

Hardware	Torque
M12 X 65 mm Grade 8.8 Hex Head Cap Screw, with M12 Flat Washers, Lock Washer and Nut	Dry 75 ft-lbs (101.7 Nm), Lubed 58 ft-lbs (78.6 Nm)
1/2" -20 X 2.5" Grade SAE 5 Hex Head Cap Screw, with 1/2" Flat Washers, Lock Washer and Nut	Dry 85 ft-lbs (115.2 Nm), Lubed 65 ft-lbs (88.1 Nm)

Low Voltage Customer Connections

The Low Voltage Customer Connection Panel is where all of the low voltage control and communication wiring is connected. This wiring includes the following, depending on the type of system. Stand-alone and MPS system share some similar wiring requirements, with MPS systems having additional requirements depending on options used.

The low voltage customer connections typically use Class 1 Wiring Methods (NEC Article 725). Always follow the standards and methods appropriate to the circuits being wired.

Observe the maximum wire size and torque values for the terminal strip connections shown in the unit wiring diagram.

- Two-Wire Start - Typically labeled REMOTE START or 2-WIRE START; on the control side consists of wires 183 (5 VDC signal) and wire 0 (control ground). This control circuit is looking for remote start contact closure at the transfer switch.
- Line Power, Gen Power - 3 wires from the Automatic Transfer Switch auxiliary contacts indicating switch position. The wires on the control side are labeled DI-3 (Line Power), DI-4 (Gen Power), and 0 (Control Ground). DI-3 and DI-4 carry a 5 VDC signal looking for contact closure to control ground (wire 0) at the transfer switch.
- Communications RS-485 - Typically labeled COMM PORT RS485 +, -, and SHLD. On the control side they are labeled 390, 391, and SHLD. Communication wire must be stranded, twisted, shielded wire. The shield is typically grounded at only one end of each run. This communication wire connects to Remote Annunciator Panels (RAP) and Remote Annunciator Relay Panels (RRP), HTS and MTS transfer switches.
- DC power for remote annunciator panels - Typically labeled FUSED DC. On the control side it is labeled 220A (fused 24 VDC) or 15A (fused 12 VDC). The GND on the same terminal strip must be used to complete the circuit.
- Spare Outputs, Customer Configurable Relays - Typically labeled SPARE OUTPUTS, these output relays can be configured to provide contact change for up to four status indicators. The output relay contacts are rated for 5A at 30 VAC/30 VDC. The relays are programmed using Genlink-DCP software working with the control panel.

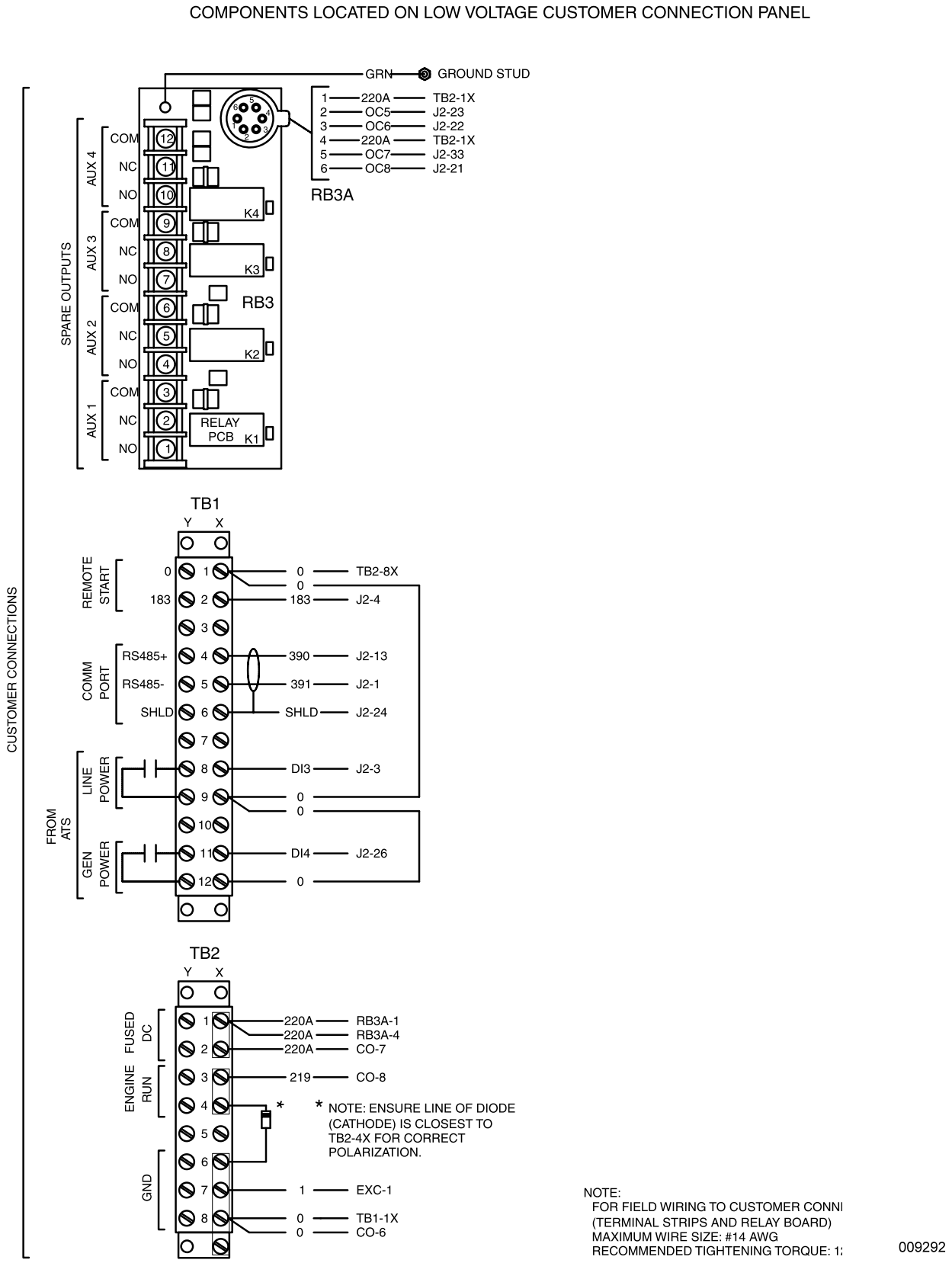

Figure 8-3. Typical Industrial Low Voltage Connection Panel Diagram

Table 8-2. Low Voltage Control Wiring Length and Size

Maximum Cable Length	Recommended Wire Size
Up to 460 ft (140 m)	No. 18 AWG
461 to 730 ft (141 to 223 m)	No. 16 AWG
731 to 1,160 ft (223 to 354 m)	No. 14 AWG
1,161 to 1,850 ft (354 to 565 m)	No. 12 AWG

Transfer Switch Location

The location of the transfer switch is important. Consider the following:

1. Locate the transfer switch as close to the emergency load as practical to avoid interruptions of the emergency power system due to natural disasters or equipment failures.
2. Locate the transfer switch in a clean, dry, well ventilated location, away from excessive heat. When the ambient air is above 104 °F (40 °C), fuses and circuit breakers must be derated. Allow adequate working space around the transfer switch.
3. Install a circuit breaker (or fuses) in the line between the generator and the transfer switch. Generator sets are available with properly sized circuit breaker built into the generator control. The circuit breaker can be separately mounted. In the case of very large circuit breakers, a separate floor mounted circuit breaker is easier to wire up than a wall mounted breaker.
4. Install power and control wires in separate solid conduit with flexible sections at the generator set. The flexible sections prevent vibration from damaging the conduit. All power conduits from the generator set must contain all three phases.
5. Never install control wires in the same conduit as power conductors.
6. Conduit, wire, circuit protective device sizes, and insulation must conform to applicable local and national codes and regulations.
7. Be certain to seal around conduits that penetrate the walls of the generator set room to reduce the amount of noise transmitted to the surrounding areas of the building and maintain site fire code rating.

Battery

DANGER

Electrocution. Do not wear jewelry while working on this equipment. Doing so will result in death or serious injury.

(000188)

WARNING

Explosion. Do not dispose of batteries in a fire. Batteries are explosive. Electrolyte solution can cause burns and blindness. If electrolyte contacts skin or eyes, flush with water and seek immediate medical attention.

(000162)

WARNING

Explosion. Batteries emit explosive gases while charging. Keep fire and spark away. Wear protective gear when working with batteries. Failure to do so could result in death or serious injury.

(000137a)

WARNING

Equipment damage. Only qualified service personnel may install, operate, and maintain this equipment. Failure to follow proper installation requirements could result in death, serious injury, and equipment or property damage.

(000182a)

WARNING

Electrical shock. Disconnect battery ground terminal before working on battery or battery wires. Failure to do so could result in death or serious injury.

(000164)

WARNING

Risk of burns. Batteries contain sulfuric acid and can cause severe chemical burns. Wear protective gear when working with batteries. Failure to do so could result in death or serious injury.

(000138a)

WARNING

Risk of burn. Do not open or mutilate batteries. Batteries contain electrolyte solution which can cause burns and blindness. If electrolyte contacts skin or eyes, flush with water and seek immediate medical attention.

(000163a)

WARNING

Environmental Hazard. Always recycle batteries at an official recycling center in accordance with all local laws and regulations. Failure to do so could result in environmental damage, death, or serious injury.

(000228)

Always recycle batteries in accordance with local laws and regulations. Contact your local solid waste collection site or recycling facility to obtain information on local recycling processes. For more information on battery recycling, visit the Battery Council International website at: ***http://batterycouncil.org***

IMPORTANT NOTE: Stationary emergency generators installed with automatic transfer switches will crank and start automatically when NORMAL (UTILITY) source voltage is removed or is below an acceptable preset level. To prevent automatic startup and possible injury to personnel, do not connect battery cables until NORMAL source voltage at the transfer switch is correct and the system is ready to be placed into operation.

IMPORTANT NOTE: Verify the AUTO/OFF/MANUAL switch is set to OFF before connecting the battery cables. If the switch is set to AUTO or MANUAL, the generator can crank and start as soon as the battery cables are connected.

IMPORTANT NOTE: Verify the utility power supply to the battery charger is turned OFF and the 10A and 15A fuses are removed from the generator control panel and the ATC style fuse removed from the battery charger, or sparking may occur at the battery posts as the cables are attached and cause an explosion.

NOTE: A negative ground system is used. Battery connections are shown on the wiring diagrams. Verify the battery is correctly connected and terminals are tight. Observe battery polarity when connecting the battery to the generator set.

Battery Location

Locate batteries as close as possible to the generator set to minimize starting circuit resistance. High starting circuit resistance reduces starting cranking ability. The generator set data sheet lists the maximum allowable cranking system resistance. Mount batteries on a level rack away from dirt and liquids. Allow space for servicing (checking water level and level of charge). Cold ambient temperatures at the battery location substantially reduces the battery output.

Battery Size

The ability to start the engine depends upon battery capacity, ambient temperatures and coolant and oil temperatures. The engine and generator set Data Sheet lists minimum recommended battery capacity at various ambient temperatures. The recommended battery capacities are listed under cold cranking amps (CCA) at 0 °F (−18 °C). Battery capacities decrease as ambient temperatures decrease so it is important to specify batteries with the appropriate CCA rating at a temperature no higher than the minimum ambient temperature for the application.

Battery Charger

An engine mounted alternator to charge the batteries during operation is an available option. Standby generator sets require a solid state battery charger connected to utility power so the battery is charged continuously while the generator set is not running. The battery charger should be connected to the emergency circuit. The batteries on prime power generator sets are charged by the engine mounted alternator, if equipped.

Harmonic wave forms from solid state battery charges and belt driven alternators can cause the electronic governor on the engine to act erratically. To avoid this, the output of the battery charger or the belt driven alternator must be connected directly to the battery or to the battery terminals on the starter. Make control connections to the generator set control using a conduit with a flexible section at the generator set to avoid damage due to generator set vibrations.

NOTE: Thermostatically controlled coolant heaters are recommended on all after cooled standby generator sets. Oil pan immersion heaters are recommended for standby generator sets housed outside where ambient temperatures may drop below 0° F (−18° C). Coolant heaters and oil pan immersion heaters also are available.

Battery Cables

⚠CAUTION

Equipment damage. Do not make battery connections in reverse. Doing so will result in equipment damage.

(000167a)

The wire size (wire gauge) of the cables connecting the starter to the batteries must be large enough to ensure the resistance is less than the maximum allowable resistance of the cranking circuit. The total cranking circuit resistance includes the resistance of the cables from the starting motor to the battery and the resistance of all relays, solenoids, switches, and connections. For purposes of calculating cranking circuit resistance to select cable size, the resistance of each connection can be taken as 0.00001 ohms and the resistance of each relay, solenoid, and switch as 0.0002 ohms.

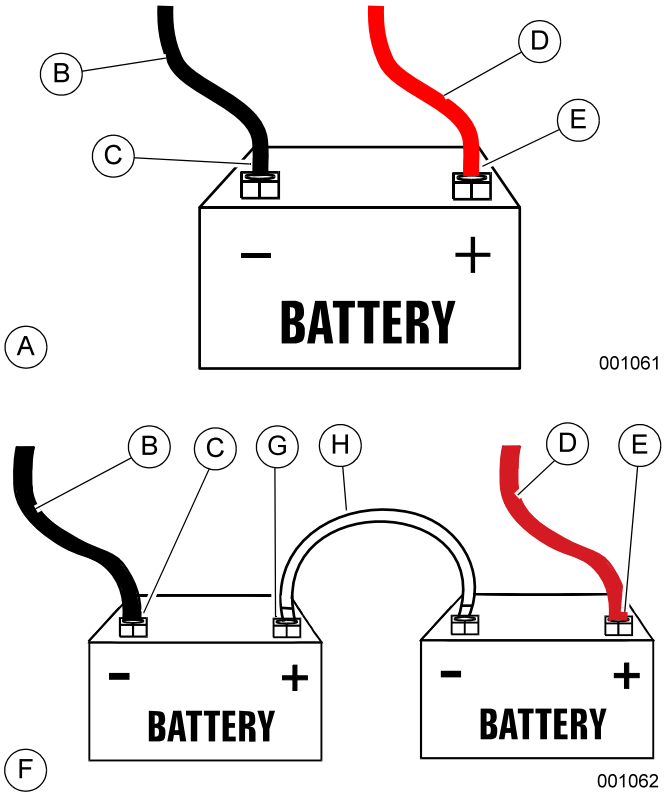

Figure 8-4. Battery Cable Connections

A	12 VDC system
B	Black lead to frame
C	Black (-)
D	Red lead from starter contactor
E	Red (+)
F	24 VDC system
G	Red or black jumper
H	Wire 13

Battery Installation and Replacement

When required, the battery must be replaced with one of equivalent size, voltage, and CCA (cold crank amp capacity). See the Unit Specification Sheet or contact an IASD for proper battery sizing.

A new battery must be filled with the proper electrolyte and be fully charged before installing.

Preliminary Instructions

1. Set the AUTO/OFF/MANUAL switch on the generator control panel to OFF.
2. Turn OFF utility power supply to the battery charger circuit.
3. Remove the 10A fuse from the generator control panel.
4. Remove the ATC style fuse from the battery charger.

Battery cables are connected to the generator connection points at the factory. Connect the cables to the battery posts as shown in ***Figure 8-4***.

12 VDC System

1. Connect the red battery cable from the starter contactor to the positive (+) battery post.
2. Connect the black battery cable to the frame ground to the negative (-) battery post.

24 VDC System

1. Connect the red battery cable from the starter contactor to the positive (+) post of the first battery (E).
2. Connect the black battery cable to the frame ground to the negative (-) post of the second battery (C).

NOTE: See ***Figure 8-4***. On 24V gaseous units, center tap wire number 13 (G) between the batteries.

3. Connect either a black or red jumper cable from the negative (-) post of battery A to the positive (+) post of battery B.

Final Instructions

1. Install the ATC style fuse in the battery charger.
2. Install the 10A fuse in the generator control panel.
3. Turn on the utility power supply to the battery charger circuit.
4. If the unit was previously operational, turn the AUTO/OFF/MANUAL switch on the generator control panel to AUTO.

This page intentionally left blank.

Section 9: Installation Checklists

Safety Checklist

NOTE: See ***Introduction and Safety*** for more information.

☐ Are manuals, wiring diagrams and other documentation readily available?

☐ Is there any evidence of freight damage?

☐ Does the enclosure have scratches or damage to painted surfaces (which would indicate lifting without a spreader bar)?

☐ Are all guards, covers, insulation blankets, and other protective devices in place?

☐ Are any parts or components worn, damaged, or missing?

☐ Is the generator properly grounded?

☐ Is a fire extinguisher kept near the generator?

☐ Is the room or building housing the generator properly ventilated?

☐ Is there any evidence of fuel, oil, or coolant leaks?

☐ Are any combustible materials left in the generator compartment?

☐ Is the area surrounding the generator clean and free of debris?

☐ Do these parameters meet all applicable codes and local jurisdiction?

Installation Planning Checklist

NOTE: See ***Installation Planning*** for more information.

☐ Is the generator set readily accessible for maintenance, repair, and firefighting purposes?

☐ Is the site clean and dry? Is the site provided with adequate drainage?

☐ Is there a minimum of 5 ft (152 cm) of clearance around the generator set to facilitate the repair or replacement of major components?

☐ Have adequate provisions been made for delivery of a fuel supply?

☐ Do these parameters meet all applicable codes and local jurisdiction?

Foundations and Mounting Checklist

NOTE: See ***Foundations and Mounting*** for more information.

☐ Is the generator set installed on a concrete pad capable of supporting its weight and accessories?

☐ Is the generator securely fastened to the concrete pad using suitable grade, size, and style fasteners?

☐ Is the concrete pad seated on a prepared solid subsurface using appropriate reinforcing bar or expanded wire mesh?

☐ Does the concrete pad extend beyond the frame rails at least 18 in (46 cm) and above the surrounding surface by 3 to 8 in (8 to 20 cm)?

☐ Is the concrete pad flat and level to within 1/2 in (13 mm)?

☐ Are plugs installed in the tie-down holes of the frame rail?

☐ Is a containment dike provided for fuel and oil spillage?

☐ If installed on a roof or combustible floor, is the generator seated on a layer of sheet metal and non-combustible insulation? Do the sheet metal and insulation extend beyond the generator base at least 12 in (30.5 cm) on all sides?

☐ Is the bottom of the generator set enclosed?

☐ Do all fuel, coolant, exhaust, and electrical lines have flexible sections where they connect to the generator?

☐ Is all piping properly supported and secured?

☐ Do these parameters meet all applicable codes and local jurisdiction?

Ventilation System Checklist

NOTE: See ***Ventilation System*** for more information.

- ☐ Is there sufficient air flow for cooling and ventilation?
- ☐ Does the room in which the generator set is installed have adequate air flow for combustion and for removal of heat from the engine, exhaust system, and generator?
- ☐ Does the air inlet face the direction of prevailing winds?
- ☐ Has system piping been properly sized? Have all heat loads been taken into consideration?
- ☐ Has system been properly protected from freeze up and corrosion?
- ☐ Have standby equipment heaters been specified?
- ☐ Have all electrically driven devices been connected to load side of EPS connection points?
- ☐ Have system drain valves and air eliminators been installed?
- ☐ Does the air outlet face noise sensitive areas without noise attenuating devices?
- ☐ Do gravity louvers face inward for air intake and outward for discharge?
- ☐ Are louvers and other mechanical linkages operational? Are louvers properly wired to engine run relay?
- ☐ Are electrically operated ventilation devices powered under all operating modes?
- ☐ For indoor applications, is supply air and radiator outlet air ducting kept to a minimum?
- ☐ For indoor units with supply air ventilation, is there a means to control ambient air temperature in extreme cold conditions?
- ☐ Does the installation appear to have the necessary accessories to enable fast, reliable starting and operation in adverse weather conditions (such as engine jacket water heaters, lube oil heaters, and battery warmers)?
- ☐ Do these parameters meet all applicable codes and local jurisdiction?

Exhaust System Checklist

NOTE: See ***Exhaust System*** for more information.

- ☐ Is the exhaust outlet located upwind or near any building air intakes?
- ☐ Is a section of flexible piping used at the engine exhaust outlet?
- ☐ Is the exhaust piping sizing adequate to prevent backpressure?
- ☐ Are the exhaust piping components insulated where necessary to prevent operator burns and reduce pipe radiant heat losses?
- ☐ Are thimbles, pipe sleeves, or fire proof materials used where the exhaust pipe passes through building materials, such as walls or roofs?
- ☐ Is the exhaust outlet pipe horizontal to prevent entry of snow or rain?
- ☐ Is the proper silencer installed in the exhaust system to reduce noise levels?
- ☐ Does the exhaust outlet direct exhaust gases toward any openings (such as doors, windows, or vents) of an occupied building?
- ☐ Does the exhaust outlet direct exhaust gases toward any material that could be combustible?
- ☐ On installations with more than one engine, does each engine have its own exhaust system?
- ☐ Does the system use flanged exhaust pipe rated for at least 1,500 °F (816 °C) and constructed of schedule 40 black iron steel?
- ☐ Are flex joints used between the engine connection point and the rigid piping?
- ☐ Are flexible bellows used to allow for linear and axial movement of rigid piping due to thermal expansion and contraction?
- ☐ Does any extended exhaust ductwork have as few bends as possible?
- ☐ Do all bends employ sweep elbows with a radius at least three times the pipe diameter?
- ☐ Are exhaust piping and silencers properly supported and connected?
- ☐ Has all strain and excessive weight been removed from the flex coupling connected to the engine?

- ☐ Is exhaust piping sloped away from the engine outlet?
- ☐ Is a water trap with drain installed at the lowest point of the exhaust piping?
- ☐ Has a condensate drain been installed at the outlet of the silencer?
- ☐ Are exhaust discharges directed away from combustible surfaces and inhabited areas?
- ☐ Are there at least 9 in (22.9 cm) of clearance between exhaust piping and any combustible surface?
- ☐ Is exhaust piping kept clear of fuel tanks and fuel lines?
- ☐ Is the exhaust backpressure within specification?
- ☐ Does the exhaust outlet piping on horizontal exhaust stacks terminate with a 45º tailpipe?
- ☐ Is the ductwork from the radiator outlet flange to the exhaust vent opening as short and straight as possible?
- ☐ Is any exhaust air recirculated back to the generator area?
- ☐ Do motorized louvers have power during all modes of operation?
- ☐ Is the O_2 sensor and catalyst correctly installed, if provided?
- ☐ Are heat shields and blankets used to lower surface temperatures where required?
- ☐ Are there any unauthorized customer supplied and fitted heat shields that may increase surface temperatures?
- ☐ Is the exhaust piping isolated from the engine with flexible connections?
- ☐ If required, is a properly rated silencer installed?
- ☐ Is the exhaust piping properly supported?
- ☐ Is off-engine exhaust piping covered with high temperature insulation blankets where necessary?
- ☐ Are insulation blankets improperly installed on exhaust manifolds, turbocharger housings or other engine components?
- ☐ Is exhaust piping routed away from fuel pumps, fuel lines, fuel filters, fuel tanks and other combustible materials?
- ☐ Is exhaust pipe outlet cut to a 30° to 45° angle to reduce exhaust gas turbulence and noise?
- ☐ Is the exhaust system designed to prevent snow or rain from entering the engine through the exhaust outlet?
- ☐ Is the exhaust pipe diameter too small?
- ☐ Does the exhaust system have an excessive number of sharp bends?
- ☐ Is the exhaust piping too long?
- ☐ Is the system provided with a tap to measure exhaust backpressure? Is the pressure tap located in a straight length of exhaust pipe before the silencer and as close to the turbocharger as possible?
- ☐ Is the system combined with the exhaust systems of boilers or other engines?
- ☐ Do exhaust louvers face opposite the prevailing wind? Are louvers angled so that rain and snow do not pass through? Are louvers properly sized and face outward for exhaust discharge? Do any motorized louvers have power during all modes of operation?
- ☐ Do these parameters meet all applicable codes and local jurisdiction?

Gaseous Fuel System Checklist

NOTE: See ***Gaseous Fuel Systems*** for more information.

- ☐ Are fuel supply lines properly sized and installed? Were fuel supply lines purged and leak tested?
- ☐ Are water traps and drip legs installed to remove water and condensate from the gas flow?
- ☐ Is the fuel pressure regulator properly sized?
- ☐ Is the primary fuel pressure regulator outlet at least 10 ft (305 cm) from the generator connection point?
- ☐ Is a pressure test port installed before the fuel shutoff solenoids at the inlet to the unit mounted regulator?
- ☐ Does the generator have a dedicated fuel supply which is not shared with any other appliances?
- ☐ Is the regulator sized to have a fuel flow delivery rating (cfh) at least 10% greater than the 100% rated kW fuel consumption requirement of the generator?
- ☐ Is the fuel pressure regulator approved for a mechanized engine application?
- ☐ Does the fuel pressure regulator have an accuracy rating of 1% or less and have a maximum allowable pressure drop of 1 to 2 in H_2O (0.25 to 0.50 kPa) under all operating conditions, that is, static, cranking, running at no load, and running at full load (as measured at the primary fuel pressure regulator)?
- ☐ Does the fuel pressure regulator have a spring rating of 7 to 15 in H_2O (1.7 to 3.7 kPa)?
- ☐ Does the system use black iron piping rigidly mounted and protected against vibration?
- ☐ Is a length of flexible hose installed between the generator connection point and the rigid supply piping? Is the flexible hose straight without bends, twists or kinks?
- ☐ Is the piping correctly sized to maintain the required supply pressure and volume under varying load conditions?
- ☐ Was an approved pipe sealant or joint compound used on all threaded fittings?
- ☐ Is a fuel shutoff valve installed near the unit? Was proper operation of the fuel shutoff valve verified?
- ☐ Was the Final Operating Test performed to verify the system operates correctly in all modes of operation?
- ☐ Is there any evidence of leakage at any hoses, clamps, or fittings?
- ☐ Do these parameters meet all applicable codes and local jurisdiction?

Diesel Fuel System Checklist

NOTE: See ***Diesel Fuel Systems*** for more information.

- ☐ Is black iron or steel piping used from the fuel source to the flexible connection at the generator?
- ☐ Is any galvanized pipe used for diesel fuel applications?
- ☐ Are any pipe or fittings constructed of cast iron or aluminum?
- ☐ Is a flexible length of fuel line installed between the rigid fuel supply piping and the generator fuel connection?
- ☐ Are the diesel fuel supply tanks at the same level as the engine fuel pump, but lower than the fuel injectors?
- ☐ Is the vertical lift between the engine fuel pump and the fuel level in the tank less than 40 in (102 cm)?
- ☐ Are fuel filters and drains located in easily accessible areas?
- ☐ Is there evidence of leakage or damage at any hoses, clamps or fittings?
- ☐ Has the fuel system been primed (bled of air)?
- ☐ Do these parameters meet all applicable codes and local jurisdiction?

Electrical System Checklist

NOTE: See ***Electrical System*** for more information.

- ☐ Is all wiring correctly sized for load and length of run?
- ☐ Is all wiring correctly routed?
- ☐ Is all wiring correctly supported?
- ☐ Is all wiring correctly connected?
- ☐ Are wire lugs fastened to buss bars using appropriate hardware? Is hardware properly tightened to specified torque?
- ☐ Are all other terminals correctly tightened using the specified torque?
- ☐ Are batteries correctly sized?
- ☐ Are batteries correctly installed?
- ☐ Are the battery fluid levels correct?
- ☐ Are battery cables and connections clean and free of corrosion?
- ☐ Are the battery cables correctly connected? Are the terminal lugs correctly tightened?
- ☐ Is the battery condition and state of charge acceptable?
- ☐ Is area housing storage battery properly ventilated?
- ☐ Are batteries located near a source of flame or spark?
- ☐ Are AC wire sizes and connections correct?
- ☐ Are DC and communication wire sizes and connections correct?
- ☐ Are DC and communication wires routed separately from AC wires?
- ☐ Are items such as block heaters and battery charger properly matched with utility supply voltage?
- ☐ Are battery charger and block heater properly connected?
- ☐ Are remote start Wires 0 & 183 pulled and connected inside lower control panel of generator and inside transfer switch?
- ☐ Are communications wires (RS-485) and power wires (for RAP/RRP) pulled and terminated correctly inside control panel, remote annunciator, and transfer switch?
- ☐ Is the AUTO/OFF/MANUAL switch in the OFF position?
- ☐ Is the grounding rod installed?
- ☐ Is the block heater operational?
- ☐ Is the battery charger operational?
- ☐ Are all AC electrical connections tight at the circuit breaker and transfer switch?
- ☐ Are all electrical connections (wiring, wire ties, clamps, terminal ends, connectors) on the generator tight?
- ☐ Are all electrical plugs throughout the generator seated correctly and fully inserted into their receptacles?
- ☐ Is there proper voltage and phase rotation at the transfer switch?
- ☐ Is manual operation of the transfer switch smooth and non-binding?
- ☐ Are dip switch settings in transfer switch OK?
- ☐ Do these parameters meet all applicable codes and local jurisdiction?

This page intentionally left blank.

Part No. G046622 Rev. H 03/20/2020
©2020 Generac Power Systems, Inc.
All rights reserved.
Specifications are subject to change without notice.
No reproduction allowed in any form without prior written consent from Generac Power Systems, Inc.

Generac Power Systems, Inc.
S45 W29290 Hwy. 59
Waukesha, WI 53189
1-888-GENERAC (1-888-436-3722)
www.generac.com

GCS SF3.8_Bid Package#4 - BOECC Geneator & ATS Installation Project

NOTE: The Owner has already pre-purchased this Generator Set as part of Bid Package #3. These guidelines are being issued for reference with regard to installation of the Generator Set as part of this Bid Package #4 project

GENERAC®
INDUSTRIAL POWER

DESIGN GUIDELINES

Natural Gas Supply System
Design Guide for Generac
Industrial Spark Ignited Generators

GENERAC
INDUSTRIAL POWER

DESIGN GUIDE

Natural Gas Supply System Design Guide for Generac Industrial Spark Ignited Generators

INTRODUCTION

This design guidance document is to be provided to the consulting engineer during the project design phase and again at the time of submittal to the engineer and mechanical contractor for all Generac Industrial natural gas and propane fueled generator sets.

The following pages provide information and design best practices that have been demonstrated to minimize gas pressure instability and flow deficiency problems in the field. These design guidelines are to be used in combination with applicable national standards,[1] local fuel gas piping codes, and Generac's Installation Guidelines for Stationary Industrial Generators (Document #046622).

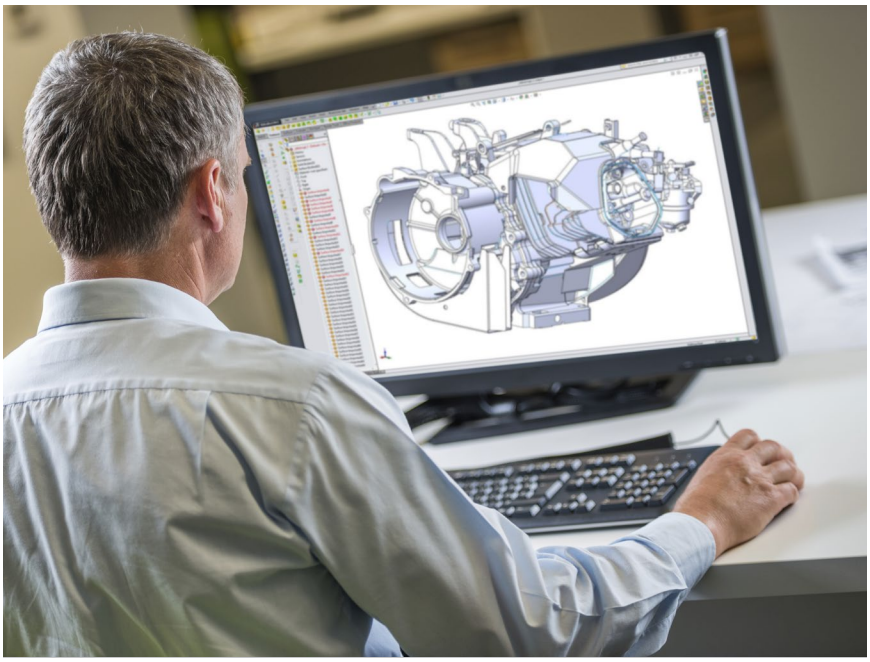

CONTINUED

1. DESIGN OBJECTIVES

1.1. Provide the generator with a stable gas supply pressure over varying gas flow demand conditions. Maximum gas flow for all Generac generators are listed on the unit nameplate and generator data sheets.[2]

1.2. The pressure difference measured at the generator fuel pressure test port should typically be less than 2" water column (w.c.) from no-load running to full-load running condition.

1.3. The gas pressure must remain above the minimum specified for the generator set at all times, under all operating conditions. Failure to maintain adequate gas pressure and flow will result in operational problems such as extended crank cycles, inability to carry full load, and unstable engine speed.

1.4. Maintain a pressure and flow margin to allow for seasonal pressure variation on the upstream gas system. The emergency system must be before the facility shutoff.

1.5. Other facility loads must be factored in while sizing the Generator fuel system. It is recommended that the generator should have a dedicated fuel supply, which is not shared with any other appliances (furnace, water heaters, ranges, etc.) and the Generator fuel supply line shall be installed away from a high heat source so that the fuel temperature must remain at an acceptable operating rage.

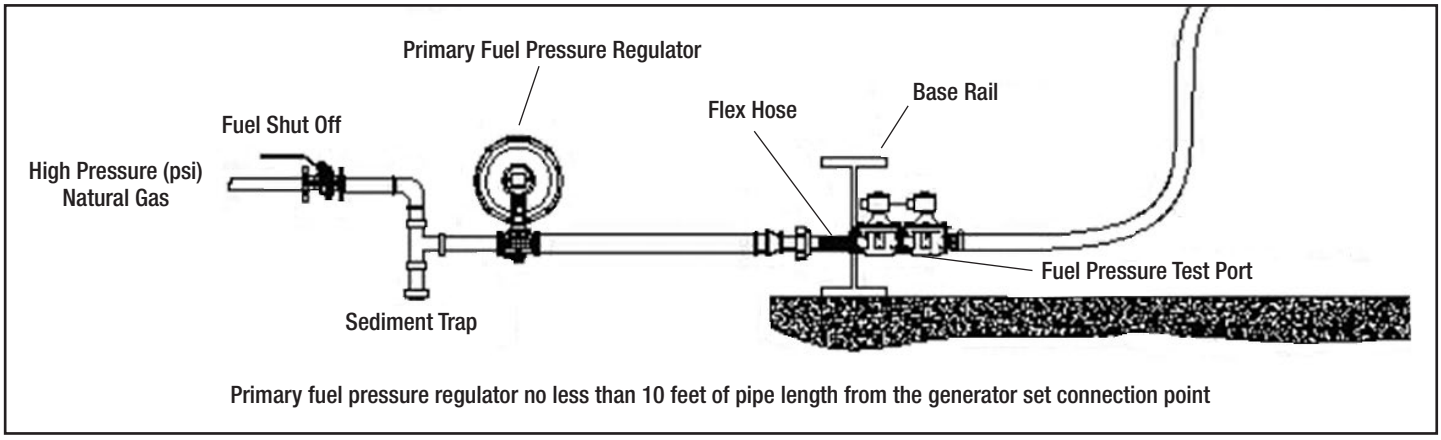

Figure 1: Typical natural gas supply regulator and piping configuration.

2. REGULATOR PERFORMANCE ATTRIBUTES[3]

2.1. Regulator Body Size: The inlet and outlet ports on a regulator are typically a single metal casting. The “body size” refers to the nominal diameter of the inlet and outlet pipe threads (or flange).

The regulator body size should never be larger than the pipe size, but it may be smaller provided the required flow can be obtained through the smaller regulator body size.

2.2. Pressure differential: The maximum flow rate of a service regulator is constrained by the gas pressure differential across the inlet and outlet port. When selecting a regulator for a specific gas flow requirement, it must correspond to the expected nominal upstream and downstream gas pressures. Consult manufacturers' published flow rate tables at various inlet and outlet pressure values to select an appropriate regulator *(See the example in Table 1).*

2.3. Flow and droop: Select a direct acting regulator that will deliver approximately 1.5 times the maximum gas flow required by the generator with 1" – 2" water column (w.c.) pressure droop at the expected nominal upstream and downstream gas pressures. Direct acting regulators provide the quick response required for controlling fast changing gas flow demands encountered in engine-generator applications.

For example, a Generac SG500 generator, configured for 7" – 11" w.c. nominal gas pressure, requires 6,000 CFH of gas at full load. The selected regulator must be rated to flow approximately 9,000 CFH (1.5 X 6000 CFH = 9000 CFH). Given an upstream gas pressure of 2 psi, a 1½" Model 122–12 regulator with a blue spring would be the first choice. However, assume there is a substantial risk of seasonal pressure variation where the upstream gas pressure may fall closer to 1 psi, a larger 2" Model 122–12 regulator with a blue spring will still provide the required flow at the lower upstream pressure.

INLET PRESSURE	Set Point 5" w.c.	Set Point 7" w.c.	Set Point 11" w.c.	Set Point 18" w.c.	Set Point 28" w.c.	Set Point 2 w.c.	REGULATOR SIZE AND MODEL
	Red Spring 1" w.c. DROOP	Blue Spring 1" w.c. DROOP	Green Spring 2" w.c. DROOP	Orange Spring 2" w.c. DROOP	Orange Spring 3" w.c. DROOP	Black Spring 1/4" PSI DROOP	
8" w.c.	4000	3000	-	-	-	-	1 ½" Model 122-12
14" w.c.	4900	4500	3700	-	-	-	
1 psi	6600	6500	6000	5750	-	-	
2 psi	10500	10000	9800	9000	9500	-	
3 psi	12000	12000	11100	10000	10500	8900	
5 psi	14500	14500	13900	12000	12700	10000	
10 psi	16000	16000	15000	13500	14000	12700	
15 psi	18000	18000	19000	19000	20000	18000	
8" w.c.	5000	4000	-	-	-	-	2 ½" Model 122-12
14" w.c.	8800	8000	6600	-	-	-	
1 psi	12200	12000	11500	10700	-	-	
2 psi	18200	18000	17300	16500	16900	-	
3 psi	25000	25000	24000	22300	23000	18000	
5 psi	32000	32000	30000	28100	29000	27400	
10 psi	38000	38000	35000	32200	33000	30000	
15 psi	38000	38000	40000	39000	40000	36000	

Table 1: Typical regulator flow capacity table. Note how the same model regulator will flow larger volumes of gas with a higher inlet pressure while maintaining a set downstream pressure. Courtesy of Sensus.

CONTINUED

Gas pressure regulators are feedback control systems driven by the pressure differential across the diaphragm and the case spring. When gas flow on the low-pressure side of the regulator causes a pressure drop, spring force in the regulator case pushes on the diaphragm and opens the valve to increase gas flow to maintain the set pressure. The dynamic pressure maintained by the regulator decreases slightly as gas flow rate increases *(Figure 2).* This phenomenon is known as pressure droop or, more simply, "droop". Regulator manufacturers design products to minimize pressure droop while still maintaining regulator stability for a given gas flow rate.

Regulators tend to exhibit the best stability and response time when they operate near the middle of their proportional band. Selecting a regulator with a published maximum gas flow of approximately 1.5 times the full-load gas flow required by the generator avoids operation very close to the fully open or fully closed position, minimizing the probability of unstable operation. A regulator that is too large, capable of flowing several times the maximum gas flow required by the generator, will operate very close to its fully closed position which may also result in unstable operation.

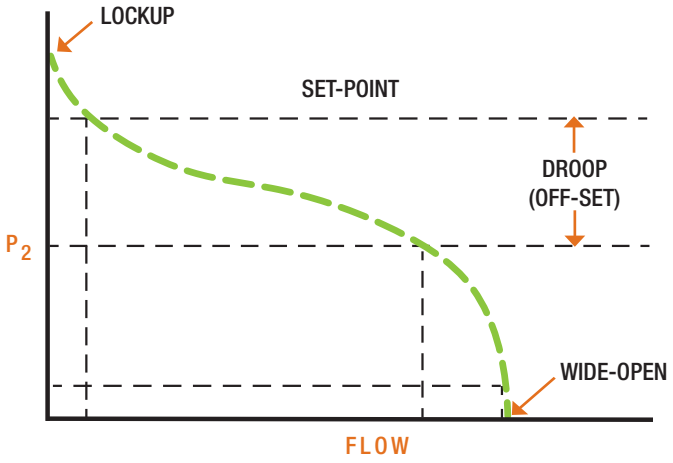

Figure 2: Pressure droop characteristic of a typical direct-operated regulator. Courtesy of Emerson-Fisher Natural Gas Application Guide.

2.4. Spring Rate, Accuracy, and Response Time:[4] The regulator spring provides the force required to open the regulator valve and maintain the desired operating pressure. There may be more than one spring covering a desired operating pressure. Spring selection plays a role in regulator accuracy and response time.

In general, using the lightest spring rate *(a blue spring from the prior example referencing Figure 2)* that achieves the desired operating pressure will provide the best accuracy, minimizing pressure droop across the range of expected gas flow rates. However, a response that is "too fast" can introduce oscillation and instability. If instability is experienced during operation, moving to the next higher spring *(a green spring from the prior example referencing Table 1)* that includes the desired operating pressure is one potential method to mitigate oscillations.

2.5. Orifice size: For regulators where various orifice sizes are available, select the smallest orifice that will provide approximately 1.5 times the maximum gas flow required by the generator. Selecting an orifice that is significantly larger than necessary will result in the valve operating very close to the seat (nearly closed) and may result in pressure instability, increased seal wear, or audible noise from the regulator.

2.6. Lockup or hard shutoff: A regulator with a lockup or hard shutoff feature must be used. Lockup is the pressure above the regulator setpoint that is required to shut the regulator off tight so no gas flows. Typically, the lockup pressure is 1"-3" W.C. above the dynamic pressure setpoint measured when a small volume of gas is flowing *(i.e. no-load running condition on the generator)*. The lockup feature prevents the low-pressure side of the regulator from

CONTINUED |

creeping up to the regulator line side pressure during long periods of zero gas flow when the generator is not running. If excessive gas pressure is allowed to build up on the low-pressure side of the regulator, the generator solenoid valves may be unable to open against the excessive pressure and the engine will not start.

2.7. Internal vs. external pressure registration:

Internally registered regulators are recommended because they generally have fewer operational problems in the field.

The diaphragm case of a regulator must have a connection to the low-pressure side in order to function. Internally registered regulators have a passage built into the body casting which provides a path for low-pressure gas to act against the diaphragm and spring force. Externally registered regulators lack this internal connection path but instead have an additional pipe fitting on the regulator case where a smaller diameter pipe is field-fabricated to a downstream location on the low-pressure side of the main gas piping system. Because all the pipe fabrication is done in the field, variation in the main gas piping system and the remote pressure registration line can cause unpredictable performance that is difficult to troubleshoot.

Externally registered regulators can be used, but the engineer and installation contractor must be aware of the dynamic effects introduced by variables such as; flow turbulence, length and diameter of the sensing line, location of the sensing point in the low pressure piping system, increases and decreases in pipe diameter.

If an externally registered regulator is used, locate the remote sensing point 8 to 10 pipe diameters downstream of the regulator in the largest diameter pipe section. The start of 8 to 10 pipe diameters is

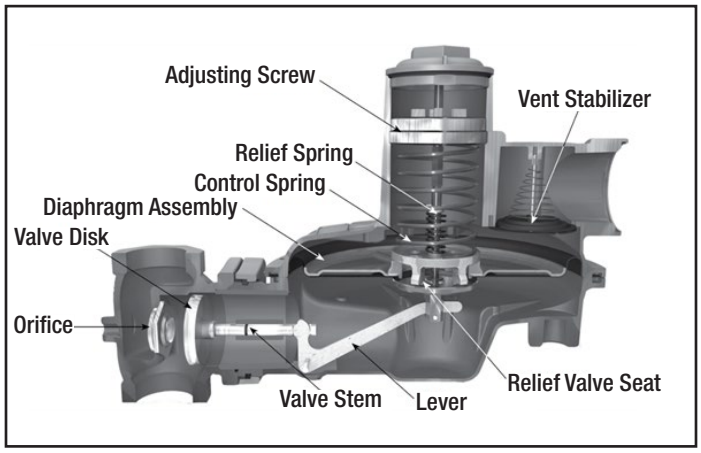

Figure 3: Major components of a direct-acting lever-type regulator, internally registered. *(Courtesy Emerson Fisher).*

after the transition to the largest diameter pipe or any other throttling devices, component and/or fittings that will disrupt flow and create turbulence. The sensing line should be taken off the top of the main line to keep it free of debris and condensate. If possible, it should horizontally slope back to the main so that any condensate will drain back into the main rather than accumulate in the regulator's diaphragm case. Minimize the fittings used in running the sensing line. An externally registered regulator will respond to the pressure changes sensed at the remote tap rather than within the regulator body. It is advisable to install a pressure gauge at the sensing line tap on the main as this will be the control point of the regulator.

2.8. Recommended gas regulators:

The list of regulators below is not an exhaustive list of all suitable regulators that are available in the market, nor is it a list of "Generac Approved" regulators. The list is intended to help design engineers and mechanical contractors identify a range of products that have demonstrated their suitability for engine-generator service in past projects. Consult your Generac Distributor or gas regulator supplier for additional information.

- Sensus[5]
- Emerson Fisher
- Itron

CONTINUED

3. FLOW CHARACTERISTICS OF GAS PIPING SYSTEMS:

3.1. Elbows and Tees: Minimize the number of elbows and tee fittings that increase pressure drop and flow turbulence in the system. Where more than three elbows and/or tees are required, use of swept radius elbows (typical for welded pipe sections) will help reduce pressure loss.

3.2. Reducing bushings (swages): Pipe reducing bushings are the transition from a larger to smaller pipe diameter or vice versa. Gas flow velocity is slower in a larger diameter pipe compared to a smaller diameter pipe moving the same volume of gas. If a remote sensing regulator is used, it is important to understand the dynamic pressure effects caused by the gas flow velocities in different sized pipe sections and design accordingly.[6]

In some installations where it is impractical to run approximately 10 feet of pipe, swaging up to a larger diameter pipe is a practical method to increase the gas volume between the service regulator and the generator fuel system. For installations where this method is used, an internally registered regulator is strongly recommended.

3.3. Flexible fuel lines: Flexible fuel lines are intended to isolate the rigid gas piping system from vibrations on the generator set and must be installed as straight as possible. They are not intended to correct misaligned pipe sections or to serve as an elbow.

3.4. Regulator vent lines: Regulator vents must open downward and be screened to prevent insects and water from entering the regulator case. Regulator vent lines should be kept as short as possible to reduce the possibility of affecting the regulator response time.

4. DESIGN REQUIREMENTS:

4.1. Use Generac's Power Design Pro[7] gas pipe sizing module to determine the minimum recommended pipe size for the selected generator's gas flow given the anticipated length of the pipe run between the service regulator and the generator fuel inlet, including all elbows. Select the option to design for <0.5" water column pressure drop. Refer to the Table 1 for more detail.

4.2. The flexible fuel line shall be installed at the generator fuel inlet located on the frame rail and must exit the generator perpendicular to the frame rail. No pipe fittings (elbows or swages) are permitted between the flexible fuel line and the generator fuel inlet port.

4.3. The flexible fuel line must be as straight as possible. It is designed to isolate the rigid gas piping system from vibrations on the generator set. It is not intended to correct misaligned pipe sections or to serve as an elbow.

4.4. Given the combined effects of pipe friction loss and regulator droop, gas pressure should typically not drop more than 2" w.c. from no-load running to full-load running. Under no circumstances shall the gas pressure measured at the test port on the inside frame rail of the generator set drop below the minimum rated gas pressure listed on the generator nameplate.

4.5. Full-port ball valves, the same diameter as the pipe which they are connected to, are to be used for all shut-offs.

4.6. For multiple generator set installations (Generac MPS), each generator set must have its own regulator installed. Do not share a single large regulator across multiple generator sets.

CONTINUED |

Table 2: Natural Gas Fuel Pipe Sizing

	PIPE SIZE (inches)								
KW	1.00"	1.25"	1.5"	2"	2.5"	3"	4"	5"	6"
25	10	95	220	739					
30		60	147	565					
40		25	75	315	790				
50			50	220	560				
60			25	145	390	1185			
70			5	75	225	710			
80				65	195	630			
100				40	140	460			
130					50	215			
150					30	150			
200					15	95	475		
250						62	315	1020	
300						35	255	850	
350						10	145	535	
400							107	452	
500							42	245	650
625								120	395
750								112	380

TABLE VALUES ARE MAXIMUM PIPE RUN IN (feet)

NOTE: Pipe sizing is based on 0.5" H_2O pressure drop for Naural Gas. Also sizing includes nominal number of elbows and tees. Please verify adequate service and meter sizing.

5. RECOMMENDED DESIGN BEST PRACTICES:

5.1. Provide approximately 10 feet of pipe between the regulator and generator gas inlet. This does not have to be a single straight run. The pipe volume decouples the dynamic response of the generator throttle control system and the service regulator, reducing the probability of oscillation and unstable operation.

5.2. Avoid installing elbows or pipe swages immediately upstream or downstream of a regulator, unless specifically allowed by the regulator manufacturer. This will increase the turbulence of the gas flow, having a negative impact on pressure regulation accuracy and stability. Regulator manufacturers typically recommend 10 pipe diameters of straight pipe run upstream and downstream of a regulator. For example, on a regulator with 2" diameter pipe fittings, 20" of straight pipe should be fitted upstream and downstream of the regulator. When field conditions prohibit meeting both constraints, place the elbow on the high-pressure side of the regulator. The straight run on the low-pressure side is more critical for proper regulator operation.

5.3. Avoid installing pipe swages immediately before or after an elbow. The combined flow turbulence of the swage and elbow in close proximity can cause unexpectedly large pressure drops at high flow rates.

CONTINUED

5.4. Minimize the number of 90-degree elbows. If more than three elbows are needed downstream of the regulator to accommodate the design, swept radius elbows are recommended to minimize pressure drop.

5.5. Use of an internally registered regulator is strongly recommended. Regulators with external pressure registration lines add an additional variable into the system that can be difficult to troubleshoot should the gas pressure become unstable under high-flow conditions.

5.6. For more stable gas flow with longer gas piping, the high pressure side may be raised as high as code allows and regulate it down to generator operating pressure at the generator. (This is the same design concept used in the electrical industry; "high voltage for long distances, transformation at the loads"). This may also help reduce cost as pipe diameters can be smaller, saving material and installation costs.

6. INSTALLATION AND COMMISSIONING RECOMMENDATIONS:

6.1. Refer to Generac's Installation Guidelines for Stationary Industrial Generators (Document #046622) for additional installation details.

6.2. Pig all gas pipes after installation to remove pipe dope, weld slag and other contaminants that could damage the regulator valve seat and cause pressure creep.

6.3. Install a dirt trap and/or screen before the gas regulator.

6.4. Set the regulator pressure with the generator running at no-load. Measurements are taken at the generator fuel pressure test port on the inside of the frame rail. For units configured for 7"-11" w.c. operating pressure, set the regulator to 11" w.c. no-load running. For units configured for 11-14" w.c. operating pressure, set the regulator to 14" w.c. no-load running. Pressure droop at full-load running will be a combination of regulator droop and pipe friction loss. Proper design will limit the no-load to full-load running pressure drop to no more than 2" w.c. and at no time can the gas pressure fall below the minimum pressure listed on the generator nameplate. Expect the lockup static pressure typically to be higher than the no-load running dynamic pressure.

7. METHODS FOR CORRECTING UNDESIRABLE PERFORMANCE:

7.1. Pressure surging and cycling: Should the regulator experience "hunting" or other unstable operating behavior, an extended vent line may be creating resonant condition on the atmospheric side of the regulator diaphragm. If this is suspected, temporarily disconnect the vent line or remove the cap from the regulator spring case and observe if the unstable behavior stops. Shortening the length or increasing the diameter of the vent line will often correct an instability caused by vent line resonance.

The pipe volume between the service regulator and the generator may be insufficient to decouple the control action of the regulator and the generator's throttle control system. Increase the pipe volume between the regulator and the generator.

Change the response time of the regulator. In some cases, a small adjustment of the regulator spring (up or down 1 w.c.) will be enough to restore stability to the system. If available for the selected regulator, using the next higher spring is another inexpensive and easy to implement option. This will slow the regulator response and can reduce or eliminate the instability. Keep in mind that changing to a higher spring rate will also increase pressure droop and reduce the regulator's maximum flow capacity which limits the applicability of this corrective measure.

CONTINUED

7.2. Low gas pressure under high load: There are several potential causes of low gas pressure under high load.

Pipe runs with excessive friction loss caused by a pipe diameter that is too small for the required gas flow and pipe length and/or a large number of elbows. The only corrective action for this is to increase the pipe diameter between the regulator and the generator or to raise the pressure of the high pressure gas. Avoid this problem by using a gas pipe sizing tool during the design phase.

Insufficient regulator capacity. Confirm the upstream gas main and regulator flow capabilities for a given upstream gas pressure. If the upstream gas pressure is lower than originally anticipated, investigate the possibility adjusting the utility regulator (if present). If increasing upstream gas pressure is not possible, a larger orifice and/or different spring combination may be available for the existing regulator to increase flow and reduce pressure droop. If the previous steps fail to correct the situation, a larger regulator will be required. Avoid this problem by thoroughly reviewing the regulator manufacturer's flowrate tables prior to ordering.

7.3. Excessive transient pressure drop during generator crank cycle or block load application: If the transient pressure drop during a generator crank cycle or block load application is large enough to impact performance, speeding up the regulator response will reduce the transient pressure drop. Avoid this problem by using a direct-acting regulator that is suitable for engine-generator applications. If available for the selected regulator, using a lighter spring will increase the regulator response speed and reduce transient pressure dip. Finally, if a remotely registered regulator is used, increase the pipe diameter of the remote sensing line.

7.4. Pressure creep: Ensure the selected regulator has a lockup or hard-shutoff feature. Pressure creep is almost always caused by contaminants in the pipe system upstream of the regulator. The contaminants either get caught on the regulator valve disk or cause physical damage to the valve disk, making it impossible to achieve a hard shutoff. Avoid this problem by pigging all pipe components prior to installing the regulator and ensure a dirt trap is installed upstream of the regulator.

7.5. Failure to start, run smoothly, or accept 100% load: Barring a mechanical failure on the generator, failure to make 10-second start, run smoothly, or carry full load is almost always caused by an underlying gas supply problem.

8. PROPANE VAPOR AND LIQUID:

8.1. Propane vapor system: This type of system uses the vapors formed above the liquid fuel in the supply tank. The maximum tank liquid capacity is 80% and a minimum of approximately 20% of the tank capacity is required to boil off liquid into the vapor state. Gas pressure and volume requirements for an LPG system at the connection point of the generator are listed on the unit specification sheet. The piping system connecting the outlet of the first stage regulator to the connection point on the second stage regulator must be properly sized to provide the fuel volume required by the unit at 100% load.

The piping system between the outlet of the second stage regulator and the generator connection point must be sized to provide the fuel volume required by the generator at 100% load while also staying within the pressure range noted on the unit specification sheet.

8.2. Tank vaporization rate: In addition to sizing the gas piping system in a similar manner to natural gas, LP-vapor systems must also size the propane storage tanks to ensure a sufficient volume of gas will boil off

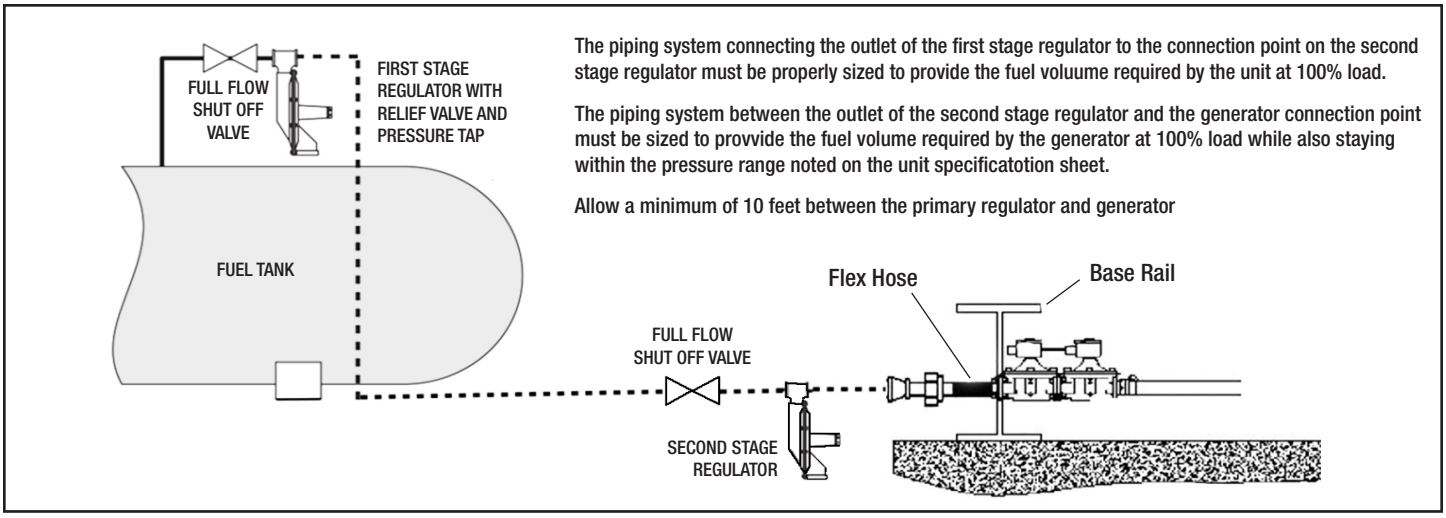

Figure 4: Typical LP vapor withdrawal system.

under a range of environmental conditions and various liquid levels in the tank. Liquid propane absorbs ambient heat from the surrounding environment to boil off liquid into a gas. Low liquid levels in a tank coupled with cold ambient temperatures can result in a condition where the tank boil off rate is insufficient to meet the demands of the generator.

The local propane supplier is often a good resource to help with tank sizing. The Emerson-Fisher LP-Gas Serviceman's Handbook is another valuable resource for sizing propane systems and includes tank vaporization tables.[8] In many cases, the tank volume must be larger (sometimes much larger) than the gas required to achieve a desired runtime. Where practical, buried tanks can improve the vaporization rate by protecting the tank from extremely low ambient air temperatures.

8.3. Liquid propane system: This system delivers propane in a liquid state (LPL) to the connection point on the generator set. Liquid propane systems are used where it is impractical to achieve the required boil off rate from the available fuel tank volume. For the engine to use the LPL fuel, the liquid must be vaporized prior to being delivered to the fuel mixer (carburetor). LPL will vaporize at a temperature of

Max. Intermittent Withdrawal Rate (BTU/HR) Without Tank Frosting* If Lowest Outdoor Temperature (Average for 24-Hours) Reaches . . .

	TANK SIZE (Gallons)			
TEMPERATURE	**150**	**250**	**500**	**1,000**
40°F	214,900	288,100	478,800	852,800
30°F	187,900	251,800	418,600	745,600
20°F	161,800	216,800	360,400	641,900
10°F	148,000	198,400	329,700	587,200
0°F	134,700	180,600	300,100	534,500
-10°F	132,400	177,400	294,800	525,400
-20°F	108,800	145,800	242,300	431,600
-30°F	107,100	143,500	238,600	425,000

* Tank frosting acts as an insulator, reducing the vaporization rate.

Table 3: Above ground AMSE Tank vaporization rate, LP-Gas Serviceman's Handbook.

(-44°F/-42.2°C). The generator set LPL fuel system delivery pressure operates over the range of 58-180 psi (400-1242 kPa), depending on the ambient temperature and liquid level in the storage tank. LPL enters the vaporizer and passes into a "flash" chamber. The pressure drop in this chamber vaporizes the liquid to a gas and is regulated to negative 11"-14" w.c. (2.9-3.5 kPa). Heated engine coolant from the jacket water heater is used to heat the flash chamber of the vaporizer and to prevent the vaporizer from icing.

CONTINUED

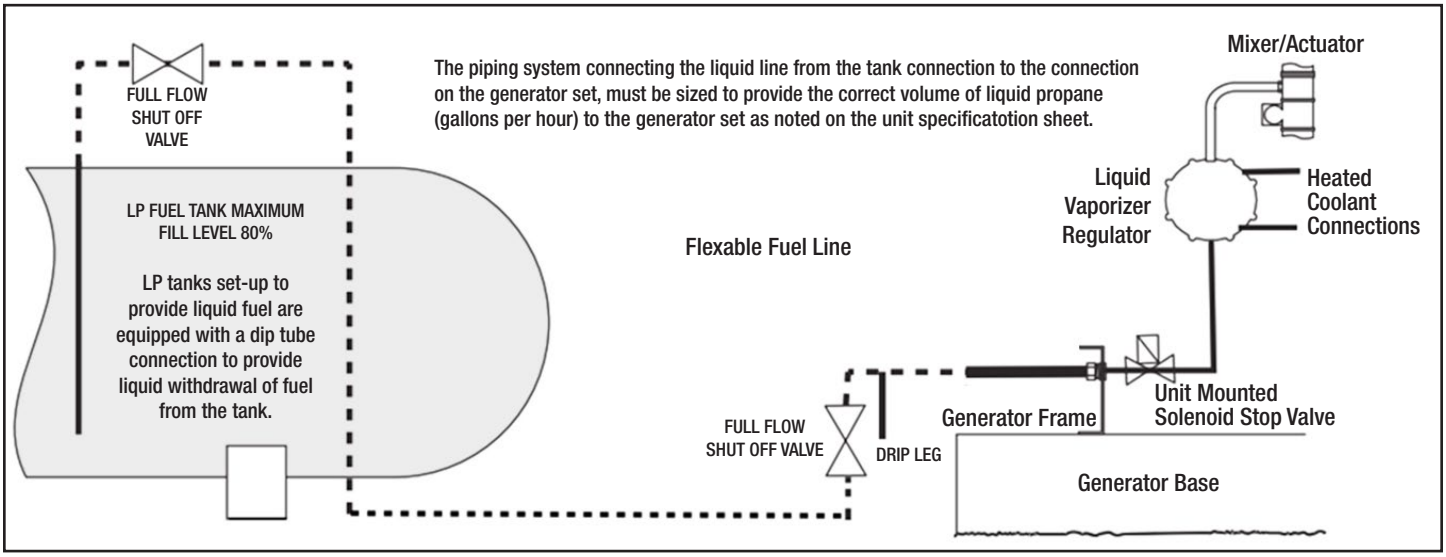

Figure 5: Typical LP liquid withdrawal system.

8.4. Dual fuel, natural gas primary and propane secondary: Some applications use a dual fuel system where the primary source may not be available during a power outage. Dual fuel systems use natural gas as the primary fuel and LPG or LPL withdrawal as the secondary fuel. For dual fuel units, the specific fuel pressure, volume, and pipe sizing requirements for each fuel type must be observed.

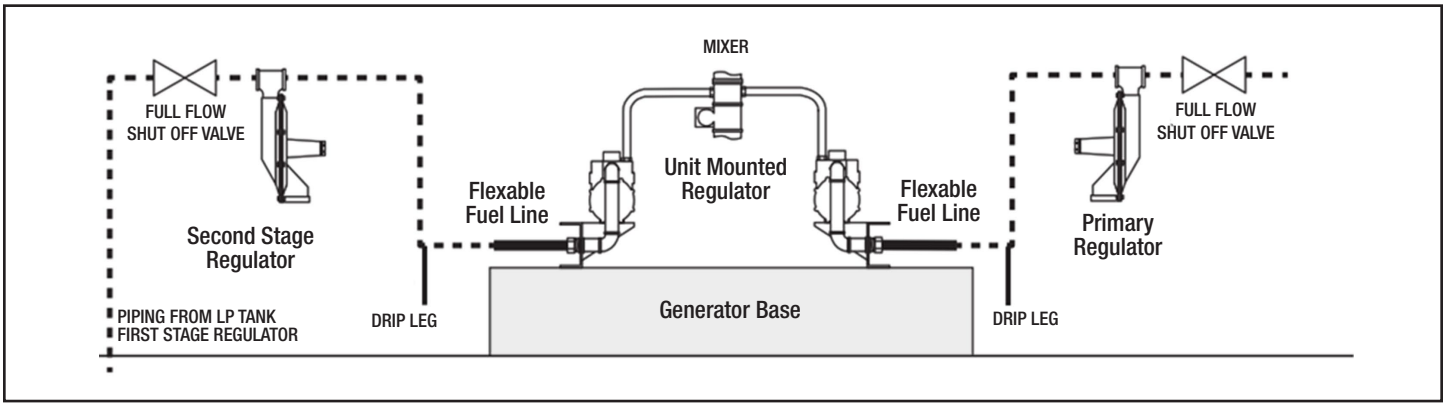

Figure 6: Typical dual-fuel system.

9. ADDITIONAL RESOURCES:

[1] NFPA 37 “Installation and use of Stationary Combustion Engines”
NFPA 54 “National Fuel Gas Code”
NFPA 58 “LP Gas Code”
Free access to view NFPA code documents can be found at:
https://www.nfpa.org/Codes-and-Standards/All-Codes-and-Standards/Free-access.

[2] Data sheets for Generac Industrial gas generator sets:
https://www.generac.com/Industrial/products/gaseous-generators.

[3] A more thorough description of the operational principles and performance attributes of gas regulators can be found in Emerson-Fisher’s Natural Gas Application Guide at:
http://www.emerson.com/en-us/automation/valves-actuators-regulators/regulators.

[4] Causes and Cures of Regulator Instability, Class #6010. William H Earney, Fisher Controls International Inc. 1995.
https://www.scribd.com/document/197653841/Causes-and-Cures-of-Regulator-Instability

[5] Sensus product data sheets: https://sensus.com/products/?utility=gas

[6] The Bernoulli Effect will cause a difference in gas pressure only when gas is flowing. When a remote sensing regulator is used, and the remote sensing point is located in a pipe section that is a larger diameter than the generator fuel inlet, under high-flow conditions it can result in an additional 1”-2” w.c. of pressure difference that cannot be eliminated. https://en.wikipedia.org/wiki/Bernoulli%27s_principle

[7] Power Design Pro is Generac’s web-based generator sizing tool that includes modules for gas supply pipe sizing and exhaust pipe sizing. It can be accessed and used free of charge at:
https://pdp.powerdesignpro.com.

[8] LP-Gas Serviceman’s Handbook, Emerson Fisher.
http://www.squibbtaylor.com/uploaded/lp10servicemaninst.pdf.

Generac Power Systems, Inc.
S45 W29290 Hwy. 59, Waukesha, WI 53189 | 1-888-GENERAC (1-888-436-3722) | 10000046207 10/2020

GENERAC.COM

DOCUMENT 00 41 13
BID FORM – STIPULATED PRICE

To: Gaylord Community Schools
c/o Joe Hart, Business Manager
615 South Elm Street
Gaylord, Michigan 49735

Project: Gaylord Community Schools
Project SF3.8 – 2024 Sinking Fund Projects
Bid Package No. 4
Board Office / Early Childhood Center
Generator & ATS Installation
Project No. 284-20H.6

Date: _____

Submitted by: _____
(full name)

_____
(full address)

Estimator _____
(name and telephone)

Bid Category: _____

1. OFFER

Having examined the Place of The Work and all matters referred to in the Instructions to Bidders and the Contract Documents prepared by Anthony Esson, Architect for the above mentioned project, we, the undersigned, hereby offer to enter into a Contract to perform the Work for the

Stipulated Sum of: $_____(numerical)

$_____dollars
in lawful (written) money of the United States of America.

- We have included the required security deposit as required by the Instruction to Bidders.
- All applicable federal and/or State of Michigan taxes are included in the Bid Sum.
- We have included all allowances as provided in each respective Bid Category.
- We acknowledge that Liquidated Damages will be assessed for our failure to achieve Substantial Completion and/or obtain approval for occupancy from the Michigan Bureau of Construction Codes (where applicable) prior to the dates indicated in the Contract Documents.

2. MANDATORY BID ALTERNATES

We offer the following Alternate Prices for specific portions of the Work as provided in the Contract Documents:

Bid Alternate 1: Replace existing Main Distribution Panel “MD” and Sub-Panel “DPA”.

ADD/DEDUCT $_____.

Bid Alternate 2: Replace/Upgrade existing Gas service in lieu of providing new.

ADD/DEDUCT $_____.

3. ACCEPTANCE

This offer shall be open to acceptance and is irrevocable for sixty (60) days from the bid closing date. If this bid is accepted by the Owner within the time period stated above, we will:

a. Execute the Agreement within five (5) days of receipt of Notice of Award by the Construction Manager.

b. Commence work within three (3) days after written Notice to Proceed by the Construction Manager.

If this bid is accepted within the time stated, and we fail to commence the Work or we fail to provide the required Bond(s), the security deposit shall be forfeited as damages to the Owner by reason of our failure, limited in amount to the lesser of the face value of the security deposit or the difference between this bid and the bid upon which a Contract is signed.

In the event our bid is not accepted within the time stated above, the required security deposit shall be returned to the undersigned, in accordance with the provisions of the Instructions to Bidders; unless a mutually satisfactory arrangement is made for its retention and validity for an extended period of time.

4. CHANGES TO THE WORK

When the Architect establishes that the method of valuation for Changes in the Work will be net cost plus a percentage fee in accordance with General Conditions, our percentage fee will be:

_____ percent (may not to exceed 10%) overhead and profit on the net cost of our own Work;

_____ percent (may not to exceed 10%) on the cost of work done by any Subcontractor.

6. ADDENDA

The following Addenda have been received. The modifications to the Bid Documents noted below have been considered and all costs are included in the Bid Sum.

Addendum # _____ Dated _____

Addendum # _____ Dated _____

7. BID FORM SIGNATURE(S)
The Corporate Seal of

_____
(Bidder - print the full name of firm)
was hereunto affixed in the presence of:

_____
(Authorized signing officer Title)

(Seal)

If the Bid is a joint venture or partnership, add additional forms of execution for each member of the joint venture in the appropriate form or forms as above.

END OF BID FORM - STIPULATED PRICE

DOCUMENT 00 45 01

FAMILIAL DISCLOSURE STATEMENT

The undersigned, as owner or authorized officer of the Bidder, and pursuant to the familial disclosure requirement provided in the advertisement for construction bids, hereby represent and warrant, except as provided below, that no familial relationships exist between the owner(s) or any employee of _____ (the Bidder) and any member of the Board of Education or the Superintendent of Gaylord Community Schools (the School), except as indicated below:

List any Familial Relationships:

BIDDER:

_____

By: _____

Its: _____

State of Michigan)
) SS
County of)

This instrument was acknowledged before me on the _____ day of _____, 200__, by

_____.

_____
, Notary Public

_____, County, Michigan

My Commission Expires: _____

Acting in the County of: _____

END OF FAMILIAL DISCLOSURE STATEMENT

DOCUMENT 00 45 02

IRAN ECONOMIC SANCTIONS ACT COMPLIANCE AFFIDAVIT

Effective April 1, 2013, all Bids and/or Proposals received by public entities in the State of Michigan must comply with the Iran Economic Sanctions Act, Act 517 of 2012. As a condition to compliance with the Act, the following certification must be submitted with the Bid.

The undersigned, as owner or authorized officer of _____ (the Bidder), pursuant to the requirements of the Iran Economic Sanctions Act, Act 517 of 2012, hereby certifies under civil penalty for false certification, that the Bidder is not an "Iran Linked Business", as defined in the Act, and is eligible to submit a Bid.

By: _____

Its: _____

State of Michigan)
) SS
County of)

This instrument was acknowledged before me on the _____ day of _____, 200__, by

_____.

_____
, Notary Public

_____, County, Michigan

My Commission Expires: _____

Acting in the County of: _____

END OF IRAN ECONOMIC SANCTIONS ACT COMPLIANCE AFFIDAVIT

DOCUMENT 00 52 14

AGREEMENT FORM

1.1 SUMMARY

A. Document Includes:
1. Agreement.

B. Related Documents:
1. Document 00 72 14 - General Conditions.

1.2 AGREEMENT

A. The Subcontractor Agreement included in this section (see following Sample agreement) forms the basis of Agreement between the Construction Manager and Trade Contractor.

END OF DOCUMENT

SUBCONTRACT AGREEMENT

Construction Manager:	**Sugar Construction, Inc.** **2968 Venture Drive** **Midland MI 48640**	**SUBCONTRACTOR:** Address:	**Sample Subcontractor**
Phone: **Fax:**	**989 631-4154** **989 631-7012**	Phone: Fax:	
PROJECT:	**Gaylord Schools SF3.8 Projects Bid Pack 4** **Gaylord Community Schools** **615 S. Elm St.** **Gaylord MI 49735**	Email: Attn:	
		Federal ID #:	
SCI JOB #:	**1048**	**CONTRACT DATE:**	**04/18/2025**
CONTRACT #:	**8231**	**Taxable:**	**Yes**

SUBCONTRACT SUM: **$25,000.00 EXACTLY TWENTY-FIVE THOUSAND DOLLARS**

CONTRACT DOCUMENTS:

1. This Subcontract Agreement.
2. As described in Exhibit A.

TIME OF COMPLETION: 08/22/2025

1. THE WORK:

1.1 The Subcontractor represents that it is fully qualified and licensed to perform this Agreement, and acknowledges that, prior to the execution of this Agreement it has (a) by its own independent investigation ascertained (i) the Work required by this Agreement (ii) the conditions involved in performing the Work, and (iii) the obligations of this Agreement and the Contract Documents; and (b) independently verified all information furnished by the Owner, Construction Manager, or others satisfying itself as to the correctness and accuracy of that information. Any failure by Subcontractor to investigate independently and become informed will not relieve the Subcontractor from its responsibilities hereunder nor serve as a basis for an adjustment to the contract value.

1.2 The Subcontractor shall provide all necessary labor, material, equipment, tools, shop drawings, layout, samples, professional services, taxes, permits, fees, licenses, insurances, etc. to perform the Work.

1.3 The Work shall be performed in accordance with all applicable local, state and federal codes, laws and regulations (including OSHA and MIOSHA) and in accordance with the Contract Documents.

1.4 Subcontractor shall keep the Project free and clean of trash and debris attributable to the Work. On twenty-four (24) hours written notice by the Construction Manager, Subcontractor shall remove all trash and debris or be responsible for the cost, plus twenty percent, incurred by Construction Manager to do same.

1.5 The Subcontractor shall furnish a workforce that will work in harmony with all other subcontractors on the Project. The Subcontractor shall not suffer, support or take any action to picket, strike, handbill, engage in sympathy or unfair labor practice strikes, or any work stoppages or otherwise interfere with the Work or the business of the Construction Manager or any of its subcontractors. The Subcontractor shall not suffer its employees to honor or recognize any picket line by any union against the Construction Manager.

1.6 Subcontractor agrees promptly to make good, without cost to the Owner or Construction Manager, any and all defects due to faulty workmanship and/or materials which may appear within the guaranty or warranty period established in the Contract Documents or for one year from Owner's acceptance of the Construction Manager's work, whichever is later.

1.7 Time is of the essence of this Agreement. Subcontractor shall provide sufficient manpower to complete the Work on or before the Completion Date stipulated herein, including working his forces overtime at no cost to the Construction Manager, if deemed necessary by the Construction Manager to meet the Completion Date.

1.8 The Subcontractor shall be bound by the terms of the Specifications, General Conditions and Supplemental Conditions and Addenda in the Contract between the Construction Manager and the Owner, shall conform to and comply with the Drawings and Specifications and Addenda, and shall assume toward the Construction Manager all the obligations and responsibilities that the Construction Manager assumes toward the Owner.

1.9 If the Work is delayed, substantially without fault or responsibility of Subcontractor, the Subcontractor may receive an extension of the Contract Time and an adjustment to the Schedule of Work. Subcontractor expressly understands that its sole and exclusive remedy for delay will be an extension of time for performance of the Work. Written documentation of delays in work must be acepted by Sugar Construction. Without written documentation, short comings in manpower, schedule, etc. will be the responsibilty of the Subcontracor. A subcontractor's ability to not fullfill the contract oblications will result in Sugar Construction fulfilling these obligations at the expense of the subcontractor.

2. PAYMENTS

2.1 Subcontractor shall submit a Subcontractor Application for Progress Payment ("Application for Payment"), completed in full, signed and notarized, to the Construction Manager on or before the 20th day of each month for that portion of the Work completed through the end of the month, less ten percent (10%) retainage, per the attached format. Applications for Payment must be mailed or delivered to Construction Manager; facsimile copies shall not be accepted.

2.2 Construction Manager agrees to pay Subcontractor within thirty (30) days from the end of the month in which the Work was performed and the Application for Payment submitted, or within ten (10) business days following Construction Manager's receipt of payment from the Owner for the Work, whichever is later. It shall be an express condition precedent to Construction Manager's obligations to pay Subcontractor any amount under this Contract that Construction Manager shall have first actually received payment for the Work from the Owner.

2.3 If notification of any claim against Subcontractor is made to Construction Manager, Construction Manager, at its discretion has the right to withhold sufficient funds from any payment due Subcontractor to cover the cost of the claim, pending final settlement. If Subcontractor fails to settle any claim, Construction Manager shall have the right to pay the Subcontractor's sub-subcontractors or suppliers and deduct those payments from the Subcontract Sum. Any expenses incurred by the Construction Manager including but not limited to costs associated with bonding of liens, attorneys' fees, court costs and Construction Manager's personnel expenses incurred in order to resolve claims shall be deducted from the Subcontract Sum. In the event that the cost to resolve said claims is greater than the unpaid amounts and retainage, Subcontractor shall pay those amounts to Construction Manager upon receipt of a written statement from the Construction Manager. If such amounts are not paid within fifteen (15) days of receipt of statement, Subcontractor agrees to pay Construction Manager interest on all such amounts at a rate of twelve percent (12%) per annum and Subcontractor agrees to pay all costs of collection, including but not limited to court costs and attorney's fees.

2.4 Final payment shall be paid Subcontractor upon Construction Manager's receipt of:

a. Final payment by Owner.
b. Subcontractor Application for Final Payment, as per the attached format, completed in full, signed & notarized.
c. Final lien waiver from Subcontractor; and
d. Written statement of guaranty of work, warranties, manuals, as-builts and any other required documents from Subcontractor.

3. CHANGES IN WORK

3.1 Subcontractor expressly agrees that no changes will be made, nor extra work performed, nor changes made in the quality or quantity of materials furnished, nor additional compensation paid, unless such matter is previously authorized by the Project Manager, in the form of a written change order.

3.2 If the written change order entitles the Subcontractor to additional compensation, the change order must include written documentation from any sub-subcontractors or suppliers that are entitled to compensation pursuant to or as a result of the written change order.

3.3 Any work that is deemed a change in value for the Subcontract Agreement, and which would delay Subcontractor or Construction Manager's scheduled completion, and for which the parties do not agree as to the value, shall upon twenty four (24) hours written notice, be diligently prosecuted by the Subcontractor according to the following guidelines. The Construction Manager shall determine an undisputed amount for the change order work, which shall be billed in accordance with the Payment terms herein. The disputed amount shall be submitted to the owner or architect for their ruling as to the value of the work. The decision as to the value of the work shall be based on the Owner or architect's ruling, and this amount shall thereby be the agreed upon value of the work.

3.4 Subcontractor will give Cosntruction Manager written notice of any claims relating to Subcontractor's performance under this Agreement, including claims for which Construction Manager or Owner might be liable, within three (3) calendar days of the occurrence of the condition or event which forms the basis of such claim. Failure to provide such written notice within the three-day period constitutes a waiver of any such claim.

4. INSURANCE

4.1 The Subcontractor shall procure and maintain at the Subcontractor's own expense, during the entire contract time, Liability Insurance as hereinafter specified:

a. Business Automobile Liability shall be provided for a Combined Single Limit of at least $1,000,000 for Bodily Injury and Property Damage. Coverage shall include owned, leased, hired and non-owned vehicles. Construction Manager shall be named as Additional Insured.
b. Workers Compensation Insurance for the protection of all Subcontractor's employees including partners and individual owners working on or in connection with the Project.
c. Commercial General Liability shall be provided for a Combined Single Limit of at least $1,000,000 for each occurrence, $1,000,000 Personal Injury and Advertising Liability, $2,000,000 Products and Completed Operations aggregate and $2,000,000 general aggregate. The policy shall contain no restrictions for contractual liability and xcu (explosion, collapse and underground). Construction Manager shall be named as additional insured, per form CG2010 1185 or equivalent. Subcontractor shall maintain Products and Completed Operations insurance and shall name Construction Manager as additional insured for at least two (2) years from the date of final payment. Subcontractor's insurance shall be primary and non-contributing so that the Construction Manager's policy will not respond until the limits under the Subcontractor's policy are exhausted.
d. Commercial Umbrella Liability shall be provided for at least $1,000,000 and shall be as broad as the primary General Liability and Automobile.

4.2 Certificates of Insurance, including a copy of the additional insured endorsement, acceptable to Construction Manager must be provided prior to Subcontractor commencing any work or ordering any materials. Renewal certificates must be provided no less then 14 days prior to expiration. All insurance carriers named in the Subcontractor's certificate of insurance shall have an A.M. rating of A- or better. The Certificates must also contain a provision that coverage afforded under the policies will not be canceled unless at least thirty (30) days prior written notice has been given to Construction Manager. Construction Manager shall not make any payment to Subcontractor until proper evidence of insurance is received. If Subcontractor performs any portion or all of the Work without the required insurances, Construction Manager shall deduct the greater of twenty five percent (25%) broken down as follows: 10% for General Liability, 10% for Workers Compensation, 3% for Automobile Liability and 2% for Umbrella coverage of the Subcontract Sum, or the value of the insurance premium as solely determined by Construction Manager's insurance carrier.

4.3 Waiver of Subrogation: Subcontractor waives all rights against Construction Manager, Owner and architect and their agents, officers, Directors and employees for recovery of damages caused by fire or other causes of loss to the extent such damages are covered by any insurance provided under this Subcontract Agreement.

5. INDEMNIFICATION

5.1 The Subcontractor shall indemnify and hold harmless Construction Manager and its agents and employees from and against any and all liability, suits, actions, claims, damages, losses, judgments, settlements, costs and expenses, including attorney's fees and litigation costs (including fees and expenses of consultants and/or expert witnesses), arising out of, related to or resulting from the Subcontractor's performance of the Work, provided that such suit, action, claim, damage, loss, or expense is attributable to bodily injury, sickness, disease or death, or to injury to or destruction of tangible property including the loss of use therefrom, and is caused in whole or in part by any negligent or willful act or omission of the Subcontractor, its sub-subcontractors, suppliers, anyone directly or indirectly employed by Subcontractor or anyone for whose acts Subcontractor may be liable.

5.2 In any or all claims against the Construction Manager, or any of its agents or employees, by any employee of the Subcontractor, anyone directly or indirectly employed by Subcontractor, or anyone for whose acts any of them may be liable, the indemnification obligation shall not be limited in any way by any limitation on the amount or type of damages, compensation, of benefits payable by or for the Subcontractor under workers compensation acts, disability benefits acts, or any other employee benefit acts.

5.3 If Construction Manager is assessed liquidated damages or other damages for delay on the Project, the Construction Manager may assess delay damages against Subcontractor according to Subcontractor's responsibility for the delay. In addition, Subcontractor shall be liable to Construction Manager for actual damages including, without limitation, reasonable attorney's fees caused by Subcontractor's delay.

5.4 Subcontractor shall at all times comply with all safety regulations as set forth by any state regulatory agency or any federal regulatory agency and shall indemnify Construction Manager against all claims and/or penalties arising from inspections by these agencies.

6. TERMINATION AND SUPPLEMENTING FORCES

6.1 The failure by Subcontractor to supply a sufficient number of skilled workmen, or to supply the specified or required materials, or sufficient and proper equipment, to prosecute the Work in a manner tocomply with the Completion Date, to pay in a timely manner for third party materials, equipment and labor, or to perform any covenant contained in the Contract Documents, shall constitute a default of the Subcontractor, and Construction Manager may, at its option, and after forty-eight (48) hours of written notice of said default to Subcontractor, terminate this Agreement.

6.2 The Construction Manager also has the right, with forty- eight (48) hours written notice to the Subcontractor, to hire third party forces to help to complete the work if the Subcontractor is proving unable to meet the scheduled Completion Date. All such supplemental charges incurred shall be deducted from the Subcontract Sum. In the event that the cost to supplement forces is greater than the unpaid amounts and retainage, Subcontractor shall pay those amounts to Construction Manager upon receipt of a written statement from the Construction Manager. If such amounts are not paid within fifteen (15) days of receipt of statement, Subcontractor agrees to pay Construction Manager interest on all such amounts at a rate of twelve percent (12%) per annum and Subcontractor agrees to pay all costs of collection, including but not limited to court costs and attorney's fees.

6.3 In the event of default by Subcontractor and subsequent termination of Subcontractor by Construction Manager, Construction Manager shall complete the Work through its own or third party forces, and shall deduct the costs thereof from the unpaid amounts and retainage of this Subcontract. In the event the cost to complete the Work is greater than the unpaid amounts and retainage, Subcontractor shall pay those amounts to Construction Manager upon receipt of a written statement from the Coonstruction Manager. If such amounts are not paid by Subcontractor within fifteen (15) days of receipt of statement, Subcontractor agrees to pay Construction Manager interest on all such amounts at a rate of twelve percent (12%) per annum, and Subcontractor further agrees to pay any and all costs of collection, including but not limited to court costs and attorney's fees.

7. DISPUTES

7.1 The interpretation, performance and enforcement of this Agreement will be governed by the laws of the State of Michigan and or governing body that has jurisdiction over the project work site.

7.2 Any and all claims, disputes and other matters in questions arising out of or relating to this Agreement, or breach thereof, will be resolved, at Construction Manager's option (1) by arbitration in accordance with the Construction Industry Arbitration Rules of the American Arbitration Association in the County of Oakland, Michigan; or (2) in the Circuit Court of Oakland County, Michigan or such other venue as may be agreed upon by Construction Manager. Construction Manager and Subcontractor hereby waive their right to demand a jury trial. In the event that Construction Manager prevails in such arbitration or litigation, Subcontractor shall pay the Construction Manager the costs and expenses, including such reasonable attorney's fees and costs, including expert witness fees and expenses, incurred by Construction Manager in such arbitration or litigation.

7.3 Subcontractor shall turn the Work over to Construction Manager in good condition, free and clear of all claims, encumbrances and liens growing out of the performance of this Agreement. In the event a mechanic's or materialman's lien is filed by reason of work done or materials furnished to or by the Subcontractor or any of its sub-subcontractors, Subcontractor will, upon demand by Owner or Construction Manager and at Subcontractor's expense, cause such lien to be released of record, by bonding or otherwise. If Subcontractor fails to do so within a reasonable time after demand, Owner or Construction Manager may take such action as shall be necessary to remove such lien of record and if either of them do so, Subcontractor will, upon demand, reimburse them for all costs incurred, including, without limitation, attorney's fees.

8. MISCELLANEOUS PROVISIONS

8.1 Any amounts owed to Subcontractor under this Subcontract Agreement may be withheld by Construction Manager and applied to any actual or potential amounts or sums that are, or may in the future be owed by Subcontractor to Construction Manager on this or any other project, job, matter or contract between Construction Manager and Subcontractor including, without limitation, legal expenses and costs associated therewith.

8.2 Within ten (10) days following any request by Construction Manager, Subcontractor will furnish Construction Manager with a list of all subcontractors and material suppliers who have performed labor or supplied materials to Construction Manager as part of the Work, together with a statement of current balance owed to or claimed by each sub-subcontractor or supplier.

8.3 The partial or complete invalidity of any one or more provisions of this Agreement shall not affect the validity or continuing force and effect of any other provision. The failure of either party to insist, in any or more instances, upon the performance of any of the terms, covenants, or conditions of this Agreement, or to exercise any right herein, shall not be construed as a waiver or relinquishment of such term, covenant, condition or right as respect to further performance.

8.4 This Agreement and the Contract Documents constitute the entire agreement between parties and may not be amended, superseded or otherwise affected, except by an agreement in writing signed by both parties. This subcontract or the amounts due hereunder cannot be sublet or assigned in whole or in part without prior written approval from the Construction Manager.

8.5 The individual signing below has read and understands all of the terms described herein, and has the capacity to bind the Subcontractor.

8.6 No Asbestos containing building materials (ACBM) shall be used in the construction of this project.

Initials

8.6 LIQUIDATED DAMAGES: Recognizing that time is of the essence of this Agreement and that Owner will suffer financial loss if the Work is not Substantially Complete and approved for occupancy by the Michigan Bureau of Construction Codes (if applicable) within the time limits established herein, plus any extensions of time as allowed under the General Conditions, and also recognizing the delays, expense and difficulties involved in proving in a legal proceeding the actual loss suffered by the Owner if the Work is not Substantially Complete on time, instead of requiring any such proof, The Construction Manager and Contractor agree that as liquidated damages for delay (but not as penalty) Contractor will pay The Construction Manager (to be forwarded to the Owner)One Thousand Dollars ($ 1,000.00) for each day that expires after the date of Substantial Completion established herein until the Work is Substantially Complete and approved for occupancy by the Michigan Bureau of Construction Codes (if applicable). Liquidated damages charges shall be deducted from the Contractor's progress payments or final payment as applicable. The Owner reserves the right to demand legal proceedings in the event that the actual loss exceeds the damages provided for herein.

8-7 In addition, Contractor shall be responsible for all Architectural costs incurred by the Construction Manager after the established Final Completion date (thirty days after actual Substantial Completion date) resulting from Contractor's failure to properly complete the work. Any such costs shall be deducted from the Contractors progress payment or final payment as applicable.

This Agreement is entered into as of the day and year first written above, labeled as the contract date.

CONSTRUCTION MANAGER

Sugar Construction, Inc.

BY: _____

NAME: Jerry A Brown

TITLE: Project Manager

DATE: _____

SUBCONTRACTOR

Sample Subcontractor

BY: _____

NAME: _____

TITLE: _____

DATE: _____

EXHIBIT "A"

Pursuant to the terms and conditions stated below, which are part of this agreement, the Subcontractor shall furnish all labor, materials, tools equipment, hoisting, scaffolding, clean-up and services necessary for the satisfactory completion of all work as described in the contract specifications as follows:

Scope of Work: Furnish labor, materials and equipment to complete all work associated with Bid Category 4.0 Masonry per plans and specifications including Addendums.

Bidding Addenda / Bulletins **See Exhibit B for Addendums**

And as shown on the drawings, including applicable addenda, accepted alternates, and all related work, and Subcontractor shall pay the government taxes, sales taxes, and use taxes as applicable. Without limiting the above scope, the following items of work are part of this Sub-Contract Agreement.

Specifications Dated: _____ Drawings Dated: _____

Initials _____

DOCUMENT 00 72 14

GENERAL CONDITIONS

1.1 SUMMARY

A. Document Includes:
1. General Conditions.

B. Related Documents:
1. Document 00 52 14 - Agreement Form.

1.2 GENERAL CONDITIONS

A. AIA Document A201-2007 General Conditions of the Contract for Construction as modified, included herein, is the General Conditions of the Contract.

END OF DOCUMENT

AIA® Document A201® – 2007

General Conditions of the Contract for Construction

for the following PROJECT:
(Name and location or address)
Gaylord Community Schools
Sinking Fund Projects on a Project-by-Project basis or other projects as authorized by the Owner

THE OWNER:
(Name, legal status and address)
Gaylord Community Schools
615 S. Elm Avenue
Gaylord, Michigan 48735

This document has important legal consequences. Consultation with an attorney is encouraged with respect to its completion or modification.

THE ARCHITECT:
(Name, legal status and address)
Anthony Esson, Architect, PLLC
2111 Forester Drive
Frederic, Michigan 49733
(989) 732-0585

THE CONSTRUCTION MANAGER:
(Name, legal status and address)

Sugar Construction Inc.
2968 Venture DriveMidland, Michigan 48640(989) 631-5154The term "Contractor" shall also mean the Construction Manager, as that term is defined in the Contract.

TABLE OF ARTICLES

1 GENERAL PROVISIONS

2 OWNER

3 CONTRACTOR

4 ARCHITECT

5 SUBCONTRACTORS

6 CONSTRUCTION BY OWNER OR BY SEPARATE CONTRACTORS

7 CHANGES IN THE WORK

8 TIME

9 PAYMENTS AND COMPLETION

10 PROTECTION OF PERSONS AND PROPERTY

AIA Document A201® – 2007. Copyright © 1911, 1915, 1918, 1925, 1937, 1951, 1958, 1961, 1963, 1966, 1970, 1976, 1987, 1997 and 2007 by The American Institute of Architects. All rights reserved. The "American Institute of Architects," "AIA," the AIA Logo, "A201," and "AIA Contract Documents" are registered trademarks and may not be used without permission. This document was produced by AIA software at 09:39:13 ET on 09/22/2020 under Order No.8752807719 which expires on 09/14/2021, is not for resale, is licensed for one-time use only, and may only be used in accordance with the AIA Contract Documents® Terms of Service. To report copyright violations, e-mail copyright@aia.org.
User Notes: (1516648771)

11 INSURANCE AND BONDS

12 UNCOVERING AND CORRECTION OF WORK

13 MISCELLANEOUS PROVISIONS

14 TERMINATION OR SUSPENSION OF THE CONTRACT

15 CLAIMS AND DISPUTES

AIA Document A201® – 2007. Copyright © 1911, 1915, 1918, 1925, 1937, 1951, 1958, 1961, 1963, 1966, 1970, 1976, 1987, 1997 and 2007 by The American Institute of Architects. All rights reserved. The "American Institute of Architects," "AIA," the AIA Logo, "A201," and "AIA Contract Documents" are registered trademarks and may not be used without permission. This document was produced by AIA software at 09:39:13 ET on 09/22/2020 under Order No.8752807719 which expires on 09/14/2021, is not for resale, is licensed for one-time use only, and may only be used in accordance with the AIA Contract Documents® Terms of Service. To report copyright violations, e-mail copyright@aia.org.
User Notes: (1516648771)

INDEX

~~(Topics and numbers in bold are section headings.)~~
(Numbers and Topics in Bold are Section Headings)

Acceptance of Nonconforming Work
9.6.6, 9.9.3, **12.3**
Acceptance of Work
9.6.6, 9.8.2, 9.9.3, 9.10.1, 9.10.3, 12.3
Access to Work
3.16, 6.2.1, 12.1
Accident Prevention
10
Acts and Omissions
3.2, 3.3.2, 3.12.8, 3.18, 4.2.3, 8.3.1, 9.5.1, 10.2.5, 10.2.8, 13.4.2, ~~13.7,~~ 13.7.1, 14.1, 15.2
Addenda
1.1.1, ~~3.11~~3.11.1
Additional Costs, Claims for
3.7.4, 3.7.5, 6.1.1, 7.3.7.5, 10.3, 15.1.4
Additional Inspections and Testing
9.4.2, 9.8.3, 12.2.1, **13.5**
Additional Insured
11.1.4
Additional Time, Claims for
3.2.4, 3.7.4, 3.7.5, 3.10.2, 8.3.2, **15.1.5**
Administration of the Contract
3.1.3, **4.2**, 9.4, 9.5
Advertisement or Invitation to Bid
1.1.1
Aesthetic Effect
4.2.13
Allowances
3.8, 7.3.8
All-risk Insurance
11.3.1, 11.3.1.1
Applications for Payment
4.2.5, 7.3.9, 9.2, **9.3**, 9.4, 9.5.1, 9.6.3, ~~9.7,~~ 9.7.1, 9.10, 11.1.3
Approvals
2.1.1, 2.2.2, 2.4, 3.1.3, 3.10.2, 3.12.8, 3.12.9, 3.12.10, 4.2.7, 9.3.2, 13.5.1
Arbitration
8.3.1, 11.3.10, ~~13.1,~~ 13.1.1, 15.3.2, **15.4**
ARCHITECT
4
Architect, Definition of
4.1.1
Architect, Extent of Authority
~~2.4,~~ 2.4.1, 3.12.7, 4.1, 4.2, 5.2, ~~6.3,~~ 6.3.1, 7.1.2, 7.3.7, 7.4, ~~9.2,~~ 9.2.1, 9.3.1, 9.4, 9.5, 9.6.3, 9.8, 9.10.1, 9.10.3, 12.1, 12.2.1, 13.5.1, 13.5.2, 14.2.2, 14.2.4, 15.1.3, 15.2.1
Architect, Limitations of Authority and Responsibility
2.1.1, 3.12.4, 3.12.8, 3.12.10, 4.1.2, 4.2.1, 4.2.2, 4.2.3, 4.2.6, 4.2.7, 4.2.10, 4.2.12, 4.2.13, 5.2.1, ~~7.4,~~ 7.4.1, 9.4.2, 9.5.3, 9.6.4, 15.1.3, 15.2
Architect's Additional Services and Expenses
~~2.4,~~ 2.4.1, 11.3.1.1, 12.2.1, 13.5.2, 13.5.3, 14.2.4
Architect's Administration of the Contract
3.1.3, 4.2, 3.7.4, 15.2, 9.4.1, 9.5
Architect's Approvals
~~2.4, 3.1.3, 3.5,~~ 2.4.1, 3.1.3, 3.5.1, 3.10.2, 4.2.7
Architect's Authority to Reject Work
~~3.5,~~ 3.5.1, 4.2.6, 12.1.2, 12.2.1
Architect's Copyright
1.1.7, 1.5
Architect's Decisions
3.7.4, 4.2.6, 4.2.7, 4.2.11, 4.2.12, 4.2.13, 4.2.14, ~~6.3,~~ 6.3.1, 7.3.7, 7.3.9, 8.1.3, 8.3.1, ~~9.2,~~ 9.2.1, 9.4.1, 9.5, 9.8.4, 9.9.1, 13.5.2, 15.2, 15.3
Architect's Inspections
3.7.4, 4.2.2, 4.2.9, 9.4.2, 9.8.3, 9.9.2, 9.10.1, 13.5
Architect's Instructions
3.2.4, 3.3.1, 4.2.6, 4.2.7, 13.5.2
Architect's Interpretations
4.2.11, 4.2.12
Architect's Project Representative
4.2.10
Architect's Relationship with Contractor
1.1.2, 1.5, 3.1.3, 3.2.2, 3.2.3, 3.2.4, 3.3.1, 3.4.2, ~~3.5,~~ 3.5.1, 3.7.4, 3.7.5, 3.9.2, 3.9.3, 3.10, 3.11, 3.12, 3.16, 3.18, 4.1.2, 4.1.3, 4.2, 5.2, 6.2.2, 7, 8.3.1, 9.2, 9.3, 9.4, 9.5, 9.7, 9.8, 9.9, 10.2.6, 10.3, 11.3.7, 12, 13.4.2, 13.5, 15.2
Architect's Relationship with Subcontractors
1.1.2, 4.2.3, 4.2.4, 4.2.6, 9.6.3, 9.6.4, 11.3.7
Architect's Representations
9.4.2, 9.5.1, 9.10.1
Architect's Site Visits
3.7.4, 4.2.2, 4.2.9, 9.4.2, 9.5.1, 9.9.2, 9.10.1, 13.5
Asbestos
10.3.1
Attorneys' Fees
3.18.1, 9.10.2, 10.3.3
Award of Separate Contracts
6.1.1, 6.1.2
Award of Subcontracts and Other Contracts for Portions of the Work
5.2
Basic Definitions
1.1
Bidding Requirements
1.1.1, 5.2.1, 11.4.1
Binding Dispute Resolution
~~9.7,~~ 9.7.1, 11.3.9, 11.3.10, ~~13.1,~~ 13.1.1, 15.2.5, 15.2.6.1, 15.3.1, 15.3.2, 15.4.1
Boiler and Machinery Insurance
11.3.2

AIA Document A201® – 2007. Copyright © 1911, 1915, 1918, 1925, 1937, 1951, 1958, 1961, 1963, 1966, 1970, 1976, 1987, 1997 and 2007 by The American Institute of Architects. All rights reserved. The "American Institute of Architects," "AIA," the AIA Logo, "A201," and "AIA Contract Documents" are registered trademarks and may not be used without permission. This document was produced by AIA software at 09:39:13 ET on 09/22/2020 under Order No.8752807719 which expires on 09/14/2021, is not for resale, is licensed for one-time use only, and may only be used in accordance with the AIA Contract Documents® Terms of Service. To report copyright violations, e-mail copyright@aia.org.
User Notes:
(1516648771)

Bonds, Lien
7.3.7.4, 9.10.2, 9.10.3
Bonds, Performance, and Payment
7.3.7.4, 9.6.7, 9.10.3, 11.3.9, **11.4**
Building Permit
3.7.1
Capitalization
1.3
Certificate of Substantial Completion
9.8.3, 9.8.4, 9.8.5
Certificates for Payment
4.2.1, 4.2.5, 4.2.9, 9.3.3, **9.4**, 9.5, 9.6.1, 9.6.6, ~~9.7,~~ 9.7.1, 9.10.1, 9.10.3, 14.1.1.3, 14.2.4, 15.1.3
Certificates of Inspection, Testing or Approval
13.5.4
Certificates of Insurance
9.10.2, 11.1.3
Change Orders
1.1.1, ~~2.4,~~ 2.4.1, 3.4.2, 3.7.4, 3.8.2.3, ~~3.11,~~ 3.11.1, 3.12.8, 4.2.8, 5.2.3, 7.1.2, 7.1.3, **7.2**, 7.3.2, 7.3.6, 7.3.9, 7.3.10, 8.3.1, 9.3.1.1, 9.10.3, 10.3.2, 11.3.1.2, 11.3.4, 11.3.9, 12.1.2, 15.1.3
Change Orders, Definition of
7.2.1
CHANGES IN THE WORK
2.2.1, 3.11, 4.2.8, **7**, 7.2.1, 7.3.1, 7.4, 7.4.1, 8.3.1, 9.3.1.1, 11.3.9
Claims, Definition of
15.1.1
CLAIMS AND DISPUTES
3.2.4, 6.1.1, ~~6.3,~~ 6.3.1, 7.3.9, 9.3.3, 9.10.4, 10.3.3, **15**, 15.4
Claims and Timely Assertion of Claims
15.4.1
Claims for Additional Cost
3.2.4, 3.7.4, 6.1.1, 7.3.9, 10.3.2, **15.1.4**
Claims for Additional Time
3.2.4, ~~3.7.4, 6.1.1,~~ 3.7.46.1.1, 8.3.2, 10.3.2, **15.1.5**
Concealed or Unknown Conditions, Claims for
3.7.4
Claims for Damages
3.2.4, 3.18, 6.1.1, 8.3.3, 9.5.1, 9.6.7, 10.3.3, 11.1.1, 11.3.5, 11.3.7, 14.1.3, 14.2.4, 15.1.6
Claims Subject to Arbitration
15.3.1, 15.4.1
Cleaning Up
3.15, 6.3
Commencement of the Work, Conditions Relating to
2.2.1, 3.2.2, 3.4.1, 3.7.1, 3.10.1, 3.12.6, 5.2.1, 5.2.3, 6.2.2, 8.1.2, 8.2.2, 8.3.1, 11.1, 11.3.1, 11.3.6, 11.4.1, 15.1.4
Commencement of the Work, Definition of
8.1.2
Communications Facilitating Contract Administration
3.9.1, **4.2.4**
Completion, Conditions Relating to
3.4.1, 3.11, 3.15, 4.2.2, 4.2.9, 8.2, 9.4.2, 9.8, 9.9.1, 9.10, 12.2, 13.7, 14.1.2
COMPLETION, PAYMENTS AND
9
Completion, Substantial
4.2.9, 8.1.1, 8.1.3, 8.2.3, 9.4.2, 9.8, 9.9.1, 9.10.3, 12.2, 13.7
Compliance with Laws
~~1.6,~~ 1.6.1, 3.2.3, 3.6, 3.7, 3.12.10, 3.13, 4.1.1, 9.6.4, 10.2.2, 11.1, 11.3, 13.1, 13.4, 13.5.1, 13.5.2, 13.6, 14.1.1, 14.2.1.3, 15.2.8, 15.4.2, 15.4.3
Concealed or Unknown Conditions
3.7.4, 4.2.8, 8.3.1, 10.3
Conditions of the Contract
1.1.1, 6.1.1, 6.1.4
Consent, Written
3.4.2, 3.7.4, 3.12.8, 3.14.2, 4.1.2, 9.3.2, 9.8.5, 9.9.1, 9.10.2, 9.10.3, 11.3.1, 13.2, 13.4.2, 15.4.4.2
Consolidation or Joinder
15.4.4
CONSTRUCTION BY OWNER OR BY SEPARATE CONTRACTORS
1.1.4, **6**
Construction Change Directive, Definition of
7.3.1
Construction Change Directives
1.1.1, 3.4.2, 3.12.8, 4.2.8, 7.1.1, 7.1.2, 7.1.3, **7.3**, 9.3.1.1
Construction Schedules, Contractor's
3.10, 3.12.1, 3.12.2, 6.1.3, 15.1.5.2
Contingent Assignment of Subcontracts
5.4, 14.2.2.2
Continuing Contract Performance
15.1.3
Contract, Definition of
1.1.2
CONTRACT, TERMINATION OR SUSPENSION OF THE
5.4.1.1, 11.3.9, **14**
Contract Administration
3.1.3, 4, 9.4, 9.5
Contract Award and Execution, Conditions Relating to
3.7.1, 3.10, 5.2, 6.1, 11.1.3, 11.3.6, 11.4.1
Contract Documents, The
1.1.1
Contract Documents, Copies Furnished and Use of
1.5.2, 2.2.5, 5.3
Contract Documents, Definition of
1.1.1
Contract Sum
3.7.4, 3.8, 5.2.3, 7.2, 7.3, 7.4, **9.1**, 9.4.2, 9.5.1.4, 9.6.7, 9.7, 10.3.2, 11.3.1, 14.2.4, 14.3.2, 15.1.4, 15.2.5
Contract Sum, Definition of
9.1

AIA Document A201® – 2007. Copyright © 1911, 1915, 1918, 1925, 1937, 1951, 1958, 1961, 1963, 1966, 1970, 1976, 1987, 1997 and 2007 by The American Institute of Architects. All rights reserved. The "American Institute of Architects," "AIA," the AIA Logo, "A201," and "AIA Contract Documents" are registered trademarks and may not be used without permission. This document was produced by AIA software at 09:39:13 ET on 09/22/2020 under Order No.8752807719 which expires on 09/14/2021, is not for resale, is licensed for one-time use only, and may only be used in accordance with the AIA Contract Documents® Terms of Service. To report copyright violations, e-mail copyright@aia.org.
User Notes: (1516648771)

Contract Time
3.7.4, 3.7.5, 3.10.2, 5.2.3, 7.2.1.3, 7.3.1, 7.3.5, 7.4, 8.1.1, 8.2.1, 8.3.1, 9.5.1, ~~9.7,~~ 9.7.1, 10.3.2, 12.1.1, 14.3.2, 15.1.5.1, 15.2.5
Contract Time, Definition of
8.1.1
CONTRACTOR
3
Contractor, Definition of
3.1, 6.1.2
Contractor's Construction Schedules
3.10, 3.12.1, 3.12.2, 6.1.3, 15.1.5.2
Contractor's Employees
3.3.2, 3.4.3, 3.8.1, 3.9, 3.18.2, 4.2.3, 4.2.6, 10.2, 10.3, 11.1.1, 11.3.7, 14.1, ~~14.2.1.1~~14.2.1.1,
Contractor's Liability Insurance
11.1
Contractor's Relationship with Separate Contractors and Owner's Forces
3.12.5, 3.14.2, 4.2.4, 6, 11.3.7, 12.1.2, 12.2.4
Contractor's Relationship with Subcontractors
1.2.2, 3.3.2, 3.18.1, 3.18.2, 5, 9.6.2, 9.6.7, 9.10.2, 11.3.1.2, 11.3.7, 11.3.8
Contractor's Relationship with the Architect
1.1.2, 1.5, 3.1.3, 3.2.2, 3.2.3, 3.2.4, 3.3.1, 3.4.2, ~~3.5,~~ 3.5.1, 3.7.4, 3.10, 3.11, 3.12, 3.16, 3.18, 4.1.3, 4.2, 5.2, 6.2.2, 7, 8.3.1, 9.2, 9.3, 9.4, 9.5, 9.7, 9.8, 9.9, 10.2.6, 10.3, 11.3.7, 12, 13.5, 15.1.2, 15.2.1
Contractor's Representations
3.2.1, 3.2.2, ~~3.5,~~ 3.5.1, 3.12.6, 6.2.2, 8.2.1, 9.3.3, 9.8.2
Contractor's Responsibility for Those Performing the Work
3.3.2, 3.18, ~~5.3,~~ 5.3.1, 6.1.3, 6.2, 9.5.1, 10.2.8
Contractor's Review of Contract Documents
3.2
Contractor's Right to Stop the Work
9.7
Contractor's Right to Terminate the Contract
14.1, 15.1.6
Contractor's Submittals
3.10, 3.11, 3.12.4, 4.2.7, 5.2.1, 5.2.3, 9.2, 9.3, 9.8.2, 9.8.3, 9.9.1, 9.10.2, 9.10.3, 11.1.3, 11.4.2
Contractor's Superintendent
3.9, 10.2.6
Contractor's Supervision and Construction Procedures
1.2.2, 3.3, 3.4, 3.12.10, 4.2.2, 4.2.7, 6.1.3, 6.2.4, 7.1.3, 7.3.5, 7.3.7, 8.2, 10, 12, 14, 15.1.3
Contractual Liability Insurance
11.1.1.8, 11.2
Coordination and Correlation
1.2, 3.2.1, 3.3.1, 3.10, 3.12.6, 6.1.3, 6.2.1
Copies Furnished of Drawings and Specifications
1.5, 2.2.5, 3.11
Copyrights
1.5, **3.17**
Correction of Work
2.3, 2.4, 3.7.3, 9.4.2, 9.8.2, 9.8.3, 9.9.1, 12.1.2, **12.2**
Correlation and Intent of the Contract Documents
1.2
Cost, Definition of
7.3.7
Costs
~~2.4,~~ 2.4.1, 3.2.4, 3.7.3, 3.8.2, 3.15.2, 5.4.2, 6.1.1, 6.2.3, 7.3.3.3, 7.3.7, 7.3.8, 7.3.9, 9.10.2, 10.3.2, 10.3.6, 11.3, 12.1.2, 12.2.1, 12.2.4, 13.5, 14
Cutting and Patching
3.14, 6.2.5
Damage to Construction of Owner or Separate Contractors
3.14.2, 6.2.4, 10.2.1.2, 10.2.5, 10.4, 11.1.1, 11.3, 12.2.4
Damage to the Work
3.14.2, 9.9.1, 10.2.1.2, 10.2.5, ~~10.4,~~ 10.4.1, 11.3.1, 12.2.4
Damages, Claims for
3.2.4, 3.18, 6.1.1, 8.3.3, 9.5.1, 9.6.7, 10.3.3, 11.1.1, 11.3.5, 11.3.7, 14.1.3, 14.2.4, 15.1.6
Damages for Delay
6.1.1, 8.3.3, 9.5.1.6, 9.7, 10.3.2
Date of Commencement of the Work, Definition of
8.1.2
Date of Substantial Completion, Definition of
8.1.3
Day, Definition of
8.1.4
Decisions of the Architect
3.7.4, 4.2.6, 4.2.7, 4.2.11, 4.2.12, 4.2.13, 15.2, 6.3, 7.3.7, 7.3.9, 8.1.3, 8.3.1, ~~9.2,~~ 9.2.1, 9.4, 9.5.1, 9.8.4, 9.9.1, 13.5.2, 14.2.2, 14.2.4, 15.1, 15.2
Decisions to Withhold Certification
9.4.1, **9.5**, 9.7, 14.1.1.3
Defective or Nonconforming Work, Acceptance, Rejection and Correction of
~~2.3, 2.4, 3.5,~~ 2.3.1, 2.4.1, 3.5.1, 4.2.6, 6.2.5, 9.5.1, 9.5.2, 9.6.6, 9.8.2, 9.9.3, 9.10.4, 12.2.1
Defective Work, Definition of
3.5.1
Definitions
1.1, 2.1.1, 3.1.1, ~~3.5,~~ 3.5.1, 3.12.1, 3.12.2, 3.12.3, 4.1.1, 15.1.1, 5.1, 6.1.2, 7.2.1, 7.3.1, 8.1, 9.1, 9.8.1
Delays and Extensions of Time
~~3.2,~~ 3.2., 3.7.4, 5.2.3, 7.2.1, 7.3.1, ~~7.4,~~ 7.4.1, **8.3**, 9.5.1, ~~9.7, 10.3.2, 10.4,~~ 9.7.1, 10.3.2, 10.4.1, 14.3.2, 15.1.5, 15.2.5
Disputes
~~6.3,~~ 6.3.1, 7.3.9, 15.1, 15.2
Documents and Samples at the Site
3.11
Drawings, Definition of
1.1.5
Drawings and Specifications, Use and Ownership of
3.11

Init.
/

AIA Document A201® – 2007. Copyright © 1911, 1915, 1918, 1925, 1937, 1951, 1958, 1961, 1963, 1966, 1970, 1976, 1987, 1997 and 2007 by The American Institute of Architects. All rights reserved. The "American Institute of Architects," "AIA," the AIA Logo, "A201," and "AIA Contract Documents" are registered trademarks and may not be used without permission. This document was produced by AIA software at 09:39:13 ET on 09/22/2020 under Order No.8752807719 which expires on 09/14/2021, is not for resale, is licensed for one-time use only, and may only be used in accordance with the AIA Contract Documents® Terms of Service. To report copyright violations, e-mail copyright@aia.org.
User Notes: (1516648771)

Effective Date of Insurance
8.2.2, 11.1.2
Emergencies
10.4, 14.1.1.2, 15.1.4
Employees, Contractor's
3.3.2, 3.4.3, 3.8.1, 3.9, 3.18.2, 4.2.3, 4.2.6, 10.2, 10.3.3, 11.1.1, 11.3.7, 14.1, 14.2.1.1
Equipment, Labor, Materials or
1.1.3, 1.1.6, 3.4, ~~3.5,~~ 3.5.1, 3.8.2, 3.8.3, 3.12, ~~3.13,~~ 3.13.1, 3.15.1, 4.2.6, 4.2.7, 5.2.1, 6.2.1, 7.3.7, 9.3.2, 9.3.3, 9.5.1.3, 9.10.2, 10.2.1, 10.2.4, 14.2.1.1, 14.2.1.2
Execution and Progress of the Work
1.1.3, 1.2.1, 1.2.2, 2.2.3, 2.2.5, 3.1, 3.3.1, 3.4.1, ~~3.5,~~ 3.5.1, 3.7.1, 3.10.1, 3.12, 3.14, 4.2, 6.2.2, 7.1.3, 7.3.5, 8.2, 9.5.1, 9.9.1, 10.2, 10.3, 12.2, 14.2, 14.3.1, 15.1.3
Extensions of Time
3.2.4, 3.7.4, 5.2.3, 7.2.1, 7.3, ~~7.4, 9.5.1, 9.7, 10.3.2, 10.4,~~ 7.4.1, 9.5.1, 9.7.1, 10.3.2, 10.4.1, 14.3, 15.1.5, 15.2.5
Failure of Payment
9.5.1.3, **9.7**, 9.10.2, 13.6, 14.1.1.3, 14.2.1.2
Faulty Work
(See Defective or Nonconforming Work)
Final Completion and Final Payment
4.2.1, 4.2.9, 9.8.2, **9.10**, 11.1.2, 11.1.3, 11.3.1, 11.3.5, ~~12.3,~~ 12.3.1, 14.2.4, 14.4.3
Financial Arrangements, Owner's
2.2.1, 13.2.2, 14.1.1.4
Fire and Extended Coverage Insurance
11.3.1.1
GENERAL PROVISIONS
1
Governing Law
13.1
Guarantees (See Warranty)
Hazardous Materials
10.2.4, **10.3**
Identification of Subcontractors and Suppliers
5.2.1
Indemnification
~~3.17,~~ 3.17.1, **3.18**, 9.10.2, 10.3.3, 10.3.5, 10.3.6, 11.3.1.2, 11.3.7
Information and Services Required of the Owner
2.1.2, **2.2**, 3.2.2, 3.12.4, 3.12.10, 6.1.3, 6.1.4, 6.2.5, 9.6.1, 9.6.4, 9.9.2, 9.10.3, 10.3.3, 11.2, 11.4, 13.5.1, 13.5.2, 14.1.1.4, 14.1.4, 15.1.3
Initial Decision
15.2
Initial Decision Maker, Definition of
1.1.8
Initial Decision Maker, Decisions
14.2.2, 14.2.4, 15.2.1, 15.2.2, 15.2.3, 15.2.4, 15.2.5
Initial Decision Maker, Extent of Authority
14.2.2, 14.2.4, 15.1.3, 15.2.1, 15.2.2, 15.2.3, 15.2.4, 15.2.5
Injury or Damage to Person or Property
10.2.8, ~~10.4~~10.4.1
Inspections
3.1.3, 3.3.3, 3.7.1, 4.2.2, 4.2.6, 4.2.9, 9.4.2, 9.8.3, 9.9.2, 9.10.1, 12.2.1, 13.5
Instructions to Bidders
1.1.1
Instructions to the Contractor
3.2.4, 3.3.1, 3.8.1, 5.2.1, 7, 8.2.2, 12, 13.5.2
Instruments of Service, Definition of
1.1.7
Insurance
3.18.1, 6.1.1, 7.3.7, 9.3.2, 9.8.4, 9.9.1, 9.10.2, **11**
Insurance, Boiler and Machinery
11.3.2
Insurance, Contractor's Liability
11.1
Insurance, Effective Date of
8.2.2, 11.1.2
Insurance, Loss of Use
11.3.3
Insurance, Owner's Liability
11.2
Insurance, Property
10.2.5, **11.3**
Insurance, Stored Materials
~~9.3.2~~9.3.2, 11.4.1.4
INSURANCE AND BONDS
11
Insurance Companies, Consent to Partial Occupancy
9.9.1, 11.4.1.5
Insurance Companies, Settlement with
~~9.9.1~~11.4.10
Intent of the Contract Documents
1.2.1, 4.2.7, 4.2.12, 4.2.13, 7.4
Interest
13.6
Interpretation
1.2.3, **1.4**, 4.1.1, 5.1, 6.1.2, 15.1.1
Interpretations, Written
4.2.11, 4.2.12, 15.1.4
Judgment on Final Award
15.4.2
Labor and Materials, Equipment
1.1.3, 1.1.6, **3.4**, ~~3.5,~~ 3.5.1, 3.8.2, 3.8.3, 3.12, 3.13, 3.15.1, 4.2.6, 4.2.7, 5.2.1, 6.2.1, 7.3.7, 9.3.2, 9.3.3, 9.5.1.3, 9.10.2, 10.2.1, 10.2.4, 14.2.1.1, 14.2.1.2
Labor Disputes
8.3.1
Laws and Regulations
1.5, 3.2.3, 3.6, 3.7, 3.12.10, ~~3.13,~~ 3.13.1, 4.1.1, 9.6.4, 9.9.1, 10.2.2, 11.1.1, 11.3, ~~13.1,~~ 13.1.1, 13.4, 13.5.1, 13.5.2, ~~13.6,~~ 13.6.1, 14, 15.2.8, 15.4
Liens
2.1.2, 9.3.3, 9.10.2, 9.10.4, 15.2.8
Limitations, Statutes of
12.2.5, 13.7, 15.4.1.1

AIA Document A201® – 2007. Copyright © 1911, 1915, 1918, 1925, 1937, 1951, 1958, 1961, 1963, 1966, 1970, 1976, 1987, 1997 and 2007 by The American Institute of Architects. All rights reserved. The "American Institute of Architects," "AIA," the AIA Logo, "A201," and "AIA Contract Documents" are registered trademarks and may not be used without permission. This document was produced by AIA software at 09:39:13 ET on 09/22/2020 under Order No.8752807719 which expires on 09/14/2021, is not for resale, is licensed for one-time use only, and may only be used in accordance with the AIA Contract Documents® Terms of Service. To report copyright violations, e-mail copyright@aia.org.
User Notes: (1516648771)

Limitations of Liability
~~2.3, 3.2.2, 3.5, 3.12.10, 3.17,~~ 2.3.1, 3.2.2, 3.5.1, 3.12.10, 3.17.1, 3.18.1, 4.2.6, 4.2.7, 4.2.12, 6.2.2, 9.4.2, 9.6.4, 9.6.7, 10.2.5, 10.3.3, 11.1.2, 11.2, 11.3.7, 12.2.5, 13.4.2
Limitations of Time
2.1.2, 2.2, 2.4, 3.2.2, 3.10, 3.11, 3.12.5, 3.15.1, 4.2.7, 5.2, ~~5.3,~~ 5.3.1, 5.4.1, 6.2.4, 7.3, 7.4, 8.2, ~~9.2,~~ 9.2.1, 9.3.1, 9.3.3, 9.4.1, 9.5, 9.6, ~~9.7,~~ 9.7.1, 9.8, 9.9, 9.10, 11.1.3, 11.3.1.5, 11.3.6, 11.3.10, 12.2, 13.5, 13.7, 14, 15
Loss of Use Insurance
11.3.3
Material Suppliers
1.5, 3.12.1, 4.2.4, 4.2.6, 5.2.1, 9.3, 9.4.2, 9.6, 9.10.5
Materials, Hazardous
10.2.4, **10.3**
Materials, Labor, Equipment and
1.1.3, 1.1.6, 1.5.1, 3.4.1, ~~3.5,~~ 3.5.1, 3.8.2, 3.8.3, 3.12, ~~3.13,~~ 3.13.1, 3.15.1, 4.2.6, 4.2.7, 5.2.1, 6.2.1, 7.3.7, 9.3.2, 9.3.3, 9.5.1.3, 9.10.2, 10.2.1.2, 10.2.4, 14.2.1.1, 14.2.1.2
Means, Methods, Techniques, Sequences and Procedures of Construction
3.3.1, 3.12.10, 4.2.2, 4.2.7, 9.4.2
Mechanic's Lien
2.1.2, 15.2.8
Mediation
8.3.1, 10.3.5, 10.3.6, 15.2.1, 15.2.5, 15.2.6, **15.3**, 15.4.1
Minor Changes in the Work
1.1.1, 3.12.8, 4.2.8, 7.1, **7.4**
MISCELLANEOUS PROVISIONS
13
Modifications, Definition of
1.1.1
Modifications to the Contract
1.1.1, 1.1.2, 3.11, 4.1.2, 4.2.1, 5.2.3, 7, 8.3.1, ~~9.7,~~ 9.7.1, 10.3.2, 11.3.1
Mutual Responsibility
6.2
Nonconforming Work, Acceptance of
9.6.6, 9.9.3, **12.3**
Nonconforming Work, Rejection and Correction of
~~2.3, 2.4, 3.5,~~ 2.3.1, 2.4.1, 3.5.1, 4.2.6, 6.2.4, 9.5.1, 9.8.2, 9.9.3, 9.10.4, 12.2.1
Notice
2.2.1, ~~2.3, 2.4,~~ 2.3.1, 2.4.1, 3.2.4, 3.3.1, 3.7.2, 3.12.9, 5.2.1, ~~9.7,~~ 9.7.1, 9.10, 10.2.2, 11.1.3, 11.4.6, 12.2.2.1, 13.3, 13.5.1, 13.5.2, 14.1, 14.2, 15.2.8, 15.4.1
Notice, Written
~~2.3, 2.4,~~ 2.3.1, 2.4.1, 3.3.1, 3.9.2, 3.12.9, 3.12.10, 5.2.1, ~~9.7,~~ 9.7.1, 9.10, 10.2.2, 10.3, 11.1.3, 11.3.6, 12.2.2.1, **13.3**, 14, 15.2.8, 15.4.1
Notice of Claims
3.7.4, 4.5, 10.2.8, **15.1.2**, 15.4
Notice of Testing and Inspections
13.5.1, 13.5.2
Observations, Contractor's
3.2, 3.7.4
Occupancy
2.2.2, 9.6.6, 9.8, 11.3.1.5
Orders, Written
1.1.1, 2.3, 3.9.2, 7, 8.2.2, 11.3.9, 12.1, 12.2.2.1, 13.5.2, 14.3.1
OWNER
2
Owner, Definition of
2.1.1
Owner, Information and Services Required of the
2.1.2, **2.2**, 3.2.2, 3.12.10, 6.1.3, 6.1.4, 6.2.5, 9.3.2, 9.6.1, 9.6.4, 9.9.2, 9.10.3, 10.3.3, 11.2, 11.3, 13.5.1, 13.5.2, 14.1.1.4, 14.1.4, 15.1.3
Owner's Authority
1.5, 2.1.1, ~~2.3, 2.4,~~ 2.3.1, 2.4.1, 3.4.2, 3.8.1, 3.12.10, 3.14.2, 4.1.2, 4.1.3, 4.2.4, 4.2.9, 5.2.1, 5.2.4, 5.4.1, 6.1, ~~6.3,~~ 6.3.1, 7.2.1, 7.3.1, 8.2.2, 8.3.1, 9.3.1, 9.3.2, 9.5.1, 9.6.4, 9.9.1, 9.10.2, 10.3.2, 11.1.3, 11.3.3, 11.3.10, 12.2.2, ~~12.3,~~ 12.3.1, 13.2.2, 14.3, 14.4, 15.2.7
Owner's Financial Capability
2.2.1, 13.2.2, 14.1.1.4
Owner's Liability Insurance
11.2
Owner's Loss of Use Insurance
11.3.3
Owner's Relationship with Subcontractors
1.1.2, 5.2, 5.3, 5.4, 9.6.4, 9.10.2, 14.2.2
Owner's Right to Carry Out the Work
2.4, 14.2.2
Owner's Right to Clean Up
6.3
Owner's Right to Perform Construction and to Award Separate Contracts
6.1
Owner's Right to Stop the Work
2.3
Owner's Right to Suspend the Work
14.3
Owner's Right to Terminate the Contract
14.2
Ownership and Use of Drawings, Specifications and Other Instruments of Service
1.1.1, 1.1.6, 1.1.7, **1.5**, 2.2.5, 3.2.2, ~~3.11, 3.17, 4.2.12, 5.3~~3.11.1, 3.17.1, 4.2.12, 5.3.1
Partial Occupancy or Use
9.6.6, **9.9**, 11.3.1.5
Patching, Cutting and
3.14, 6.2.5
Patents
3.17
Payment, Applications for
4.2.5, 7.3.9, ~~9.2,~~ 9.2.1, **9.3**, 9.4, 9.5, 9.6.3, ~~9.7,~~ 9.7.1, 9.8.5, 9.10.1, 14.2.3, 14.2.4, 14.4.3

AIA Document A201® – 2007. Copyright © 1911, 1915, 1918, 1925, 1937, 1951, 1958, 1961, 1963, 1966, 1970, 1976, 1987, 1997 and 2007 by The American Institute of Architects. All rights reserved. The "American Institute of Architects," "AIA," the AIA Logo, "A201," and "AIA Contract Documents" are registered trademarks and may not be used without permission. This document was produced by AIA software at 09:39:13 ET on 09/22/2020 under Order No.8752807719 which expires on 09/14/2021, is not for resale, is licensed for one-time use only, and may only be used in accordance with the AIA Contract Documents® Terms of Service. To report copyright violations, e-mail copyright@aia.org.
User Notes: (1516648771)

Payment, Certificates for
4.2.5, 4.2.9, 9.3.3, **9.4**, 9.5, 9.6.1, 9.6.6, ~~9.7,~~ 9.7.1, 9.10.1, 9.10.3, 13.7, 14.1.1.3, 14.2.4
Payment, Failure of
9.5.1.3, **9.7**, 9.10.2, 13.6, 14.1.1.3, 14.2.1.2
Payment, Final
4.2.1, 4.2.9, 9.8.2, 9.10, 11.1.2, 11.1.3, 11.4.1, ~~12.3,~~ 11.4.5, 12.3.1, 13.7, 14.2.4, 14.4.3
Payment Bond, Performance Bond and
7.3.7.4, 9.6.7, 9.10.3, 11.4.9, **11.4**
Payments, Progress
9.3, **9.6**, 9.8.5, 9.10.3, 13.6, 14.2.3, 15.1.3
PAYMENTS AND COMPLETION
9
Payments to Subcontractors
5.4.2, 9.5.1.3, 9.6.2, 9.6.3, 9.6.4, 9.6.7, 11.4.8, 14.2.1.2
PCB
10.3.1
Performance Bond and Payment Bond
7.3.7.4, 9.6.7, 9.10.3, 11.4.9, **11.4**
Permits, Fees, Notices and Compliance with Laws
2.2.2, **3.7**, 3.13, 7.3.7.4, 10.2.2
PERSONS AND PROPERTY, PROTECTION OF
10
Polychlorinated Biphenyl
10.3.1
Product Data, Definition of
3.12.2
Product Data and Samples, Shop Drawings
3.11, **3.12**, 4.2.7
Progress and Completion
4.2.2, **8.2**, 9.8, 9.9.1, 14.1.4, 15.1.3
Progress Payments
9.3, **9.6**, 9.8.5, 9.10.3, 13.6, 14.2.3, 15.1.3
Project, Definition of the
1.1.4
Project Representatives
4.2.10
Property Insurance
10.2.5, **11.3**
PROTECTION OF PERSONS AND PROPERTY
10
Regulations and Laws
1.5, 3.2.3, 3.6, 3.7, 3.12.10, 3.13, 4.1.1, 9.6.4, 9.9.1, 10.2.2, 11.1, 11.4, 13.1, 13.4, 13.5.1, 13.5.2, 13.6, 14, 15.2.8, 15.4
Rejection of Work
~~3.5,~~ 3.5.1, 4.2.6, 12.2.1
Releases and Waivers of Liens
9.10.2
Representations
3.2.1, ~~3.5,~~ 3.5.1, 3.12.6, 6.2.2, 8.2.1, 9.3.3, 9.4.2, 9.5.1, 9.8.2, 9.10.1
Representatives
2.1.1, 3.1.1, 3.9, 4.1.1, 4.2.1, 4.2.2, 4.2.10, 5.1.1, 5.1.2, 13.2.1
Responsibility for Those Performing the Work
3.3.2, 3.18, 4.2.3, ~~5.3,~~ 5.3.1, 6.1.3, 6.2, 6.3, 9.5.1, 10
Retainage
9.3.1, 9.6.2, 9.8.5, 9.9.1, 9.10.2, 9.10.3
Review of Contract Documents and Field Conditions by Contractor
3.2, 3.12.7, 6.1.3
Review of Contractor's Submittals by Owner and Architect
3.10.1, 3.10.2, 3.11, 3.12, 4.2, 5.2, 6.1.3, 9.2, 9.8.2
Review of Shop Drawings, Product Data and Samples by Contractor
3.12
Rights and Remedies
1.1.2, 2.3, 2.4, ~~3.5,~~ 3.5.1, 3.7.4, 3.15.2, 4.2.6, 4.5, 5.3, 5.4, 6.1, 6.3, 7.3.1, 8.3, 9.5.1, 9.7, 10.2.5, 10.3, 12.2.2, 12.2.4, **13.4**, 14, 15.4
Royalties, Patents and Copyrights
3.17
Rules and Notices for Arbitration
15.4.1
Safety of Persons and Property
10.2, 10.4
Safety Precautions and Programs
3.3.1, 4.2.2, 4.2.7, ~~5.3,~~ 5.3.1, **10.1**, 10.2, 10.4
Samples, Definition of
3.12.3
Samples, Shop Drawings, Product Data and
3.11, **3.12**, 4.2.7
Samples at the Site, Documents and
3.11
Schedule of Values
9.2, 9.3.1
Schedules, Construction
3.10, 3.12.1, 3.12.2, 6.1.3, 15.1.5.2
Separate Contracts and Contractors
1.1.4, 3.12.5, 3.14.2, 4.2.4, 4.2.7, 6, 8.3.1, 11.4.7, 12.1.2
Shop Drawings, Definition of
3.12.1
Shop Drawings, Product Data and Samples
3.11, **3.12**, 4.2.7
Site, Use of
3.13, 6.1.1, 6.2.1
Site Inspections
3.2.2, 3.3.3, 3.7.1, 3.7.4, 4.2, 9.4.2, 9.10.1, 13.5
Site Visits, Architect's
3.7.4, 4.2.2, 4.2.9, 9.4.2, 9.5.1, 9.9.2, 9.10.1, 13.5
Special Inspections and Testing
4.2.6, 12.2.1, 13.5
Specifications, Definition of the
1.1.6
~~**Specifications**~~**Specifications, The**
1.1.1, **1.1.6**, 1.2.2, 1.5, 3.11, 3.12.10, 3.17, 4.2.14
Statute of Limitations
13.7, 15.4.1.1

AIA Document A201® – 2007. Copyright © 1911, 1915, 1918, 1925, 1937, 1951, 1958, 1961, 1963, 1966, 1970, 1976, 1987, 1997 and 2007 by The American Institute of Architects. All rights reserved. The "American Institute of Architects," "AIA," the AIA Logo, "A201," and "AIA Contract Documents" are registered trademarks and may not be used without permission. This document was produced by AIA software at 09:39:13 ET on 09/22/2020 under Order No.8752807719 which expires on 09/14/2021, is not for resale, is licensed for one-time use only, and may only be used in accordance with the AIA Contract Documents® Terms of Service. To report copyright violations, e-mail copyright@aia.org.
User Notes: (1516648771)

Stopping the Work
2.3, 9.7, 10.3, 14.1
Stored Materials
6.2.1, 9.3.2, 10.2.1.2, ~~10.2.4~~10.2.4, 11.4.1.4
Subcontractor, Definition of
5.1.1
SUBCONTRACTORS
5
Subcontractors, Work by
1.2.2, 3.3.2, 3.12.1, 4.2.3, 5.2.3, 5.3, 5.4, 9.3.1.2, 9.6.7
Subcontractual Relations
5.3, 5.4, 9.3.1.2, 9.6, 9.10, 10.2.1, 11.4.7, 11.4.8, 14.1, 14.2.1
Submittals
3.10, 3.11, 3.12, 4.2.7, 5.2.1, 5.2.3, 7.3.7, 9.2, 9.3, 9.8, 9.9.1, 9.10.2, 9.10.3, 11.1.3
Submittal Schedule
3.10.2, 3.12.5, 4.2.7
Subrogation, Waivers of
6.1.1, 11.4.5, **11.3.7**
Substantial Completion
4.2.9, 8.1.1, 8.1.3, 8.2.3, 9.4.2, **9.8**, 9.9.1, 9.10.3, 12.2, 13.7
Substantial Completion, Definition of
9.8.1
Substitution of Subcontractors
5.2.3, 5.2.4
Substitution of Architect
4.1.3
Substitutions of Materials
3.4.2, ~~3.5,~~ 3.5.1, 7.3.8
Sub-subcontractor, Definition of
5.1.2
Subsurface Conditions
3.7.4
Successors and Assigns
13.2
Superintendent
3.9, 10.2.6
Supervision and Construction Procedures
1.2.2, **3.3**, 3.4, 3.12.10, 4.2.2, 4.2.7, 6.1.3, 6.2.4, 7.1.3, 7.3.7, 8.2, 8.3.1, 9.4.2, 10, 12, 14, 15.1.3
Surety
5.4.1.2, 9.8.5, 9.10.2, 9.10.3, 14.2.2, 15.2.7
Surety, Consent of
9.10.2, 9.10.3
Surveys
2.2.3
Suspension by the Owner for Convenience
14.3
Suspension of the Work
5.4.2, 14.3
Suspension or Termination of the Contract
5.4.1.1, 11.4.9, 14
Taxes
3.6, 3.8.2.1, 7.3.7.4
Termination by the Contractor
14.1, 15.1.6
Termination by the Owner for Cause
5.4.1.1, **14.2,** 15.1.6
Termination by the Owner for Convenience
14.4
Termination of the Architect
4.1.3
Termination of the Contractor
14.2.2
TERMINATION OR SUSPENSION OF THE CONTRACT
14
Tests and Inspections
3.1.3, 3.3.3, 4.2.2, 4.2.6, 4.2.9, 9.4.2, 9.8.3, 9.9.2, 9.10.1, 10.3.2, ~~11.4.1,~~ 11.4.1.1, 12.2.1, **13.5**
TIME
8
Time, Delays and Extensions of
3.2.4, 3.7.4, 5.2.3, 7.2.1, 7.3.1, ~~7.4,~~ 7.4.1, **8.3**, 9.5.1, ~~9.7, 10.3.2, 10.4,~~ 9.7.1, 10.3.2, 10.4.1, 14.3.2, 15.1.5, 15.2.5
Time Limits
2.1.2, 2.2, 2.4, 3.2.2, 3.10, 3.11, 3.12.5, 3.15.1, 4.2, 4.4, 4.5, 5.2, 5.3, 5.4, 6.2.4, 7.3, 7.4, 8.2, 9.2, 9.3.1, 9.3.3, 9.4.1, 9.5, 9.6, 9.7, 9.8, 9.9, 9.10, 11.1.3, 11.4.1.5, 11.4.6, 11.4.10, 12.2, 13.5, 13.7, 14, 15.1.2, 15.4
Time Limits on Claims
3.7.4, 10.2.8, **13.7**, 15.1.2
Title to Work
9.3.2, 9.3.3
Transmission of Data in Digital Form
1.6
UNCOVERING AND CORRECTION OF WORK
12
Uncovering of Work
12.1
Unforeseen Conditions, Concealed or Unknown
3.7.4, 8.3.1, 10.3
Unit Prices
7.3.3.2, 7.3.4
Use of Documents
1.1.1, 1.5, 2.2.5, 3.12.6, 5.3
Use of Site
3.13, 6.1.1, 6.2.1
Values, Schedule of
9.2, 9.3.1
Waiver of Claims by the Architect
13.4.2
Waiver of Claims by the Contractor
9.10.5, 11.4.7, 13.4.2, 15.1.6
Waiver of Claims by the Owner
9.9.3, 9.10.3, 9.10.4, 11.4.3, 11.4.5, 11.4.7, 12.2.2.1, 13.4.2, 14.2.4, 15.1.6
Waiver of Consequential Damages
14.2.4, 15.1.6

AIA Document A201® – 2007. Copyright © 1911, 1915, 1918, 1925, 1937, 1951, 1958, 1961, 1963, 1966, 1970, 1976, 1987, 1997 and 2007 by The American Institute of Architects. All rights reserved. The "American Institute of Architects," "AIA," the AIA Logo, "A201," and "AIA Contract Documents" are registered trademarks and may not be used without permission. This document was produced by AIA software at 09:39:13 ET on 09/22/2020 under Order No.8752807719 which expires on 09/14/2021, is not for resale, is licensed for one-time use only, and may only be used in accordance with the AIA Contract Documents® Terms of Service. To report copyright violations, e-mail copyright@aia.org.
User Notes: (1516648771)

Waiver of Liens
9.10.2, 9.10.4
Waivers of Subrogation
6.1.1, 11.4.5, **11.3.7**
Warranty
3.5, 4.2.9, 9.3.3, 9.8.4, 9.9.1, 9.10.4, 12.2.2, ~~13.7~~
13.7.1
Weather Delays
15.1.5.2
Work, Definition of
1.1.3
Written Consent
1.5.2, 3.4.2, 3.7.4, 3.12.8, 3.14.2, 4.1.2, 9.3.2, 9.8.5, 9.9.1, 9.10.2, 9.10.3, 11.4.1, 13.2, 13.4.2, 15.4.4.2
Written Interpretations
4.2.11, 4.2.12
Written Notice
2.3, 2.4, 3.3.1, 3.9, 3.12.9, 3.12.10, 5.2.1, 8.2.2, 9.7, 9.10, 10.2.2, 10.3, 11.1.3, 11.4.6, 12.2.2, 12.2.4, **13.3**, 14, 15.4.1
Written Orders
1.1.1, 2.3, 3.9, 7, 8.2.2, 11.4.9, 12.1, 12.2, 13.5.2, 14.3.1, 15.1.2

AIA Document A201® – 2007. Copyright © 1911, 1915, 1918, 1925, 1937, 1951, 1958, 1961, 1963, 1966, 1970, 1976, 1987, 1997 and 2007 by The American Institute of Architects. All rights reserved. The "American Institute of Architects," "AIA," the AIA Logo, "A201," and "AIA Contract Documents" are registered trademarks and may not be used without permission. This document was produced by AIA software at 09:39:13 ET on 09/22/2020 under Order No.8752807719 which expires on 09/14/2021, is not for resale, is licensed for one-time use only, and may only be used in accordance with the AIA Contract Documents® Terms of Service. To report copyright violations, e-mail copyright@aia.org.
User Notes: (1516648771)

ARTICLE 1 GENERAL PROVISIONS

§ 1.1 BASIC DEFINITIONS

§ 1.1.1 THE CONTRACT DOCUMENTS

The Contract Documents are enumerated in the ~~Agreement~~ Contract between the Owner and Contractor (hereinafter the ~~Agreement)~~ Contract) and consist of the ~~Agreement,~~ Contract, Conditions of the Contract (General, Supplementary and other Conditions), Drawings, Specifications, Addenda issued prior to execution of the Contract, other documents listed in the ~~Agreement~~ Contract and Modifications issued after execution of the Contract. A Modification is (1) a written amendment to the Contract signed by both parties, (2) a Change Order, (3) a Construction Change Directive or (4) a written order for a minor change in the Work issued by the ~~Architect.~~ Architect or Owner. Unless specifically ~~enumerated~~ excluded in the ~~Agreement,~~ Contract, the Contract Documents do ~~not~~ include the advertisement or invitation to bid, Instructions to Bidders, sample forms, other information furnished by the Owner in anticipation of receiving bids or proposals, the ~~Contractor's bid or proposal,~~ Project Manual, the Contractor's bid or proposal (to the extent it does not conflict with Owner's Bid Documents), or portions of Addenda relating to bidding requirements.

§ 1.1.2 THE CONTRACT

The Contract Documents form the Contract for Construction. The Contract represents the entire and integrated agreement between the parties hereto and supersedes prior negotiations, representations or agreements, either written or oral. The Contract may be amended or modified only by a Modification. The Contract Documents shall not be construed to create a contractual relationship of any kind (1) between the Contractor and the Architect or the Architect's consultants, (2) between the Owner and a Subcontractor or a Sub-subcontractor, (3) between the Owner and the Architect or the Architect's consultants or (4) between any persons or entities other than the Owner and the Contractor. The Architect shall, however, be entitled to performance and enforcement of obligations under the Contract intended to facilitate performance of the Architect's duties.

§ 1.1.3 THE WORK

The term "Work" ~~means the construction and services required by the Contract Documents, whether completed or partially completed, and includes all other labor, materials, equipment and services provided or to be provided by the Contractor to fulfill the Contractor's obligations.~~ consists of all goods and services, such as labor, transportation, materials, tools, and equipment (1) to be incorporated into the Project (or the Contractor's portion of the Project if the Contractor is not responsible for the entire Project), (2) required of the Contractor under the Contract Documents, or (3) necessary or appropriate to fully construct, fixture, operate and maintain the Project (or the Contractor's portion of the Contract if the Contractor is not responsible for the entire Project). The Work shall be performed in accordance with the Contract Documents. The Work may constitute the whole or a part of the Project. The term "Work" shall also include labor, materials, equipment and services provided or to be provided by subcontractors, sub-subcontractors, material suppliers or any other entity for whom the Contractor is responsible under or pursuant to the Contract Documents.

§ 1.1.4 THE PROJECT

The Project is the total construction of which the Work performed under the Contract Documents may be the whole or a part and which may include construction by the Owner and by separate contractors.

§ 1.1.5 THE DRAWINGS

The Drawings are the graphic and pictorial portions of the Contract Documents showing the design, location and dimensions of the Work, generally including plans, elevations, sections, details, schedules and diagrams.

§ 1.1.6 THE SPECIFICATIONS

The Specifications are that portion of the Contract Documents consisting of the written requirements for materials, equipment, systems, standards and workmanship for the Work, and performance of related services.

§ 1.1.7 INSTRUMENTS OF SERVICE

Instruments of Service are representations, in any medium of expression now known or later developed, of the tangible and intangible creative work performed by the Architect and the Architect's consultants under their respective professional services agreements. Instruments of Service may include, without limitation, studies, surveys, models, sketches, drawings, specifications, and other similar materials.

AIA Document A201® – 2007. Copyright © 1911, 1915, 1918, 1925, 1937, 1951, 1958, 1961, 1963, 1966, 1970, 1976, 1987, 1997 and 2007 by The American Institute of Architects. All rights reserved. The "American Institute of Architects," "AIA," the AIA Logo, "A201," and "AIA Contract Documents" are registered trademarks and may not be used without permission. This document was produced by AIA software at 09:39:13 ET on 09/22/2020 under Order No.8752807719 which expires on 09/14/2021, is not for resale, is licensed for one-time use only, and may only be used in accordance with the AIA Contract Documents® Terms of Service. To report copyright violations, e-mail copyright@aia.org.
User Notes: (1516648771)

§ 1.1.8 INITIAL DECISION MAKER

The Initial Decision Maker ~~is the person identified in the Agreement~~ shall be the Architect, unless otherwise identified in the Contract to render initial decisions on Claims in accordance with Section 15.2 and certify termination of the ~~Agreement under Section 14.2.2.~~ Contract under Section 14.2.2.

§ 1.1.9 THE PROJECT MANUAL

The Project Manual is a volume of documents assembled for the Work which may include the bidding requirement, sample forms, Conditions of the Contract, Specifications, Drawings, the Contract and other information furnished by the Owner.

§ 1.1.10 APPLICABLE LAWS

Applicable Laws means all applicable federal, state and local codes, statutes, ordinances, laws including, but not limited to, the Americans with Disabilities Act ("ADA"), the Revised School Code, MCL 380.1 et seq., the School Building Construction Act, MCL 388.851 et seq., the Stille-Derosett-Hale Single State Construction Code Act, MCL 125.1501 et seq., the Michigan Building Code, and the rules and regulations, and lawful orders of all public authorities having jurisdiction over the Project, the Work site, the Work or the prosecution of the Work.

§ 1.1.11 CONSTRUCTION SCHEDULE

The Construction Schedule is the Critical Path Method ("CPM") schedule for construction of the Work submitted as part of the Contractor's Proposal, prepared by the Contractor and approved by the Owner in writing in accordance with Section 3.10. The Construction Schedule can be modified only by Change Order. Following any such modification, the term "Construction Schedule" shall mean the most recent Owner-approved version. The initial agreed upon Construction Schedule is attached to the Contract as an Exhibit and is referred to as the Project Schedule. Sometimes in these General Conditions the term "Project Schedule" is used. It shall have the same meaning as the Construction Schedule.

§ 1.1.12 MILESTONE DATES

The Milestone Dates are those dates included in the Construction Schedule that are critical to ensuring the timely and orderly completion of the Work in accordance with the requirements of the Contract Documents.

§ 1.1.13 CONSTRUCTION TEAM

The Construction Team includes the Contractor, Subcontractors, Sub-subcontractor at any tier and suppliers and (1) all other persons in privity of contract with any of them in connection with the Work (except the Owner), (2) anyone else providing labor, materials, supplies, equipment or services as part of or in connection with the Work (except those, if any, hired directly or indirectly by the Owner) and (3) all of their officers, employees, agents, and independent contractors.

§ 1.1.14 CONTRACT TIME

The Contract Time is the number of calendar days described in the Construction Schedule in which (or, alternatively, the date set forth in the Construction Schedule by which) Substantial Completion shall be achieved, subject to any extensions granted in duly executed Change Orders or otherwise specifically permitted by the Contract Documents.

§ 1.1.15 EXTRAORDINARY MEASURES

Extraordinary Measures are corrective measures necessary to expedite the progress of the Work, including (1) working additional shifts or overtime, (2) supplying additional manpower, equipment, and facilities, (3) expediting the delivery of materials, and (4) other similar measures. The Owner shall have the right to order the Contractor to take Extraordinary Measures when it determines that the performance of the Work, as of a Milestone Date, has not progressed to or reached the level of completion required by the Contract Documents, at Contractor's sole cost and expense.

§ 1.1.16 MASTER DESIGN AND CONSTRUCTION SCHEDULE

The Master Design and Construction Schedule is the preliminary schedule for the Work to be developed by the Owner or Contractor during the bidding and negotiation process and which shall, at a minimum, provide for major elements such as preparation of the design, phasing of construction, the time of commencement and completion required for each anticipated Bid Package.

§ 1.1.17 PUNCHLIST

AIA Document A201® – 2007. Copyright © 1911, 1915, 1918, 1925, 1937, 1951, 1958, 1961, 1963, 1966, 1970, 1976, 1987, 1997 and 2007 by The American Institute of Architects. All rights reserved. The "American Institute of Architects," "AIA," the AIA Logo, "A201," and "AIA Contract Documents" are registered trademarks and may not be used without permission. This document was produced by AIA software at 09:39:13 ET on 09/22/2020 under Order No.8752807719 which expires on 09/14/2021, is not for resale, is licensed for one-time use only, and may only be used in accordance with the AIA Contract Documents® Terms of Service. To report copyright violations, e-mail copyright@aia.org.
User Notes: (1516648771)

Punchlist means a list of uncompleted or unacceptable items of Work which do not interfere with the use or occupancy of any part of the Work for its intended purpose and which, unless delayed by a need to order materials that could not reasonably have been anticipated by the Contractor, collectively are capable of being completed within sixty (60) days.

§ 1.1.18 The term "Product(s)" as used in the Contract Documents refers to the materials, systems and equipment provided by the Contractor for use in the Work of the Project.

§ 1.1.19 The terms "Warranty" and "Guarantee" as used in the Contract Documents shall have the same meaning and shall be defined as "legally enforceable assurance of satisfactory performance or qualify of a product or "Work."

§ 1.1.20 Where materials, systems and equipment items are referred to in the singular, such reference shall not serve to limit the quantity required. The Contractor shall furnish quantities as required by the Contract Documents to complete the Work.

§ 1.1.21 Unless specifically limited in the Contract, the words "furnish," "install," and "provide," or any combination thereof mean to furnish and incorporate into the Work, including all necessary labor, materials, and equipment and other items required to perform the Work indicated.

§ 1.1.22 HAZARDOUS MATERIALS. Hazardous Materials shall mean and include any toxic or hazardous materials or substances as defined or regulated by in any U.S. environmental law or any Applicable Laws.

§ 1.1.23 PERMITTED MATERIALS. Permitted Materials shall mean materials that are general supplies and equipment that have a hazardous or potentially hazardous nature and are or will be used for their intended purpose and which do not pose any significant threat of contamination to the Project Site or neighboring properties.

§ 1.1.22 VALUE ENGINEERING
Value Engineering means the detailed analysis of systems, equipment, materials, services, facilities, and supplies required by the Contract Documents for the purpose of achieving the desired and essential functions of the Owner's program at the lowest cost consistent with required and necessary performance, reliability, quality and safety.

§ 1.1.23 The words "consent," "approved," "satisfactory," "proper," "as directed," any derivatives of them, or similar terms, mean written approval by the Owner, and may include approval of the Architect if the Owner so directs. Except where a different standard is specifically established, the Owner has the right to grant or withhold such approval in its sole discretion.

§ 1.1.24 The word "provide" and any derivatives thereof, and similar terms, mean to properly fabricate, complete, transport, deliver, install, erect, construct, test and furnish all labor, materials, equipment, apparatus, appurtenances, and all items and expenses necessary to properly complete in place, ready for operation or use under the terms of the Contract Documents.

§ 1.1.25 The terms "known," "knowledge," "recognize," "believe," and "discover," and any derivatives thereof and similar terms, when used in reference to the Contractor, shall mean that which the Contractor knows or should reasonably know, recognized or should reasonably recognize, and discovers or should reasonably discover in exercising the care, skill, and diligence required of the Contractor by the Contract. The expression "reasonably inferable" and similar terms mean reasonably inferable by a Contractor familiar with the Work an exercising the care, skill and diligence required of the Contractor by the Contract.

§ 1.1.26 The word "including" shall not be a word of limitation, but instead shall be construed as introducing one or more nonexclusive examples.

§ 1.1.27 Words or abbreviations that are not defined but have well-known technical, trade or construction industry meanings, shall have those meanings ascribed to them. The singular shall include the plural and vice versa. Pronouns are interchangeable. The word "person" includes human beings and recognized legal entities. Unless the context clearly requires otherwise, reference to a section shall include all subsections beneath it bearing identical introductory numbers.

AIA Document A201® – 2007. Copyright © 1911, 1915, 1918, 1925, 1937, 1951, 1958, 1961, 1963, 1966, 1970, 1976, 1987, 1997 and 2007 by The American Institute of Architects. All rights reserved. The "American Institute of Architects," "AIA," the AIA Logo, "A201," and "AIA Contract Documents" are registered trademarks and may not be used without permission. This document was produced by AIA software at 09:39:13 ET on 09/22/2020 under Order No.8752807719 which expires on 09/14/2021, is not for resale, is licensed for one-time use only, and may only be used in accordance with the AIA Contract Documents® Terms of Service. To report copyright violations, e-mail copyright@aia.org.
User Notes: (1516648771)

§ 1.2 CORRELATION AND INTENT OF THE CONTRACT DOCUMENTS

§ 1.2.1 The intent of the Contract Documents is to include ~~all items~~ everything necessary for the proper execution and completion of the ~~Work by the Contractor.~~ Work. The Contract Documents are complementary, and what is required by one shall be as binding as if required by all; performance by the Contractor shall be required only to the extent consistent with the Contract Documents and reasonably inferable from them as being necessary to produce the indicated results. Work called for on the Drawings and not mentioned in the specifications, or vice versa, shall be performed as though fully set forth in both. Nothing in this Section 1.2, however, shall relieve the Contractor of any of its obligations under the Contract Documents. Other conflicts between or among the Contract Documents shall be resolved under the following rules of construction:

.1 The specific shall govern over the general;

.2 Specified dimensions shown on the Drawings shall govern, even though they may differ from dimensions scaled on the Drawings, if any;

.3 Drawings of larger scale shall govern over those of smaller scale; any special Drawing details shall govern over standard detail;

.4 Specifications shall govern over Drawings in matters of material or equipment specified; Drawings shall govern over Specifications in matters of construction or installation detail;

.5 Documents of later date shall always govern; except that

.6 the Owner's Bidding Documents shall govern over Contractor's Proposal; and

.7 the Contract shall govern over all other documents, regardless of their dates.

§ 1.2.2 ~~Organization of the Specifications into divisions, sections and articles, and arrangement of Drawings shall not control the Contractor in dividing the Work among Subcontractors or in establishing the extent of Work to be performed by any trade.~~Work not particularly detailed, marked or specified shall be the same as similar parts that are detailed, marked or specified. On certain Contract Documents, only a portion of the detail may be fully shown and the remainder indicated in outline, in which case the general detail shall be understood as applying also to other like portions of the Work. For example, if case carving, ornament, facing, veneer or similar treatment is indicated by starting of the detail, such detail must be continued throughout the course of parts in which it occurs, and to all similar parts in the Work wherever such general detail shall apply unless otherwise specifically provided in the Contract Documents.

§ 1.2.3 ~~Unless otherwise stated in the Contract Documents, words that have well-known technical or construction industry meanings are used in the Contract Documents in accordance with such recognized meanings.~~The organization of the specifications into divisions, selections, and/or articles, and the arrangement of the Drawings, shall not dictate to the Contractor in any way how the Work is to be divided among subcontractors, or establish the extent of Work to be performed by any trade. Similarly, the organization of the Contractor's duties into different phases or categories in the Contract is for convenience only and shall not limit the generality of the Contractor's obligation to provide all of the services whenever necessary.

§ 1.2.4 All references in the Contract Documents to standards (such as commercial standards, federal specifications, trade association standards or similar standards), whether for materials, processes, assemblies, workmanship, performance or any other purpose, shall mean, unless otherwise noted, the most recent available published version of such standard as of the date of that part of the Contract Documents bearing the reference. All standards referred to, except as modified in the Contract Documents, shall have the same force and effect as though printed therein. These standards will not be furnished to the Contractor, as the Contractor and all members of the Construction Team are required to be familiar with their requirements.

§ 1.2.5 Whenever a provision of the Contract Documents conflicts with agreements or regulations in force among members of trade associations, unions or councils, which regulate or distinguish the portions of the Work which shall or shall not be performed by a particular trade, the Contractor shall make necessary arrangements to reconcile the conflict without delay, damage, cost or recourse to the Owner. Delays in the Work resulting from the failure of the

AIA Document A201® – 2007. Copyright © 1911, 1915, 1918, 1925, 1937, 1951, 1958, 1961, 1963, 1966, 1970, 1976, 1987, 1997 and 2007 by The American Institute of Architects. All rights reserved. The "American Institute of Architects," "AIA," the AIA Logo, "A201," and "AIA Contract Documents" are registered trademarks and may not be used without permission. This document was produced by AIA software at 09:39:13 ET on 09/22/2020 under Order No.8752807719 which expires on 09/14/2021, is not for resale, is licensed for one-time use only, and may only be used in accordance with the AIA Contract Documents® Terms of Service. To report copyright violations, e-mail copyright@aia.org.
User Notes: (1516648771)

Contractor to use its best efforts to reconcile any such conflicts shall not result in an extension of the Contract Time and shall not result in the increase of the Contract Sum or Guaranteed Maximum Price.

§ 1.2.6 The Contractor acknowledges that there may be items of the Work, which the Contractor is responsible to provide under the Contract that are not drawn or specified in the Design but are necessary for the proper execution and completion of the Work and are consistent with and reasonably inferable from the Drawings and Specifications. All such items shall be provided as part of the Work without delay in its progress and without any increase in the Contract Sum or Guaranteed Maximum Price.

§ 1.3 CAPITALIZATION

Terms capitalized in these General Conditions include those that are (1) specifically defined, (2) the titles of numbered articles or (3) the titles of other documents published by the American Institute of Architects.

§ 1.4 INTERPRETATION

In the interest of brevity the Contract Documents frequently omit modifying words such as "all" and "any" and articles such as "the" and "an," but the fact that a modifier or an article is absent from one statement and appears in another is not intended to affect the interpretation of either statement.

§ 1.5 OWNERSHIP AND USE OF DRAWINGS, SPECIFICATIONS AND OTHER INSTRUMENTS OF SERVICE

§ 1.5.1 The ~~Architect and the Architect's consultants shall be deemed the authors and owners of their respective Instruments of Service, including the Drawings and Specifications, and will retain all common law, statutory and other reserved rights, including copyrights. The Contractor, Subcontractors, Sub-subcontractors, and material or equipment suppliers shall not own or claim a copyright in the Instruments of Service. Submittal or distribution to meet official regulatory requirements or for other purposes in connection with this Project is not to be construed as publication in derogation of the Architect's or Architect's consultants' reserved rights.~~Drawings, Specifications, Project Manual and all other documents, electronic or otherwise, and all data used in compiling, and the results of, any tests, surveys or inspections at the Project Site, as well as all photographs, drawings, specifications, schedules, data processing output, building information modeling (BIM), integrated project delivery (IPD) and/or computer-aided design/drafting (CADD) system disks/tapes, computations, studies, audits, reports, models and other items of like kind, and all intellectual property, prepared or created for or in connection with the Project, regardless of whether they were prepared by the Owner, the Contractor, the Architect, or a third party, shall constitute the Project Documents, and shall belong to the Owner.

§ 1.5.2 The Contractor, Subcontractors, Sub-subcontractors and material or equipment suppliers are authorized to use and reproduce the Instruments of Service provided to them solely and exclusively for execution of the Work. All copies made under this authorization shall bear the copyright notice, if any, shown on the Instruments of Service. The Contractor, Subcontractors, Sub-subcontractors, and material or equipment suppliers may not use the Instruments of ~~Service on other projects or for additions to this Project outside the scope of the Work~~ Service, or any other documents prepared for or in connection with the Project, or any concepts or ideas developed in connection with the Project, for any purpose other than the Project without the specific written consent of the ~~Owner, Architect and the Architect's consultants.~~ Owner. The Owner shall at all times have access to and control over the disposition of any Drawings, Specifications, and other documents pertaining to the Project.

§ 1.6 TRANSMISSION OF DATA IN DIGITAL FORM

If the parties ~~intend to transmit~~ transmit Project Documents or Instruments of Service or any other information or documentation in digital form, they shall ~~endeavor to~~ establish necessary protocols governing such transmissions, unless otherwise already provided in the ~~Agreement~~ Contract or the Contract Documents.

ARTICLE 2 OWNER

§ 2.1 GENERAL

§ 2.1.1 The Owner is the person or entity identified as such in the ~~Agreement~~ Contract and is referred to throughout the Contract Documents as if singular in number. The Owner shall designate in writing a representative who shall have express authority to bind the Owner with respect to all matters requiring the Owner's approval or authorization. Except as otherwise provided in Section 4.2.1, the Architect does not have such authority. The term "Owner" means the Owner or the Owner's authorized representative.

AIA Document A201® – 2007. Copyright © 1911, 1915, 1918, 1925, 1937, 1951, 1958, 1961, 1963, 1966, 1970, 1976, 1987, 1997 and 2007 by The American Institute of Architects. All rights reserved. The "American Institute of Architects," "AIA," the AIA Logo, "A201," and "AIA Contract Documents" are registered trademarks and may not be used without permission. This document was produced by AIA software at 09:39:13 ET on 09/22/2020 under Order No.8752807719 which expires on 09/14/2021, is not for resale, is licensed for one-time use only, and may only be used in accordance with the AIA Contract Documents® Terms of Service. To report copyright violations, e-mail copyright@aia.org.
User Notes: (1516648771)

§ 2.1.2 The Owner ~~shall furnish to the Contractor within fifteen days after receipt of a written request, information necessary and relevant for the Contractor to evaluate, give notice of or enforce mechanic's lien rights. Such information shall include a correct statement of the record legal title to the property on which the Project is located, usually referred to as the site, and the Owner's interest therein.~~may at any time and from time to time designate a third-party, such as an architect or engineer or other professional consultant, to perform any of its duties under the Contract. In the event of any such designation, the Owner shall provide written notice to the Contractor. The duties, responsibilities and limitations of authority of any third party designated by the Owner pursuant to Section 2.1.1, shall not be restricted, modified or extended without written consent of the Owner.

§ 2.2 INFORMATION AND SERVICES REQUIRED OF THE OWNER

§ 2.2.1 Prior to commencement of the Work, the Contractor may request in writing that the Owner provide reasonable evidence that the Owner has made financial arrangements to fulfill the Owner's obligations under the Contract. Thereafter, the Contractor may only request such evidence if (1) the Owner fails to make payments to the Contractor as the Contract Documents require; or (2) a change in the Work materially ~~changes the Contract Sum; or (3) the Contractor identifies in writing a reasonable concern regarding the Owner's ability to make payment when due. The~~ increases the Contract Sum. If requested in writing by the Contractor, the Owner shall furnish such evidence as a condition precedent to commencement or continuation of the Work or the portion of the Work affected by a material change. After the Owner furnishes the evidence, the Owner shall not materially vary such financial arrangements without prior notice to the Contractor.

§ 2.2.2 Except for permits and fees that are the responsibility of the Contractor under the Contract Documents, including those required under Section 3.7.1, the Owner shall secure and pay for necessary approvals, easements, assessments and charges required for construction, use or occupancy of permanent structures or for permanent changes in existing facilities. All permits, fees, licenses and approvals not specifically identified in the Contract or Contract Documents as the responsibility of the Owner shall be the responsibility of the Contractor.

§ 2.2.3 The Owner shall furnish surveys describing physical characteristics, legal limitations and utility locations for the site of the Project, and a legal description of the site. The Contractor shall be entitled to rely on the accuracy of information furnished by the Owner but shall exercise proper precautions relating to the safe performance of the Work. The Contractor shall immediately notify Owner and Architect of any errors, inaccuracies or problems which Contractor becomes aware of in the course of its use of the survey.

§ 2.2.4 ~~The~~ Upon written request, the Owner shall furnish information or services required of the Owner by the Contract Documents with reasonable promptness. The Owner shall also furnish any other information or services under the Owner's control and relevant to the Contractor's performance of the Work with reasonable promptness after receiving the Contractor's written request for such information or services.

§ 2.2.5 ~~Unless otherwise provided in the Contract Documents, the Owner shall furnish to the Contractor one copy of the Contract Documents for purposes of making reproductions pursuant to Section 1.5.2.~~

§ 2.3 OWNER'S RIGHT TO STOP THE WORK

If the Contractor fails to correct Work that is not in accordance with the requirements of the Contract Documents as required by Section 12.2 or ~~repeatedly~~ fails to carry out Work in accordance with the Contract Documents, the Owner may issue a written order to the Contractor to stop the Work, or any portion thereof, until the cause for such order has been eliminated; however, the right of the Owner to stop the Work shall not give rise to a duty on the part of the Owner to exercise this right for the benefit of the Contractor or any other person or entity, except to the extent required by Section 6.1.3. This right shall be in addition to and not in limitation of Owner's rights under any provision of the Contract Documents, and Owner's right to stop Work shall not relieve Contractor of any of its obligations under the Contract Documents.

§ 2.4 OWNER'S RIGHT TO CARRY OUT THE WORK

~~If the Contractor defaults or neglects to carry out the Work in accordance with the Contract Documents and fails within a ten-day period after receipt of written notice from the Owner to commence and continue correction of such default or neglect with diligence and promptness, the Owner may, without prejudice to other remedies the Owner may have, correct such deficiencies. In such case an appropriate Change Order shall be issued deducting from payments then or thereafter due the Contractor the reasonable cost of correcting such deficiencies, including Owner's expenses and compensation for the Architect's additional services made necessary by such default, neglect or failure. Such~~

AIA Document A201® – 2007. Copyright © 1911, 1915, 1918, 1925, 1937, 1951, 1958, 1961, 1963, 1966, 1970, 1976, 1987, 1997 and 2007 by The American Institute of Architects. All rights reserved. The "American Institute of Architects," "AIA," the AIA Logo, "A201," and "AIA Contract Documents" are registered trademarks and may not be used without permission. This document was produced by AIA software at 09:39:13 ET on 09/22/2020 under Order No.8752807719 which expires on 09/14/2021, is not for resale, is licensed for one-time use only, and may only be used in accordance with the AIA Contract Documents® Terms of Service. To report copyright violations, e-mail copyright@aia.org.
User Notes: (1516648771)

~~action by the Owner and amounts charged to the Contractor are both subject to prior approval of the Architect. If payments then or thereafter due the Contractor are not sufficient to cover such amounts, the Contractor shall pay the difference to the Owner.~~**§ 2.4.1** If the Contractor fails or defaults or neglects to carry out the Work in accordance with the Contract Documents and fails within a five-day period after receipt of written notice from the Owner or the Owner's designee to commence and continue correction of such failure, default or neglect with diligence and promptness, the Owner may, without prejudice to other remedies the Owner may have, correct such deficiencies, including any claim against the Contractor's Performance Bond, correct such deficiencies. In the event the Contractor's failure, default or neglect results in a threat to the safety of persons or property, the Contractor shall immediately correct such failure, default or neglect; otherwise, the Owner may undertake the same actions as permitted in the prior sentence. In such case an appropriate Change Order shall be issued deducting from payments then or thereafter due the Contractor the reasonable cost of correcting such deficiencies, including any and all legal expenses incurred to effectuate and enforce this provision, including Owner's expenses and compensation for the Architect's additional services made necessary by such default, neglect or failure. Such action by the Owner and amounts charged to the Contractor are both subject to prior approval of the Architect. In the event the Owner directs another entity to perform Work pursuant to this Section that otherwise is the obligation of the Contractor, including correction of safety violations, either at the Contractor's request or as a result of the Contractor's failure to perform such Work, that other entity shall charge the Contractor all costs for labor, material and equipment plus that other entity's administrative, profit and overhead costs. The Contractor shall pay that other entity within ten (10) days of the date of invoice. If not paid within ten (10) days, the Contractor authorizes the Owner to withhold that amount from the Contractor and to pay the same to that other entity from the next payment due the Contractor. If payments then or thereafter due the Contractor are not sufficient to cover such amounts, the Contractor shall pay the difference to the Owner.

§ 2.4.2 Upon notification to the Contractor, the Owner shall have the right to place and install equipment and machinery during the progress of the Work before the completion of the various parts of the Work. Such placing and installing of equipment and machinery shall not in any way evidence the completion of the Work or any portion thereof by the Contractor, nor signify the Owner's acceptance of the Work or any portion thereof. If the Owner places or installs such equipment and machinery with its own forces, the Owner shall be responsible for any damage to Work of the Contractor caused by the Owner's workers. If the Owner engages another contractor for such placement or installation, the Owner shall require said contractor to be responsible for such damages caused by its work, its workers, or its subcontractor(s). Upon discovery of any such damage, Contractor shall immediately notify Owner in writing.

§2.5 LIMITATION ON OWNER'S RESPONSIBILITY

§2.5.1 The Owner and Architect will not, under any circumstances, have control over or charge of and will not be responsible for construction means, methods, techniques, sequences or procedures, or for safety precautions and programs in connection with the Work, since these are solely the Contractor's responsibility. Owner and Architect will not be responsible for the Contractor's failure to carry out the Work in accordance with the Contract Documents except the Architect shall provide services at no additional cost, made necessary by major defect or deficiencies in the Work of the Contractor(s) which, through reasonable care, should have been discovered by the Architect and promptly reported to the Owner and the Contractor(s), but which the Architect failed to so discover and/or report. Additionally, any design or Specification error furnished by the Architect shall be promptly corrected by the Architect at no cost to the Owner.. The Owner will not have control over or charge of and will not be responsible for acts or omissions of any member of the Construction Team.

§2.5.2 The Contractor shall only be entitled to rely upon instructions and directions provided by the Owner's authorized representative(s).

§2.5.3 The Owner may, in addition to delivering them to the Architect, from time to time review and approve or take other appropriate action upon the Contractor's submittals, such as Shop Drawings, Product Data and Samples, but only for the limited purpose of checking for conformance with the Owner's objectives and goals. Review of such submittals will not be conducted for the purpose of determining their accuracy and completeness of details, such as dimensions and quantities, or for substantiating instructions for installation or performance of equipment or systems, all of which remain the responsibility of the Contractor. The Owner's review and approval of or taking other appropriate action on the Contractor's submittals shall not relieve the Contractor or the Architect of any of their obligations. The Owner's approval of a specific item shall not indicate approval of an assembly of which the item is a component. The Owner's receipt of any informational submittals, of any submittals relating to equipment or system

AIA Document A201® – 2007. Copyright © 1911, 1915, 1918, 1925, 1937, 1951, 1958, 1961, 1963, 1966, 1970, 1976, 1987, 1997 and 2007 by The American Institute of Architects. All rights reserved. The "American Institute of Architects," "AIA," the AIA Logo, "A201," and "AIA Contract Documents" are registered trademarks and may not be used without permission. This document was produced by AIA software at 09:39:13 ET on 09/22/2020 under Order No.8752807719 which expires on 09/14/2021, is not for resale, is licensed for one-time use only, and may only be used in accordance with the AIA Contract Documents® Terms of Service. To report copyright violations, e-mail copyright@aia.org.
User Notes: (1516648771)

designed by the Contractor, or of any submittals relating to alternatives proposed by any member of the Construction Team shall not constitute approval of or action by the Owner on such submittals. All such submittals will be received by the Owner for record purposes only.

§2.5.4 The Owner may from time to time review or observe or take other appropriate action concerning the Work and any documents, and the selection of Subcontractors and Suppliers. The Owner's doing so shall be solely for the limited purpose of providing the Contractor with information as to how such items relate to the Owner's objectives and goals with respect to the Work and not for the purpose of determining their accuracy and completeness and shall in no way create any responsibility on the part of the Owner for or complicity by the Owner in errors, inconsistencies, or omissions, nor shall any such review, approval, other action or payment of the Contractor alter or in any way reduce the Contractor's obligations under the Contract.

ARTICLE 3 CONTRACTOR

§ 3.1 GENERAL

§ 3.1.1 The Contractor is the person or entity identified as such in the ~~Agreement~~ Contract and is referred to throughout the Contract Documents as if singular in number. The Contractor is the primary (main) contractor who oversees and is responsible for all the Work performed on the Project, and to whom any and all subcontractors on the Project are responsible. The Contractor shall be lawfully licensed, if required in the jurisdiction where the Project is located. The Contractor shall designate in writing a representative who shall have express authority to bind the Contractor with respect to all matters under this Contract. The term "Contractor" means the Contractor or the Contractor's authorized representative.

§ 3.1.2 The Contractor shall perform the Work in accordance with the Contract Documents.

§ 3.1.3 The Contractor shall not be relieved of obligations to perform the Work in accordance with the Contract Documents either by activities or duties of the Owner or the Architect in the Architect's administration of the Contract, or by tests, inspections or approvals required or performed by persons or entities other than the Contractor.

§ 3.1.4 These General Conditions refer to the relationship between the Owner and Contractor. As to the contract between the Contractor and its Sub-Contractors, the General Conditions shall be read as the Contractor having the position of the Owner and the Sub-Contractors having the position of the Contractor. The Sub-Contractors are bound to the Contractor just as the Contractor is bound to the Owner. The Sub-Contractor shall have all the rights, duties and obligations to the Contractor as the Contractor has rights, duties and obligations to the Owner. The Sub-Contractors shall agree to and accept the same responsibility to the Owner as the Contractor. In the event any failure of a Sub-Contractor causes any type of injury or loss to the Owner, direct or indirect, the Contractor shall be jointly and severally liable to the Owner for such injury or damage in addition to any responsibility or liability of the Sub-Contractor.

§ 3.2 REVIEW OF CONTRACT DOCUMENTS AND FIELD CONDITIONS BY CONTRACTOR

§ 3.2.1 Execution of the Contract by the Contractor is a representation that the Contractor has visited the site, become generally familiar with local conditions (including weather conditions) under which the Work is to be performed and correlated personal observations with requirements of the Contract Documents.

§ 3.2.2 Because the Contract Documents are complementary, the Contractor shall, before starting each portion of the Work, carefully study and compare the various Contract Documents relative to that portion of the Work, as well as the information furnished by the Owner pursuant to Section 2.2.3, shall take field measurements of any existing conditions related to that portion of the Work, and shall observe any conditions at the site affecting it. These obligations are for the purpose of facilitating coordination and construction by the Contractor and are not for the purpose of discovering errors, omissions, or inconsistencies in the Contract ~~Documents; however, the~~ Documents. The Contractor shall promptly report to the Owner and Architect any errors, inconsistencies or omissions discovered by or made known to the Contractor as a request for information in such form as the Owner and Architect may require. It is recognized that the Contractor's review is made in the Contractor's capacity as a contractor and not as a licensed design professional, unless otherwise specifically provided in the Contract Documents. Failure by the Contractor to report to, or request clarification from, the Owner and Architect of any errors, omissions or inconsistencies shall result in interpreting and resolving such errors, omissions or inconsistencies in favor of the Owner and with no additional compensation to the Contractor.

AIA Document A201® – 2007. Copyright © 1911, 1915, 1918, 1925, 1937, 1951, 1958, 1961, 1963, 1966, 1970, 1976, 1987, 1997 and 2007 by The American Institute of Architects. All rights reserved. The "American Institute of Architects," "AIA," the AIA Logo, "A201," and "AIA Contract Documents" are registered trademarks and may not be used without permission. This document was produced by AIA software at 09:39:13 ET on 09/22/2020 under Order No.8752807719 which expires on 09/14/2021, is not for resale, is licensed for one-time use only, and may only be used in accordance with the AIA Contract Documents® Terms of Service. To report copyright violations, e-mail copyright@aia.org.
User Notes: (1516648771)

§ 3.2.3 The Contractor is not required to ascertain that the Contract Documents are in accordance with ~~applicable laws, statutes, ordinances, codes, rules and regulations, or lawful orders of public authorities,~~ Applicable Laws, but the Contractor shall promptly report to the Architect any nonconformity discovered by or made known to the Contractor as a request for information in such form as the Architect may require.

§ 3.2.4 If the Contractor believes that additional cost or time is involved because of clarifications or instructions the Architect issues in response to the Contractor's notices or requests for information pursuant to Sections 3.2.2 or 3.2.3, the Contractor shall make Claims as provided in Article 15. If the Contractor fails to perform the obligations of Sections 3.2.2 or 3.2.3, the Contractor shall pay such costs and damages to the Owner as would have been avoided if the Contractor had performed such obligations. If the Contractor ~~performs those obligations,~~ permits any construction activity to be performed that involves an error, inconsistency or omission in the Contract Documents or a physical condition at the Project Site it recognized or should, employing the degree of diligence required of that Contractor under the Contract Documents, have recognized without providing notice to the Owner and receiving authorization to proceed, the Contractor shall assume responsibility for such performance and bear all costs attributable to correction, without recovery, whether under the Contract Sum, Guaranteed Maximum Price or otherwise. If the Contractor performs the obligations of Sections 3.2.2 and 3.2.3, the Contractor shall not be liable to the Owner or Architect for damages resulting from errors, inconsistencies or omissions in the Contract ~~Documents,~~ Documents or for differences between field measurements or conditions and the ~~Contract Documents, or for nonconformities of the Contract Documents to applicable laws, statutes, ordinances, codes, rules and regulations, and lawful orders of public authorities.~~Construction Documents unless the Contractor recognized such errors, inconsistency, omission or difference and knowingly failed to report such to the Owner and Architect.

§ 3.2.5 Except and only to the extent otherwise provided in Section 2.2.3, by signing the Contract, the Contractor agrees: (1) to bear the risk of concealed or unknown conditions, if any, which may be encountered in performing the Work; and (2) that the established Contract Sum or Guaranteed Maximum Price accepted this responsibility with full knowledge of this risk. In agreeing to bear the risk of concealed or unknown conditions to the extent herein provided, the Contractor understands that, except and only to the extent provided otherwise in Section 2.2.3 or Section 4.3.4, concealed and/or unknown conditions shall not excuse the Contractor from its obligation to achieve full completion of the Work within the Contract Time, and shall not entitle the Contractor to an adjustment of the Contract Sum or Guaranteed Maximum Price. Except as provided in Section 2.2.3: (1) the Owner has not determined the accuracy or completeness of any information it may provide concerning physical conditions at the Project site, and all such information is made available to the Contractor, and shall by the Contractor be made available to bidders without any representation or warranty by the Owner whatsoever as to its accuracy, completeness, or relevancy; (2) the Contractor and the bidders shall independently evaluate such information for their use and shall be solely responsible for use or interpretation of such information; (3) any such use or interpretation shall not be the basis of any claim whatsoever against the Owner.

§ 3.2.6 If the Contractor encounters concealed or unknown conditions that differ materially from those anticipated or expected, the Contractor shall promptly notify the Owner, in writing of such conditions so that the Owner can determine if such conditions require design details, which differ from those design details shown in the Design or some other remedial action. The Contractor shall be liable to the Owner for any extra costs incurred as the result of the Contractor's failure to give such required notice.

§ 3.3 SUPERVISION AND CONSTRUCTION PROCEDURES

§ 3.3.1 The Contractor shall supervise and direct the Work, using the Contractor's best skill and attention. The Contractor shall be solely responsible for, and have control over, construction means, methods, techniques, sequences and procedures and for coordinating all portions of the Work under the Contract, unless the Contract Documents give other specific instructions concerning these matters. If the Contract Documents give specific instructions concerning construction means, methods, techniques, sequences or procedures, the Contractor shall evaluate the jobsite safety thereof and, except as stated below, shall be fully and solely responsible for the jobsite safety of such means, methods, techniques, sequences or procedures. If the Contractor determines that such means, methods, techniques, sequences or procedures may not be safe, the Contractor shall give timely written notice to the Owner and Architect and shall not proceed with that portion of the Work without further written instructions from the Architect. If the Contractor is then instructed in writing to proceed with the required means, methods, techniques, sequences or procedures without acceptance of changes proposed by the Contractor, the Owner shall be solely responsible for any loss or damage arising solely from those Owner-required means, methods, techniques, sequences or procedures.

AIA Document A201® – 2007. Copyright © 1911, 1915, 1918, 1925, 1937, 1951, 1958, 1961, 1963, 1966, 1970, 1976, 1987, 1997 and 2007 by The American Institute of Architects. All rights reserved. The "American Institute of Architects," "AIA," the AIA Logo, "A201," and "AIA Contract Documents" are registered trademarks and may not be used without permission. This document was produced by AIA software at 09:39:13 ET on 09/22/2020 under Order No.8752807719 which expires on 09/14/2021, is not for resale, is licensed for one-time use only, and may only be used in accordance with the AIA Contract Documents® Terms of Service. To report copyright violations, e-mail copyright@aia.org.
User Notes: (1516648771)

§ 3.3.2 The Contractor shall be responsible to the Owner for acts and omissions of the Contractor's employees, Subcontractors and Sub-subcontractors at any tier, and their respective agents and employees, and any other persons or entities performing portions of the Work for, or on behalf of, the Contractor or any of its ~~Subcontractors.~~ Subcontractors or Sub-subcontractors at any tier. References in the Contract Documents to the Work, obligations or acts or omissions of Contractor shall be interpreted to apply to the Subcontractors, Sub-subcontractors at any tier, suppliers, materialmen, and those employees and agents, irrespective if they are identified.

§ 3.3.3 The Contractor shall be responsible for inspection of portions of Work already performed to determine that such portions are in proper condition to receive subsequent Work.

§ 3.4 LABOR AND MATERIALS

§ 3.4.1 Unless otherwise provided in the Contract Documents, the Contractor shall provide and pay for labor, materials, equipment, tools, construction equipment and machinery, water, heat, utilities, transportation, and other facilities and services necessary for proper execution and completion of the Work, whether temporary or permanent and whether or not incorporated or to be incorporated in the Work. Such provision of labor and materials shall occur in sufficient time to satisfy the existing Project Schedule. The Contractor bears the risk of any failure to timely provide such labor and materials for any reason. The Contractor agrees to execute the appropriate UCC forms to effectuate the Owner's ownership of the material and equipment furnished pursuant to this Contract to the extent the Owner has paid for services rendered.

§ 3.4.2 Except in the case of minor changes in the Work authorized by the Architect in accordance with Sections 3.12.8 or 7.4, the Contractor may make substitutions only with the prior written consent of the Owner, after evaluation by the Architect and in accordance with a Change Order or Construction Change Directive.

§ 3.4.2.1 By making requests for substitutions based on Subparagraph 3.4.2 above, the Contractor:

(1) Represents that the Contractor has personally investigated the proposed substitute product and determined that it is equal or superior in all respects to that specified.

(2) Represents that the Contractor will provide the same warranty for the substitution that the Contractor would for that specified.

(3) Certifies that the cost data presented is complete and includes all related costs, including but not limited to the Architect's redesign costs; and waives all claims for additional costs related to the substitution which subsequently became apparent; and

(4) Will coordinate the installation of the accepted substitute, making such changes as may be required for the Work to be completed in all respects.

§ 3.4.3 The Contractor shall enforce strict discipline and good order among the Contractor's employees and other persons carrying out the Work. The Contractor shall not permit employment of unfit persons or persons not properly skilled in tasks assigned to them.

§ 3.4.3.1 The Contractor shall only employ labor on the Project or in connection with the Work capable of working harmoniously with all trades, crafts and any other contractors and individuals associated with the Project. The Contractor shall also minimize the likelihood of any strike, work stoppage or other labor disturbance.

§ 3.4.3.2 If the Work is to be performed by Trade Unions, the Contractor shall make all necessary arrangements to reconcile, without delay, damage or cost to the Owner and without recourse to the Architect or the Owner, any conflict between the Contract Documents and any agreements or regulations of any kind which regulate, control or distinguish what activities shall or shall not be included in the Work of any particular trade.

§ 3.4.3.3 The Contractor shall cause pre-purchased equipment and material to be delivered to the Project Site or temporarily stored to assure coordination with other trades. The Contractor shall be responsible to verify that such equipment is in accordance with the Specifications.

AIA Document A201® – 2007. Copyright © 1911, 1915, 1918, 1925, 1937, 1951, 1958, 1961, 1963, 1966, 1970, 1976, 1987, 1997 and 2007 by The American Institute of Architects. All rights reserved. The "American Institute of Architects," "AIA," the AIA Logo, "A201," and "AIA Contract Documents" are registered trademarks and may not be used without permission. This document was produced by AIA software at 09:39:13 ET on 09/22/2020 under Order No.8752807719 which expires on 09/14/2021, is not for resale, is licensed for one-time use only, and may only be used in accordance with the AIA Contract Documents® Terms of Service. To report copyright violations, e-mail copyright@aia.org.
User Notes: (1516648771)

§ 3.4.3.4 To the extent practicable, materials and equipment will be delivered to the Project site in original containers or wrappings. Used materials or equipment will not be permitted to be incorporated into the Work without the written approval of the Architect and the Owner or unless specifically permitted or required by the Contract Documents. The Architect and the Owner shall have the right to have any such improperly used materials or equipment removed from the Project site or completed Work whenever detected. The Architect's or Owner's failure to detect such used materials or equipment shall not relieve the Contractor of its obligations under this paragraph. Neither the Architect nor the Owner shall have any obligation to inspect for or improperly detect used materials or equipment.

§ 3.4.5 ASBESTOS, PCB, and Urea Formaldehyde-Free Product Installation.

§ 3.4.5.1 It is hereby understood and agreed that no product, substance, or material containing or treated with asbestos, including chrysolite, amosite, crocidolite, tremolite asbestos, anthophyllite asbestos, actinolite asbestos, asbestos in vermiculite, erionite, and taconite (hereinafter collectively "asbestos"), polychlorinated biphenyls (PCB), or urea formaldehyde and any combination of these substances shall be installed or introduced into the Work by the Contractor, its employees, Subcontractors, Sub-subcontractors at any tier, and their respective agents and employees, and other persons performing portions of the Work for, or on behalf of, the Contractor or any of its Subcontractors or Sub-subcontractors at any tier or other individuals or entities over whom the Contractor has control. The Contractor shall be required to provide a signed certification statement ensuring that all products or materials installed or introduced into the Work all be asbestos, PCB, and Urea Formaldehyde-free.

§3.4.5.2 The Contractor shall also be required to furnish certified statements from the manufacturers of supplied materials used during construction verifying their products or materials to be asbestos, PCB, and Urea-Formaldehyde-free in accordance with the requirements of Section 3.4.5.1.

§3.4.5.3 The Contractor shall complete and submit to the Owner a certification evidencing asbestos, PCB, and Urea Formaldehyde-free product and material installation prior to issuance of the final Certificate for Payment, in a form acceptable to the Owner.

§ 3.5 WARRANTY

The Contractor warrants to the Owner and Architect that materials and equipment furnished under the Contract will be of good quality and new unless the Contract Documents require or permit otherwise. The Contractor further warrants that the Work will conform to the requirements of the Contract Documents and will be free from ~~defects, except for those inherent in the quality of the Work the Contract Documents require or permit.~~ defects. Work, materials, or equipment not conforming to these requirements may be considered defective. The Contractor's warranty excludes remedy for damage or defect caused by abuse, alterations to the Work not executed by the Contractor, improper or insufficient maintenance, improper operation, or normal wear and tear and normal usage. If required by the Architect, the Contractor shall furnish satisfactory evidence as to the kind and quality of materials and equipment. All warranties shall be in the form and substance required by the Owner and/or Contract Documents.

In addition to any other warranties, guarantees or obligations set forth in the Contract Documents or applicable as a matter of a law and not in limitation of the terms of the Contract Documents, the Contractor warrants and guarantees that:

.1 The Owner will have good title to the Work and all materials and equipment incorporated into the Work and, unless otherwise expressly provided in the Contract Documents, will be new;

.2 The Work and all materials and equipment incorporated into the Work will be free from all defects, including any defects in workmanship or materials;

.3 The Work and all equipment incorporated into the Work will be fit for the purpose for which they are intended;

.4 The Work and all materials and equipment incorporated into the Work will be merchantable; and

.5 The Work and all materials and equipment incorporated into the Work will conform in all respects to the Contract Documents.

Upon notice of the breach of any of the foregoing warranties or guarantees or any other warranties or guarantees under the Contract Documents, the Contractor, in addition to any other requirements in the Contract Documents, will commence to correct such breach within seventy-two (72) hours after written notice thereof and thereafter will use its best efforts to correct such breach to the satisfaction of the Owner; provided that if such notice is given after final

AIA Document A201® – 2007. Copyright © 1911, 1915, 1918, 1925, 1937, 1951, 1958, 1961, 1963, 1966, 1970, 1976, 1987, 1997 and 2007 by The American Institute of Architects. All rights reserved. The "American Institute of Architects," "AIA," the AIA Logo, "A201," and "AIA Contract Documents" are registered trademarks and may not be used without permission. This document was produced by AIA software at 09:39:13 ET on 09/22/2020 under Order No.8752807719 which expires on 09/14/2021, is not for resale, is licensed for one-time use only, and may only be used in accordance with the AIA Contract Documents® Terms of Service. To report copyright violations, e-mail copyright@aia.org.
User Notes: (1516648771)

payment hereunder, such seventy-two (72) hour period shall be extended to seven (7) days. The foregoing warranties and obligations of the Contractor shall survive the final payment and/or termination of the Contract.

§ 3.5.1 The Contractor shall assign to the Owner at the time of Substantial Completion any and all manufacturer's warranties relating to materials and labor used in the Work. Contractor shall perform the Work in a manner that will preserve any and all manufacturer's warranties.

§ 3.5.2 If the Contractor uses any portion of the Work or the Owner's other property, such items will be restored to the condition they were in immediately prior to such use at or before the time of Substantial Completion, or as otherwise specified in the Contract Documents. The Contractor's warranty and agreement to correct defective Work includes the Contractor's obligations under this section.

§ 3.6 TAXES

The Contractor shall pay sales, consumer, use and similar taxes for the Work or portions thereof provided by the Contractor that are legally enacted when bids are received or negotiations concluded, whether or not yet effective or merely scheduled to go into effect. The Contract Sum includes all such applicable taxes and the Contract Sum shall not be modified as a result of Contractor's failure to include all applicable taxes, or a change in Contractor's tax liability. The Contractor shall pay all state and federal taxes levied on its business, income or property and shall make all contributions for social security and other wage or payroll taxes. The Contractor shall be solely responsible for such payments and shall indemnify the Owner and hold it harmless from any assessment and payment of the same. Notwithstanding the foregoing, in the event any federal, state or local taxes are revised, changed or amended, the Contractor shall comply with all such revised, changed or amended taxes, provided however, to the extent such revisions, changes or amendments to such applicable taxes cause a material increase to Contractor's Contract Sum, the Owner and Contractor agree to negotiate in good faith a mutual agreeable reasonable adjustment, if any, to the Contractor's Contract Sum hereunder.

§ 3.7 ~~PERMITS, FEES, NOTICES AND COMPLIANCE WITH LAWS~~
PERMITS, FEES, NOTICES, AND COMPLIANCE WITH LAWS

§ 3.7.1 Unless otherwise provided in the Contract Documents, the Contractor shall secure and pay for the building permit ~~as well as for other permits, fees, licenses, and inspections by government agencies necessary for proper execution and completion of the Work that are customarily secured after execution of the Contract and legally required at the time bids are received or negotiations concluded.~~and other permits, governmental fees, licenses and inspections by governmental agencies necessary for the proper execution, completion and occupancy of the Work, including without limitation, all connection charges, assessments and inspection fees imposed by the Michigan Bureau of Construction Codes, the Michigan Bureau of Fire Safety, any municipal agency or utility company. All such permit fees and charges are included in the Contractor's Contract Sum or Guaranteed Maximum Price.

§ 3.7.2 The Contractor shall comply with and give notices required by ~~applicable laws, statutes, ordinances, codes, rules and regulations, and lawful orders of public authorities applicable to~~ Applicable Laws regarding the performance of the Work.

§ 3.7.3 If the Contractor performs Work knowing it to be contrary to ~~applicable laws, statutes, ordinances, codes, rules and regulations, or lawful orders of public authorities,~~ Applicable Laws, the Contractor shall assume appropriate responsibility for such Work and shall bear the costs attributable to correction.

§ 3.7.4 ~~Concealed or Unknown Conditions.~~ ~~If the Contractor encounters conditions at the site that are (1) subsurface or otherwise concealed physical conditions that differ materially from those indicated in the Contract Documents or (2) unknown physical conditions of an unusual nature, that differ materially from those ordinarily found to exist and generally recognized as inherent in construction activities of the character provided for in the Contract Documents, the Contractor shall promptly provide notice to the Owner and the Architect before conditions are disturbed and in no event later than 21 days after first observance of the conditions. The Architect will promptly investigate such conditions and, if the Architect determines that they differ materially and cause an increase or decrease in the Contractor's cost of, or time required for, performance of any part of the Work, will recommend an equitable adjustment in the Contract Sum or Contract Time, or both. If the Architect determines that the conditions at the site are not materially different from those indicated in the Contract Documents and that no change in the terms of the Contract is justified, the Architect shall promptly notify the Owner and Contractor in writing, stating the reasons. If either party disputes the Architect's determination or recommendation, that party may proceed as provided in Article~~

AIA Document A201® – 2007. Copyright © 1911, 1915, 1918, 1925, 1937, 1951, 1958, 1961, 1963, 1966, 1970, 1976, 1987, 1997 and 2007 by The American Institute of Architects. All rights reserved. The "American Institute of Architects," "AIA," the AIA Logo, "A201," and "AIA Contract Documents" are registered trademarks and may not be used without permission. This document was produced by AIA software at 09:39:13 ET on 09/22/2020 under Order No.8752807719 which expires on 09/14/2021, is not for resale, is licensed for one-time use only, and may only be used in accordance with the AIA Contract Documents® Terms of Service. To report copyright violations, e-mail copyright@aia.org.
User Notes: (1516648771)

~~15.~~ The Contractor shall notify the municipality, public utilities, agencies, Miss Dig and the Owner in a timely manner so as to allow reasonable response time before digging any tunnels or similar underground work, and shall protect all existing utilities, sidewalks, streets, and similar improvements while performing the Work.

§ 3.7.5 If, in the course of the Work, the Contractor encounters human remains or recognizes the existence of burial markers, archaeological sites or wetlands not indicated in the Contract Documents, the Contractor shall immediately suspend any operations that would affect them and shall notify by providing written and dated notification the Owner and Architect. Upon receipt of such notice, the Owner shall promptly take any action necessary to obtain governmental authorization required to resume the operations. The Contractor shall continue to suspend such operations until otherwise instructed by the Owner but shall continue with all other operations that do not affect those remains or ~~features.~~ features, as needed. Requests for adjustments in the Contract Sum and Contract Time arising from the existence of such remains or features may be made as provided in Article 15.

§ 3.8 ALLOWANCES

§ 3.8.1 The Contractor shall include in the Contract Sum all allowances stated in the Contract Documents. Items covered by allowances shall be supplied for such amounts and by such persons or entities as the Owner may direct, but the Contractor shall not be required to employ persons or entities to whom the Contractor has reasonable objection.

§ 3.8.2 Unless otherwise provided in the Contract Documents,

.1 ~~Allowances~~ allowances shall cover the cost to the Contractor of materials and equipment delivered at the site and all required taxes, less applicable trade discounts;

.2 Contractor's costs for unloading and handling at the site, labor, installation costs, overhead, profit and other expenses contemplated for stated allowance amounts shall be included in the Contract Sum but not in the allowances; and

.3 ~~Whenever~~ whenever costs are more than or less than allowances, the Contract Sum shall be adjusted accordingly by Change Order. The amount of the Change Order shall reflect (1) the difference between actual costs and the allowances under Section 3.8.2.1 and (2) changes in Contractor's costs under Section 3.8.2.2.

§ 3.8.3 Materials and equipment under an allowance shall be selected by the Owner ~~with reasonable promptness.~~in sufficient time to avoid delay in the Work.

§ 3.9 SUPERINTENDENT

§ 3.9.1 The Contractor shall employ a competent superintendent and necessary assistants who shall be in attendance at the Project site during performance of the Work. The superintendent shall represent the Contractor, and communications given to the superintendent shall be as binding as if given to the Contractor. The superintendent shall be satisfactory to the Owner in all respects, and the Owner shall have the right to require the Contractor to remove any superintendent from the Project whose performance is not satisfactory to the Owner and to replace such superintendent with a superintendent who is satisfactory to the Owner; provided the request is made in good faith and for cause.

§ 3.9.2 The Contractor, as soon as practicable after award of the Contract, shall furnish in writing to the Owner and Architect through the Architect the name and qualifications of a proposed superintendent. The Architect may reply within 14 days to the Contractor in writing stating (1) whether the Owner or the Architect has reasonable objection to the proposed superintendent or (2) that the Architect requires additional time to review. Failure of the Architect to reply within the 14 day period shall constitute notice of no reasonable objection.

§ 3.9.3 The Contractor shall not employ a proposed superintendent to whom the Owner or Architect has made reasonable and timely objection. The Contractor shall not change the superintendent without the Owner's prior written consent, which shall not unreasonably be withheld or ~~delayed.~~ delayed except with another superintendent who is satisfactory to the Owner.

§ 3.10 CONTRACTOR'S CONSTRUCTION SCHEDULES

§ 3.10.1 The Contractor, as part of its Contract Sum or Guaranteed Maximum Price, promptly after being awarded the Contract or at other times requested by Owner or set forth in the Contract, shall prepare and submit for the Owner's and Architect's information a Contractor's proposed construction schedule for the Work. The schedule shall not exceed time limits current under the Contract Documents, shall be revised at appropriate intervals as required by the

AIA Document A201® – 2007. Copyright © 1911, 1915, 1918, 1925, 1937, 1951, 1958, 1961, 1963, 1966, 1970, 1976, 1987, 1997 and 2007 by The American Institute of Architects. All rights reserved. The "American Institute of Architects," "AIA," the AIA Logo, "A201," and "AIA Contract Documents" are registered trademarks and may not be used without permission. This document was produced by AIA software at 09:39:13 ET on 09/22/2020 under Order No.8752807719 which expires on 09/14/2021, is not for resale, is licensed for one-time use only, and may only be used in accordance with the AIA Contract Documents® Terms of Service. To report copyright violations, e-mail copyright@aia.org.
User Notes: (1516648771)

conditions of the Work and Project, shall be related to the entire Project to the extent required by the Contract Documents, and shall provide for expeditious and practicable execution of the ~~Work.~~Work in accordance with Project Manual or Bid Documents.

§ 3.10.2 ~~The Contractor shall prepare a submittal schedule, promptly after being awarded the Contract and thereafter as necessary to maintain a current submittal schedule, and shall submit the schedule(s) for the Architect's approval. The Architect's approval shall not unreasonably be delayed or withheld. The submittal schedule shall (1) be coordinated with the Contractor's construction schedule, and (2) allow the Architect reasonable time to review submittals. If the Contractor fails to submit a submittal schedule, the Contractor shall not be entitled to any increase in Contract Sum or extension of Contract Time based on the time required for review of submittals.~~

Except with the Owner's prior written approval, the Construction Schedule shall contain any Milestones and deadlines established in the Project Manual or Bid Documents. Once approved by the Owner, the Construction Schedule shall be reviewed monthly or at appropriate intervals as required by the conditions of the Work. **§ 3.10.3** The ~~Contractor shall perform the Work in general accordance with the most recent schedules submitted to the Owner and Architect.~~ Construction Schedule shall be in a detailed format satisfactory to the Owner which shall also: (1) provide a graphic representation coordinating and sequencing all activities and events that will occur during performance of the Work; (2) identify each phase of construction and occupancy; (3) set forth Milestone Dates and manpower loading.

§ 3.10.4 The Construction Schedule shall allow for and depict the following:

.1 Local weather conditions;

.2 Local jurisdictional or other work restrictions;

.3 Specific restrictions, constraints and Contract completion dates stipulated in the Contract Documents;

.4 Intermediate completion dates stipulated in the Contract Documents;

.5 Time for needed submittals by the Contractor and needed approvals by the Owner, Architect, or other agency or authority;

.6 Owner, Architect, or other agency or authority inspections and/or tests where required by the Contract Documents;

.7 The work of separate contractors or the Owner;

.8 Necessary resources to accomplish the Work within the Contract Time;

.9 Other information that may be provided by the Architect or the Owner; and

.10 A legend for each report or chart which clearly identifies how to interpret each.

§ 3.10.5 Upon review and acceptance by the Owner, the Construction Schedule shall be deemed part of the Contract Documents and shall not be subject to change except in accordance with Section 8.3 and Article 7. If it is not approved, the Construction Schedule shall be promptly revised by the Contractor in accordance with the recommendations of the Owner and Architect and resubmitted for approval.

.1 the Construction Schedule, subject to any modification granted in accordance with the Contract, shall constitute the Contractor's scheduling commitment to the Owner. It shall also serve as the basis for the Contractor's Contract Sum or Guaranteed Maximum Price.

.2 The Contractor shall meet at least bi-weekly with the persons providing labor or materials under each trade package to review their progress and take appropriate action to maintain the Construction Schedule.

AIA Document A201® – 2007. Copyright © 1911, 1915, 1918, 1925, 1937, 1951, 1958, 1961, 1963, 1966, 1970, 1976, 1987, 1997 and 2007 by The American Institute of Architects. All rights reserved. The "American Institute of Architects," "AIA," the AIA Logo, "A201," and "AIA Contract Documents" are registered trademarks and may not be used without permission. This document was produced by AIA software at 09:39:13 ET on 09/22/2020 under Order No.8752807719 which expires on 09/14/2021, is not for resale, is licensed for one-time use only, and may only be used in accordance with the AIA Contract Documents® Terms of Service. To report copyright violations, e-mail copyright@aia.org.
User Notes: (1516648771)

.3 the accepted Construction Schedule shall be updated (1) monthly to compare actual progress with projected progress and (2) at any other time if requested by the Owner. The updated Construction Schedule shall reflect the status of the Project's progress at the date of update and the Contractor's planned progress of remaining portions of the Work.

.4 The Contractor shall develop recovery schedules when milestone dates are or may be at risk.

.5 The Contractor is responsible for the completeness of the Construction Schedule. The Contractor shall confirm in writing, with each submission of the Construction Schedule, that the Contractor has reviewed the Construction Schedule with Subcontractors and Suppliers and has coordinated and allowed for the lead times associated with the delivery of materials or equipment required for the proper progress of the Work.

.6 The sequence of activities in the Construction Schedule will reflect the Contractor's intended approach to the execution of and completion of the Work. The Construction Schedule shall be broken into work areas to provide for a clear identification of the Planned Progress of the Work.

.7 The Owner's or the Architect's review of Construction Schedule shall not constitute or imply the acceptance of or relieve the Contractor of the responsibility for the means, methods, sequences, techniques or procedures used in the performance of the Work.

.8 The Construction Schedule shall represent the Contractor's plan for organizing, directing, managing, controlling, staffing and executing the Work required by the Contract Documents. The Owner shall have the right to rely on such Construction Schedule to coordinate and otherwise plan the work of the Owner, Architect, or other separate contractors, and to evaluate progress for payment purposes or other purposes as described in the Contract Documents.

.9 At the completion of the Work and as a condition precedent to final payment to the Contractor, the Contractor shall submit two (2) copies of the final updated Construction Schedule to the Owner.

§ 3.10.6 The Contractor shall proceed strictly (not substantially) in accordance with the Construction Schedule. The Contractor shall monitor the progress of the Work for conformance with the requirements of the Construction Schedule and shall promptly advise the Owner of any delay or potential delays. If any progress report indicates any delays, the Contractor shall, at no cost to the Owner, propose an affirmative plan to correct the delay, including overtime and/or additional labor, if necessary. In no event shall any progress report constitute an adjustment of the Contract Time or any Milestone Date or the Construct Sum or Guaranteed Maximum Price unless any such adjustment is agreed to by the Owner and authorized pursuant to a Change Order. The Contractor shall perform the Work in general accordance with the most recent schedules submitted to the Owner and Architect and incorporated into the approved Project Schedule.

§ 3.10.7 The Contractor shall cooperate in scheduling and performing its Work to avoid conflict or interference with the Work of others, and shall be responsible for any such conflict or interferences caused. The Contractor acknowledges and understands that the work schedule will be modified from time-to-time to work around the work of other contractors, in an effort to avoid conflicts or interference in the work of the Contractor or other contractors, and that such schedule changes do not give rise to a claim for damages by the Contractor for delay or otherwise. If the schedule for the Work is revised, the Contractor shall conform to the most recent schedule. The Contractor acknowledges that the schedule may change during the duration of the Project and that fact was taken into account by the Contractor when it agreed to the Contract Sum and entered into this Contract under the terms of the conditions set forth herein. As a result, the Contractor shall not be entitled to any additional monies or damages as a result of such schedule changes and the Contractor agrees that the Project Schedule, as modified, shall be an accepted term and contractual requirement. The Contractor shall complete work in accordance with the Project Schedule and Milestone Schedule(s).

§ 3.10.8 The Contractor shall cooperate in working out the proper sequence of operations between the Work of the Contractor and that of other trades on the Project site. The Contractor acknowledges that the schedule for the Work may change during the duration of the Project and the Contractor took that fact into account when it entered into the

AIA Document A201® – 2007. Copyright © 1911, 1915, 1918, 1925, 1937, 1951, 1958, 1961, 1963, 1966, 1970, 1976, 1987, 1997 and 2007 by The American Institute of Architects. All rights reserved. The "American Institute of Architects," "AIA," the AIA Logo, "A201," and "AIA Contract Documents" are registered trademarks and may not be used without permission. This document was produced by AIA software at 09:39:13 ET on 09/22/2020 under Order No.8752807719 which expires on 09/14/2021, is not for resale, is licensed for one-time use only, and may only be used in accordance with the AIA Contract Documents® Terms of Service. To report copyright violations, e-mail copyright@aia.org.
User Notes: (1516648771)

Contract. As a result, the Contractor shall not be entitled to any additional monies or damages as a result of such schedule changes.

§ 3.10.9 Contractor shall prosecute the Work undertaken in a prompt and diligent manner whenever such Work, or any part of it, becomes available, or at such other time or times as the Owner or Architect may direct so as to promote the general progress of the entire construction. The Contractor shall not, by delay or otherwise, interfere with or hinder the Work or the work of any other Contractor. Any materials that are to be furnished by the Contractor shall be furnished in sufficient time to enable the Contractor to perform and complete its Work within the time or times provided in the schedule. If the Contractor shall, through its action or inactions, including the actions or inactions of its' subcontractors or suppliers, fall behind in furnishing necessary labor and/or materials to meet the construction needs in accordance with the established schedule, then it shall increase its forces or work such overtime as may be required, at its own expense, to bring its part of the work up to the proper schedule. In the event that Contractor does not take such action necessary to bring its part of the work up to schedule within twenty-four (24) hours of receiving notice from the Owner or Architect, then, as allowed by, the Owner may supplement Contractor's forces or remove Contractor from the Project and retain others to complete part or all of the remainder of Contractor's Work. Contractor shall be responsible for any and all costs of performing or completing the Work. Contractor shall pay any such sums within ten (10) days of date of invoice. If not paid within ten (10) days, the amount will be withheld from Contractor and paid to the relevant parties from next payment due Contractor.

§ 3.11 DOCUMENTS AND SAMPLES AT THE SITE

The Contractor shall maintain at the site for the Owner one copy of the Drawings, Specifications, Addenda, Change Orders and other Modifications, in good order and marked currently to indicate field changes and selections made during construction, and one copy of approved Shop Drawings, Product Data, Samples and similar required submittals. These documents shall be available to the Architect and shall be delivered to the Architect for submittal to the Owner upon completion of the Work as a record of the Work as ~~constructed.~~ constructed together with a certification that they are "as-built" documents.

§ 3.12 SHOP DRAWINGS, PRODUCT DATA AND SAMPLES

§ 3.12.1 Shop Drawings are drawings, diagrams, schedules and other data specially prepared for the Work by the Contractor or a Subcontractor, Sub-subcontractor, manufacturer, supplier or distributor to illustrate some portion of the Work.

§ 3.12.2 Product Data are illustrations, standard schedules, performance charts, instructions, brochures, diagrams and other information furnished by the Contractor to illustrate materials or equipment for some portion of the Work. All Work shall be furnished and installed in accordance with the Drawings, Specifications and as additionally required by the manufacturer's printed instructions. The Contractor shall review the manufacturer's instructions, and where conflict occurs between the Drawings or Specifications and the manufacturer's instructions, the Contractor shall request clarification from the Architect prior to commencing the Work.

§ 3.12.3 Samples are physical examples that illustrate materials, equipment or workmanship and establish standards by which the Work will be judged.

§ 3.12.4 Shop Drawings, Product Data, Samples and similar submittals are not Contract Documents. Their purpose is to demonstrate the way by which the Contractor proposes to conform to the information given and the design concept expressed in the Contract Documents for those portions of the Work for which the Contract Documents require submittals. Review by the Architect is subject to the limitations of Section 4.2.7. Informational submittals upon which the Architect is not expected to take responsive action may be so identified in the Contract Documents. Submittals that are not required by the Contract Documents may be returned by the Architect without action.

§ 3.12.5 The Contractor shall review for compliance with the Contract Documents, approve and submit to the Architect Shop Drawings, Product Data, Samples and similar submittals required by the Contract Documents in accordance with the ~~submittal schedule approved by the Architect or, in the absence of an approved submittal schedule, with reasonable promptness and in such sequence~~ Construction Schedule as to cause no delay in the Work or in the activities of the Owner or of separate contractors.

AIA Document A201® – 2007. Copyright © 1911, 1915, 1918, 1925, 1937, 1951, 1958, 1961, 1963, 1966, 1970, 1976, 1987, 1997 and 2007 by The American Institute of Architects. All rights reserved. The "American Institute of Architects," "AIA," the AIA Logo, "A201," and "AIA Contract Documents" are registered trademarks and may not be used without permission. This document was produced by AIA software at 09:39:13 ET on 09/22/2020 under Order No.8752807719 which expires on 09/14/2021, is not for resale, is licensed for one-time use only, and may only be used in accordance with the AIA Contract Documents® Terms of Service. To report copyright violations, e-mail copyright@aia.org.
User Notes: (1516648771)

§ 3.12.5.1 The Contractor shall check thoroughly all such submittals, including those it prepares itself, as to measurements, sizes of members, materials and all other details, to assure that they conform to the intent of the Contract Documents.

§ 3.12.5.2 The Contractor shall promptly return to the Subcontractors and/or Suppliers, for correction, any of the submittals that are found inaccurate or otherwise erroneous be corrected.

§ 3.12.5.3 After the Contractor has checked and approved such submittals, the Contractor shall place thereon the date of its approval and the legible signature of the individual who reviewed them and shall then submit them to the Architect for review. The Architect may refuse to check or review any submittals, which are not submitted in compliance with these requirements.

§ 3.12.5.4 Submittals describing manufactured equipment must be "Project Specific." Every submission copy must be clearly marked to fully define the intended model number, configuration and other applicable product information.

§ 3.12.5.5 Among other things, the Contractor shall be responsible for the constructability, content, completeness and consistency of all submittals.

§ 3.12.5.6 The Contractor shall notify the Owner when submittals are received. It shall deliver copies to the Owner upon request.

§ 3.12.5.7 The Contractor shall notify the Owner and the Architect in writing if any submittals appear to modify the requirements of the Contract Documents. This notice shall identify each and every change.

§ 3.12.5.8 The Contractor shall furnish to the Architect for review when requested, or when required by the Contract Documents, samples of all materials and finishes to be used in the execution of the Work. Such samples shall be of sufficient size to be representative and the required number of them shall be submitted before the Work utilizing the materials they exemplify is commenced and in ample time to permit examination thereof. In all cases, samples shall be submitted at least three (3) weeks prior to when approval is needed to maintain the progress required by the Construction Schedule. All materials furnished and finishes applied to the Work shall be fully equal to the submitted samples.

.1 Samples shall be forwarded to the Architect with all shipping charges prepaid. Unless otherwise directed, samples shall be submitted in triplicate, boxed or wrapped properly, each labeled with the name, type or brand of the materials, its place of origin, the names of its producer, Contractor and the Project.

.2 The approval of Samples is generally directed towards establishing quality, color and finish criteria, and does not modify the requirements of the Contract Documents at to dimensions or design.

§ 3.12.6 By submitting Shop Drawings, Product Data, Samples and similar submittals, the Contractor represents to the Owner and Architect that the Contractor has (1) reviewed and approved them, (2) determined and verified materials, field measurements and field construction criteria related thereto, or will do so and (3) checked and coordinated the information contained within such submittals with the requirements of the Work and of the Contract Documents.

§ 3.12.6.1 The Architect will check and review the submittals with reasonable promptness and within any time limits agreed upon in writing and will return them as hereinafter described, indicating by notation, or by written instructions, or other directions, any corrections, which in the judgment of the Architect, may be necessary to meet the requirements of the Contract Documents. The Contractor shall then review such notations, instructions, or directions, and if the Contractor concurs therein, shall make or have made such corrections, and shall, when so noted on the submittals or requested by the Architect, resubmit corrected submittals to the Architect as soon as possible, for final check and review. Such final check and review by the Architect of submittals so corrected and resubmitted will be limited to the corrections only, and the Contractor, by such resubmission shall be held to have represented that such submittals contain no other alterations, additions, or deletions, unless the Contractor, in writing, directs the Architect's specific attention to same. Should the Contractor question or disagree with such notations, instructions, or directions, the Contractor shall direct the Architect's attention to same for further clarification before resubmitting them.

AIA Document A201® – 2007. Copyright © 1911, 1915, 1918, 1925, 1937, 1951, 1958, 1961, 1963, 1966, 1970, 1976, 1987, 1997 and 2007 by The American Institute of Architects. All rights reserved. The "American Institute of Architects," "AIA," the AIA Logo, "A201," and "AIA Contract Documents" are registered trademarks and may not be used without permission. This document was produced by AIA software at 09:39:13 ET on 09/22/2020 under Order No.8752807719 which expires on 09/14/2021, is not for resale, is licensed for one-time use only, and may only be used in accordance with the AIA Contract Documents® Terms of Service. To report copyright violations, e-mail copyright@aia.org.
User Notes: (1516648771)

Corrections or changes indicated on submittals shall not be construed as an order for a change in the Work or to perform extra work.

§ 3.12.6.2 The Architect's review of submittals is not conducted for the purpose of determining the accuracy and completeness of other details such as dimensions and quantities, or for substantiating instructions for installation or performance of equipment of systems, all of which remain the responsibility of the Contractor. The Architect does not assume responsibility for errors, omissions or deviations from the Contract Documents contained in such submittals. Any such errors, omissions or deviations from the Contract Documents must be corrected by the Contractor, irrespective of the receipt and review of the submittals by the Architect, and even through the Work is done in accordance with such submittals, unless such error, omission or deviation from the Contract Documents is specifically called to the Architect's attention by the Contractor in a separate written letter of communication, at the time of submittal, and the Architect has given written approval of such error, omission or deviation.

§ 3.12.7 The Contractor shall perform no portion of the Work for which the Contract Documents require submittal and review of Shop Drawings, Product Data, Samples or similar submittals until the respective submittal has been approved by the Architect.

§ 3.12.8 The Work shall be in accordance with approved submittals except that the Contractor shall not be relieved of responsibility for deviations from requirements of the Contract Documents by the Architect's approval of Shop Drawings, Product Data, Samples or similar submittals unless the Contractor has specifically informed the Architect in writing of such deviation at the time of submittal and (1) the Architect has given written approval to the specific deviation as a minor change in the Work, or (2) a Change Order or Construction Change Directive has been issued authorizing the deviation. The Contractor shall not be relieved of responsibility for errors or omissions in Shop Drawings, Product Data, Samples or similar submittals by the Architect's approval thereof.

§ 3.12.9 The Contractor shall direct specific attention, in writing or on resubmitted Shop Drawings, Product Data, Samples or similar submittals, to revisions other than those requested by the Architect on previous submittals. In the absence of such written notice, the Architect's approval of a resubmission shall not apply to such revisions.

§ 3.12.10 The Contractor shall not be required to provide professional services that constitute the practice of architecture or engineering unless such services are specifically required by the Contract Documents for a portion of the Work or unless the Contractor needs to provide such services in order to carry out the Contractor's responsibilities for construction means, methods, techniques, sequences and procedures. The Contractor shall not be required to provide professional services in violation of applicable law. If professional design services or certifications by a design professional related to systems, materials or equipment are specifically required of the Contractor by the Contract Documents, the Owner and the Architect will specify all performance and design criteria that such services must satisfy. The Contractor shall cause such services or certifications to be provided by a properly licensed design professional, whose signature and seal shall appear on all drawings, calculations, specifications, certifications, Shop Drawings and other submittals prepared by such professional. Shop Drawings and other submittals related to the Work designed or certified by such professional, if prepared by others, shall bear such professional's written approval when submitted to the Architect. The Owner and the Architect shall be entitled to rely upon the adequacy, accuracy and completeness of the services, certifications and approvals performed or provided by such design professionals, provided the Owner and Architect have specified to the Contractor all performance and design criteria that such services must satisfy. Pursuant to this Section 3.12.10, the Architect will review, approve or take other appropriate action on submittals only for the limited purpose of checking for conformance with information given and the design concept expressed in the Contract Documents. The Contractor shall not be responsible for the adequacy of the performance and design criteria specified in the Contract Documents.

§ 3.13 USE OF SITE

~~The Contractor shall confine operations at the site to areas permitted by applicable laws, statutes, ordinances, codes, rules and regulations, and lawful orders of public authorities and the Contract Documents and shall not unreasonably encumber the site with materials or equipment.~~**§ 3.13.1** The Contractor shall confine operations at the site to areas permitted by Applicable Laws, and the Contract Documents and shall not unreasonably encumber the Project site with materials or equipment. Only materials and equipment which are to be used for the Project or carry out the Work shall be stored at the Project site. Protection of such materials and equipment shall be the sole responsibility of the Contractor. No off-site storage is permitted without the Owner's prior written consent.

AIA Document A201® – 2007. Copyright © 1911, 1915, 1918, 1925, 1937, 1951, 1958, 1961, 1963, 1966, 1970, 1976, 1987, 1997 and 2007 by The American Institute of Architects. All rights reserved. The "American Institute of Architects," "AIA," the AIA Logo, "A201," and "AIA Contract Documents" are registered trademarks and may not be used without permission. This document was produced by AIA software at 09:39:13 ET on 09/22/2020 under Order No.8752807719 which expires on 09/14/2021, is not for resale, is licensed for one-time use only, and may only be used in accordance with the AIA Contract Documents® Terms of Service. To report copyright violations, e-mail copyright@aia.org.
User Notes: (1516648771)

§ 3.13.2 No member of the Construction Team shall erect any sign on the Project Site without the Owner's prior written consent.

§ 3.13.3 The Contractor shall ensure that the Work is at all times performed in a manner that affords the Owner, the Architect, and the Owner's separate contractors reasonable access, both vehicular and pedestrian, to the Project Site and all adjacent areas. The Work shall be performed, to the fullest extent reasonably possible, in such a manner that public areas adjacent to the Project site shall be free from all debris, building materials and equipment. Without limiting any other provision of the Contract Documents, the Contractor shall use its best efforts to minimize any interference with the occupancy or beneficial use of (1) any areas and buildings adjacent to the Project site or (2) portions of the Project in which Work is not being carried out in the event of partial occupancy.

§ 3.13.4 The Contractor shall not, without the Owner's prior written approval, permit any workers to use any existing facilities at the Project site, including, without limitation, lavatories, toilets, entrances, and eating and parking areas, other than those designated by the Owner. Without limiting any other provision of the Contract, the Contractor shall enforce compliance with all policies, procedures, rules and regulations promulgated by the Owner in connection with the use and occupancy of the Project site and the surrounding area. Existing Construction Team to comply with all insurance requirements and collective bargaining agreements applicable to use and occupancy of the Project site and the surrounding area. However, the Contractor shall not be responsible to regulate the workers' conduct outside of work hours except as may be permitted under applicable laws and collective bargaining agreements.

.1 Should any room or part of an existing building or facility be temporarily used by any member of the Construction Team as a shop, storeroom, locker room, an office, or for any other purpose, such room or part shall, prior to completion and when so directed, be thoroughly cleaned and returned to its original condition. All damage to any such room or part of an existing building or facility arising therefrom shall be corrected, and the whole left in a condition acceptable to the Owner by the Contractor. No room or part of an existing structure shall be so used without the prior written consent of the Owner.

§ 3.13.5 Anything contained in the Contract Documents to the contrary notwithstanding, no one except the Owner shall be permitted to disrupt the operation of any building system, utilities, or any other services without the Owner's prior written consent. Any request to perform such work shall be in writing, received by the Owner no less than five (5) days prior to the commencement of the requested disruption, and shall detail (1) the exact nature and duration of such interruption, (2) the area affected, and (3) any impact upon the Construction Schedule caused by such proposed temporary disruption. Except in the case of extraordinary measures, all Work shall be performed during the hours and on the days set forth in the Specifications. The Contractor's failure to comply with the notice provisions of this section shall constitute a waiver by the Contractor of any right it may have to an adjustment of its Contract Sum, or the Contract Time, on account of any postponement, rescheduling, or other delays ordered by the Owner in connection with any Work affecting a critical service for which appropriate notice was furnished.

§ 3.13.6 The Contractor will consult with the Owner concerning any necessary operations at the Project site, including staging area limits, office or storage trailer locations, dumpster operations, equipment and material deliveries, hoisting areas and any other construction impacts on the Owner's grounds.

§ 3.13.7 The Contractor shall provide suitable toilet facilities, at locations approved by the Owner, for the use of all its employees and those of the Construction Team and shall maintain same in proper sanitary condition acceptable to the Owner. All temporary toilet facilities shall be removed upon completion of the Work. The Contractor or any of its employees, agents or Subcontractors shall not use any toilet facilities of Owner's buildings without the Owner's prior written consent.

§ 3.14 CUTTING AND PATCHING

§ 3.14.1 The Contractor shall be responsible for cutting, fitting or patching required to complete the Work or to make its parts fit together properly. All areas requiring cutting, fitting and patching shall be restored to the condition existing prior to the cutting, fitting and patching, unless otherwise required by the Contract Documents. Only skilled tradespersons shall perform any cutting, fitting or patching work.

§ 3.14.2 The Contractor shall not damage or endanger a portion of the Work or fully or partially completed construction of the Owner or separate contractors by cutting, patching or otherwise altering such construction, or by

AIA Document A201® – 2007. Copyright © 1911, 1915, 1918, 1925, 1937, 1951, 1958, 1961, 1963, 1966, 1970, 1976, 1987, 1997 and 2007 by The American Institute of Architects. All rights reserved. The "American Institute of Architects," "AIA," the AIA Logo, "A201," and "AIA Contract Documents" are registered trademarks and may not be used without permission. This document was produced by AIA software at 09:39:13 ET on 09/22/2020 under Order No.8752807719 which expires on 09/14/2021, is not for resale, is licensed for one-time use only, and may only be used in accordance with the AIA Contract Documents® Terms of Service. To report copyright violations, e-mail copyright@aia.org.
User Notes: (1516648771)

excavation. The Contractor shall not cut or otherwise alter such construction by the Owner or a separate contractor except with written consent of the Owner and of such separate contractor; such consent shall not be unreasonably withheld. The Contractor shall not unreasonably withhold from the Owner or a separate contractor the Contractor's consent to cutting or otherwise altering the Work.

§ 3.15 CLEANING UP

§ 3.15.1 The ~~Contractor shall keep the premises~~ Contractor, its employees, Subcontractors, Sub-subcontractors at any tier, and their respective agents and employees, and other persons performing portions of the Work for, or on behalf of, the Contractor or any of its Subcontractors or Sub-subcontractors at any tier shall keep the Project site and surrounding area free from accumulation of waste materials or rubbish caused by operations under the Contract. At completion of the Work, the Contractor shall remove waste materials, rubbish, the Contractor's tools, construction equipment, machinery and surplus materials from and about the Project.

§ 3.15.2 If the Contractor fails to ~~clean up as provided in the Contract Documents,~~ keep the Project site clean as required by the Owner or as provided in the Contract Documents or fails to clean up the Project site upon completion, the Owner may do so and Owner shall be entitled to reimbursement for all costs and expenses for clean-up from the Contractor.

§ 3.16 ACCESS TO WORK

The Contractor shall provide the Owner and Architect access to the Work in preparation and progress wherever located.

§ 3.17 ROYALTIES, PATENTS AND COPYRIGHTS

The Contractor shall pay all royalties and license fees. The Contractor shall defend suits or claims for infringement of copyrights and patent rights and shall indemnify and hold harmless the Owner and Architect harmless from any and all costs, damages and losses, including, but not limited to, actual attorneys' fees, loss on account thereof, but shall not be responsible for such defense or loss when a particular design, process or product of a particular manufacturer or manufacturers is required by the Contract Documents, or where the copyright violations are contained in Drawings, Specifications or other documents prepared by the Owner or Architect. However, if the Contractor has reason to believe that the required design, process or product is an infringement of a copyright or a patent, the Contractor shall be responsible for such loss unless such information is promptly furnished to the Architect.

§ 3.18 INDEMNIFICATION

§ 3.18.1 ~~To the fullest extent permitted by law the Contractor shall indemnify and hold harmless the Owner, Architect, Architect's consultants, and agents and employees of any of them from and against claims, damages, losses and expenses, including but not limited to attorneys' fees, arising out of or resulting from performance of the Work, provided that such claim, damage, loss or expense is attributable to bodily injury, sickness, disease or death, or to injury to or destruction of tangible property (other than the Work itself), but only to the extent caused by the negligent acts or omissions of the Contractor, a Subcontractor, anyone directly or indirectly employed by them or anyone for whose acts they may be liable, regardless of whether or not such claim, damage, loss or expense is caused in part by a party indemnified hereunder. Such obligation shall not be construed to negate, abridge, or reduce other rights or obligations of indemnity that would otherwise exist as to a party or person described in this Section 3.18.~~Contractor shall indemnify, defend and hold harmless the Owner, its Board and its Board Members in their official and individual capacities, its administrators, employees and agents, from and against all claims, counter-claims, suits, debts, demands, actions, judgments, liens, injuries, liabilities, costs, expenses, damages, and actual attorney fees and actual expert witness fees arising out of or in connection with Contractor's performance of the Work pursuant to the Contract Documents and/or from Contractor's violation of any of the terms of the Contract, including, but not limited to: (1) the negligent acts or willful misconduct of the Contractor, its officers, directors, employees, agents and Subcontractors; (2) any breach of the terms of the Contract by the Contractor, its officers, directors, employees, agents and Subcontractors; (3) any violation of applicable state and/or federal law, rule, ordinance, policy or regulations and/or licensing and permitting requirement applicable to providing the Work by its officers, directors, employees, agents and Subcontractors; or (4) any breach of any representation or warranty by the Contractor under the Contract by its officers, directors, employees, agents and Subcontractors. The Contractor shall notify the Owner by certified mail, return receipt requested, immediately upon knowledge of any claim, suit, action, or proceeding for which it may be entitled to indemnification under the Contract. This paragraph shall survive the expiration or earlier termination of the Contract and shall not be limited by the Contractor's insurance obligations contained in this Contract. In addition to and not in limitation of the Contractor's other indemnity obligations, the Contractor hereby accepts and assumes

AIA Document A201® – 2007. Copyright © 1911, 1915, 1918, 1925, 1937, 1951, 1958, 1961, 1963, 1966, 1970, 1976, 1987, 1997 and 2007 by The American Institute of Architects. All rights reserved. The "American Institute of Architects," "AIA," the AIA Logo, "A201," and "AIA Contract Documents" are registered trademarks and may not be used without permission. This document was produced by AIA software at 09:39:13 ET on 09/22/2020 under Order No.8752807719 which expires on 09/14/2021, is not for resale, is licensed for one-time use only, and may only be used in accordance with the AIA Contract Documents® Terms of Service. To report copyright violations, e-mail copyright@aia.org.
User Notes: (1516648771)

exclusive liability for and shall indemnify, protect and save harmless the Owner and Architect from and against the payment of the following:

All contributions, taxes or premiums (including interest and penalties thereon) which may be payable under the unemployment insurance law of any state, the federal Social Security Act, federal, state, county and/or municipal tax withholding laws, or any other law, measured upon the payroll of or required to be withheld from employees by whomsoever employed, engaged in the Work to be performed and furnished under the Contract;

All sales, use, personal property and other taxes (including interest and penalties thereon) required by any federal, state, county, municipal or other law to be paid or collected by the Contractor or any of its Subcontractors or vendors or any other person or persons acting for, through or under it or any of them, by reason of the performance of the Work or the acquisition, ownership, furnishing, or use of any materials, equipment, supplies, labor, services or other items for or in connection with the Work; and

All pension, welfare, vacation, annuity and other benefit contributions payable under or in connection with respect to all persons by whomsoever employed, engaged in the Work to be performed and furnished under the Contract.

The Contractor shall indemnify, defend and hold the Owner harmless from any claim, damage, loss or expense, including but not limited to actual attorney fees, incurred by the Owner related to any hazardous material or waste, toxic substance, pollution or contamination brought into the Project site or caused by the Contractor or used, handled, transported, stored, removed, remediated, disturbed or dispersed of by Contractor.

§ 3.18.2 In claims against any person or entity indemnified under this Section 3.18 by an employee of the Contractor, a Subcontractor, anyone directly or indirectly employed by them or anyone for whose acts they may be liable, the indemnification obligation under Section 3.18.1 shall not be limited by a limitation on amount or type of damages, compensation or benefits payable by or for the Contractor or a Subcontractor under workers' compensation acts, disability benefit acts or other employee benefit acts.

§ 3.19 RECORD DOCUMENTS

§ 3.19.1 The Contractor shall maintain at the Project site on a current basis for review by the Owner, the Architect, and all members of the Construction Team, the Record Documents, which include: a record copy of all logs, reports, Contract Documents, and Record Drawings, in good order and marked to record all changes made during construction; all approved Shop Drawings, Product Data, Samples, and other submittals; applicable handbooks; maintenance and operating manuals and instructions; and other related documents and revisions which arise out of the Contract Documents or the Work. As part of the Record Documents, the Contractor shall maintain records of principal building layout lines, elevations of the bottoms of footings, project floor levels and key site elevations certified by a qualified surveyor. The Contractor shall at all times make all records (excluding internal memoranda or reports, privileged communications and documents with incidental references to the Work, or documents which discuss multiple projects) available to the Owner and the Architect, and, at the completion of the Work, shall deliver all such Record Documents to the Owner neatly organized, bound and indexed. The Contractor shall monitor preparation of as-built Drawings by Subcontractors on a monthly basis and shall take corrective action as appropriate when as-builts are not being properly updated. The Contractor shall be permitted to retain a copy of the Record Documents for its own use after the Work is completed and, in any event, the Owner shall continue to provide access to the Record Documents, for the Contractor to inspect and copy.

§ 3.19.2 The Record Drawings shall be prepared and updated during the prosecution of the Work. The prints for Record Drawing use will be a set of blackline prints provided by the Architect to the Contractor at the start of construction. The Contractor shall maintain said set in good condition and shall use colored pencils or other methods reasonably acceptable to the Owner to mark up said set with "record information" in a legible manner to show: (1) deviations from the Drawings made during construction; (2) details in the Work not previously shows; (3) changes to existing conditions or existing conditions found to differ from those shown on any existing drawings; (4) the actual installed position of equipment, piping, conduits, light switches, electric fixtures, circuiting, ducts, dampers, access panels, control valves, drains, openings and stub-outs; and (5) such other information as the Owner may reasonably request.

§ 3.19.3 The Contractor shall keep note of all the deviations and discrepancies in the underground, concealed conditions and other items of construction and the Work on field Drawings. At the completion of the Project the

AIA Document A201® – 2007. Copyright © 1911, 1915, 1918, 1925, 1937, 1951, 1958, 1961, 1963, 1966, 1970, 1976, 1987, 1997 and 2007 by The American Institute of Architects. All rights reserved. The "American Institute of Architects," "AIA," the AIA Logo, "A201," and "AIA Contract Documents" are registered trademarks and may not be used without permission. This document was produced by AIA software at 09:39:13 ET on 09/22/2020 under Order No.8752807719 which expires on 09/14/2021, is not for resale, is licensed for one-time use only, and may only be used in accordance with the AIA Contract Documents® Terms of Service. To report copyright violations, e-mail copyright@aia.org.
User Notes: (1516648771)

Contractor's notes on the record field Drawings shall be neatly transcribed onto a clean set of Drawings furnished by the Architect. The Contractor shall submit the final Record Drawings to the Architect for review.

§ 3.19.4 During construction, the Contractor shall maintain on the Project site, a separate, clean set of Drawings for the sole purpose of recording changes and actual 'as installed' information. This set shall be accessible for inspection by the Owner and the Architect at all times. The Contractor shall bring this set of Drawings to the scheduled construction progress meetings. The Contractor shall record all information as the Work progresses, clearly and neatly, in color and maintain it on a current basis as directed by the Owner and submit these Drawings to the Owner within thirty (30) days after Substantial Completion. As a general guide, the type of information to be recorded includes, but is not limited to: (1) revisions made except minor or non-critical dimensional changes, (2) omissions, including Work omitted by Change Order or accepted alternates, (3) exact dimensioned locations of concealed lines, (4) locations of all control devices, (5) any additions to Work, (6) changes in significant details, (7) and any other information of a similar nature.

§ 3.19.5 Upon substantial completion of the Project, the Contractor shall submit to the Owner the Contractor's mechanical and electrical coordination Record Drawings prepared during construction by the Contractor. Examples of such drawings include sheet metal ductwork drawings, piping drawings, fire protection piping drawings, electrical raceway drawings, and the like. When the Contractor produces drawings by computer aided drafting, the Contractor shall also submit their coordination drawings on electronic data files compatible with AutoCAD computer software. All such documents shall contain the Owner's Project Number for identification purposes.

§ 3.20 WARRANTIES AND MANUALS

§ 3.20 Unless the Contract Documents require otherwise, the Contractor shall bind and turn over to the Owner two (2) sets of manufacturers' warranties and operating and/or maintenance manuals, instructions, or schedules for all equipment and special materials requiring such. Such binders will clearly categorize and index each piece of equipment and material included, and shall be clearly marked noting "Project Specific" equipment, model numbers, and other applicable information. Such manuals will be collected and organized by the Contractor and submitted to the Owner at one time, prior to the issuance of the certificate of substantial completion.

ARTICLE 4 ARCHITECT

§ 4.1 GENERAL

§ 4.1.1 The Owner shall retain an architect lawfully licensed to practice architecture or an entity lawfully practicing architecture in the jurisdiction where the Project is located. That person or entity is identified as the Architect in the ~~Agreement~~ Contract and is referred to throughout the Contract Documents as if singular in number.

§ 4.1.2 Duties, responsibilities and limitations of authority of the Architect as set forth in the Contract Documents shall not be restricted, modified or extended without written consent of the Owner, Contractor and Architect. Consent shall not be unreasonably withheld.

§ 4.1.3 If the employment of the Architect is terminated, the Owner shall employ a successor architect as to whom the Contractor has no reasonable objection and whose status under the Contract Documents shall be that of the Architect.

§ 4.2 ADMINISTRATION OF THE CONTRACT

§ 4.2.1 The Architect will provide administration of the Contract as described in the Contract Documents and will be an Owner's representative during construction until the date the Architect issues the final Certificate ~~for~~ For Payment. The Architect will have authority to act on behalf of the Owner only to the extent provided in the Contract Documents.

§ 4.2.2 The Architect will visit the site at intervals appropriate to the stage of construction, or as otherwise agreed with the Owner, to become generally familiar with the progress and quality of the portion of the Work completed, and to determine in general if the Work observed is being performed in a manner indicating that the Work, when fully completed, will be in accordance with the Contract Documents. However, the Architect will not be required to make exhaustive or continuous on-site inspections to check the quality or quantity of the Work. The Architect will not have control over, charge of, or responsibility for, the construction means, methods, techniques, sequences or procedures, or for the safety precautions and programs in connection with the Work, since these are solely the Contractor's rights and responsibilities under the Contract Documents, except as provided in Section 3.3.1.

AIA Document A201® – 2007. Copyright © 1911, 1915, 1918, 1925, 1937, 1951, 1958, 1961, 1963, 1966, 1970, 1976, 1987, 1997 and 2007 by The American Institute of Architects. All rights reserved. The "American Institute of Architects," "AIA," the AIA Logo, "A201," and "AIA Contract Documents" are registered trademarks and may not be used without permission. This document was produced by AIA software at 09:39:13 ET on 09/22/2020 under Order No.8752807719 which expires on 09/14/2021, is not for resale, is licensed for one-time use only, and may only be used in accordance with the AIA Contract Documents® Terms of Service. To report copyright violations, e-mail copyright@aia.org.
User Notes: (1516648771)

§ 4.2.3 On the basis of the site visits, the Architect will keep the Owner reasonably informed about the progress and quality of the portion of the Work completed, and report to the Owner (1) known deviations from the Contract Documents and from the most recent construction schedule submitted by the Contractor, and (2) defects and deficiencies observed in the Work. The Architect will not be responsible for the Contractor's failure to perform the Work in accordance with the requirements of the Contract Documents. The Architect will not have control over or charge of and will not be responsible for acts or omissions of the Contractor, Subcontractors, or their agents or employees, or any other persons or entities performing portions of the Work.

§ 4.2.4 COMMUNICATIONS FACILITATING CONTRACT ADMINISTRATION
Except as otherwise provided in the Contract Documents or when direct communications have been specially authorized, the Owner and Contractor shall endeavor to communicate with each other through the Architect about matters arising out of or relating to the Contract. Communications by and with the Architect's consultants shall be through the Architect. Communications by and with Subcontractors and material suppliers shall be through the Contractor. Communications by and with separate contractors shall be through the Owner.

§ 4.2.5 Based on the Architect's evaluations of the Contractor's Applications for Payment, the Architect will review and certify the amounts due the Contractor and will issue Certificates for Payment in such amounts.

§ 4.2.6 The Architect has authority to reject Work that does not conform to the Contract Documents. Whenever the Architect considers it necessary or advisable, the Architect will have authority to require inspection or testing of the Work in accordance with Sections 13.5.2 and 13.5.3, whether or not such Work is fabricated, installed or completed. However, neither this authority of the Architect nor a decision made in good faith either to exercise or not to exercise such authority shall give rise to a duty or responsibility of the Architect to the Contractor, Subcontractors, material and equipment suppliers, their agents or employees, or other persons or entities performing portions of the Work.

§ 4.2.7 The Architect will review and approve, or take other appropriate action upon, the Contractor's submittals such as Shop Drawings, Product Data and Samples, but only for the limited purpose of checking for conformance with information given and the design concept expressed in the Contract Documents. The Architect's action will be taken in accordance with the submittal schedule approved by the Architect or, in the absence of an approved submittal schedule, with reasonable promptness while allowing sufficient time in the Architect's professional judgment to permit adequate review. Review of such submittals is not conducted for the purpose of determining the accuracy and completeness of other details such as dimensions and quantities, or for substantiating instructions for installation or performance of equipment or systems, all of which remain the responsibility of the Contractor as required by the Contract Documents. The Architect's review of the Contractor's submittals shall not relieve the Contractor of the obligations under Sections 3.3, 3.5 and 3.12. The Architect's review shall not constitute approval of safety precautions or, unless otherwise specifically stated by the Architect, of any construction means, methods, techniques, sequences or procedures. The Architect's approval of a specific item shall not indicate approval of an assembly of which the item is a component.

§ 4.2.8 The Architect will prepare Change Orders and Construction Change Directives, and may authorize minor changes in the Work as provided in Section 7.4. The Architect will investigate and make determinations and recommendations regarding concealed and unknown conditions as provided in Section 3.7.4.

§ 4.2.9 The Architect will conduct inspections to determine the date or dates of Substantial Completion and the date of final completion; issue Certificates of Substantial Completion pursuant to Section 9.8; receive and forward to the Owner, for the Owner's review and records, written warranties and related documents required by the Contract and assembled by the Contractor pursuant to Section 9.10; and issue a final Certificate for Payment pursuant to Section 9.10.

§ 4.2.10 If the Owner and Architect agree, the Architect will provide one or more project representatives to assist in carrying out the Architect's responsibilities at the site. The duties, responsibilities and limitations of authority of such project representatives shall be as set forth in an exhibit to be incorporated in the Contract Documents.

§ 4.2.11 The Architect will interpret and decide matters concerning performance under, and requirements of, the Contract Documents on written request of either the Owner or Contractor. The Architect's response to such requests will be made in writing within any time limits agreed upon or otherwise with reasonable promptness. The Contractor

AIA Document A201® – 2007. Copyright © 1911, 1915, 1918, 1925, 1937, 1951, 1958, 1961, 1963, 1966, 1970, 1976, 1987, 1997 and 2007 by The American Institute of Architects. All rights reserved. The "American Institute of Architects," "AIA," the AIA Logo, "A201," and "AIA Contract Documents" are registered trademarks and may not be used without permission. This document was produced by AIA software at 09:39:13 ET on 09/22/2020 under Order No.8752807719 which expires on 09/14/2021, is not for resale, is licensed for one-time use only, and may only be used in accordance with the AIA Contract Documents® Terms of Service. To report copyright violations, e-mail copyright@aia.org.
User Notes: (1516648771)

shall reimburse Owner for all costs and expenses for the Architect's time to interpret and decide matters it deems clear and unambiguous.

§ 4.2.12 Interpretations and decisions of the Architect will be consistent with the intent of, and reasonably inferable from, the Contract Documents and will be in writing or in the form of drawings. When making such interpretations and decisions, the Architect will endeavor to secure faithful performance by both Owner and Contractor, will not show partiality to either and will not be liable for results of interpretations or decisions rendered in good faith. The Contractor shall, and shall cause all Subcontractors to comply with an interpretation and decisions of the Architect.

§ 4.2.13 The Architect's decisions on matters relating to aesthetic effect will be final if consistent with the intent expressed in the Contract Documents.

§ 4.2.14 The Architect will review and respond to requests for information about the Contract Documents. The Architect's response to such requests will be made in writing within any time limits agreed upon or otherwise with reasonable promptness. If appropriate, the Architect will prepare and issue supplemental Drawings and Specifications in response to the requests for information.

ARTICLE 5 SUBCONTRACTORS

§ 5.1 DEFINITIONS

§ 5.1.1 A Subcontractor is a person or entity who has a direct contract with the Contractor to perform a portion of the Work at the site. The term "Subcontractor" is referred to throughout the Contract Documents as if singular in number and means a Subcontractor or an authorized representative of the Subcontractor. The term "Subcontractor" does not include a separate contractor or subcontractors of a separate contractor.

§ 5.1.2 A Sub-subcontractor is a person or entity who has a direct or indirect contract with a Subcontractor to perform a portion of the Work at the site. The term "Sub-subcontractor" is referred to throughout the Contract Documents as if singular in number and means a Sub-subcontractor or an authorized representative of the Sub-subcontractor.

§ 5.2 AWARD OF SUBCONTRACTS AND OTHER CONTRACTS FOR PORTIONS OF THE WORK

§ 5.2.1 Unless otherwise stated in the Contract Documents or the bidding requirements, the Contractor, as soon as practicable after award of the Contract, shall furnish in writing to the Owner through the Architect the names of persons or entities (including those who are to furnish materials or equipment fabricated to a special design) proposed for each principal portion of the Work. The Architect may reply within 14 days to the Contractor in writing stating (1) whether the Owner or the Architect has reasonable objection to any such proposed person or entity or (2) that the Architect requires additional time for review. ~~Failure of the Owner or Architect to reply within the 14-day period shall constitute notice of no reasonable objection.~~

§ 5.2.2 The Contractor shall not contract with a proposed person or entity to whom the Owner or Architect has made reasonable and timely objection. The Contractor shall not be required to contract with anyone to whom the Contractor has made reasonable objection.

§ 5.2.3 If the Owner or Architect has reasonable objection to a person or entity proposed by the Contractor, the Contractor shall propose another to whom the Owner or Architect has no reasonable objection. If the proposed but rejected Subcontractor was reasonably capable of performing the Work, the Contract Sum and Contract Time shall be increased or decreased by the difference, if any, occasioned by such change, and an appropriate Change Order shall be issued before commencement of the substitute Subcontractor's Work. However, no increase in the Contract Sum or Contract Time shall be allowed for such change unless the Contractor has acted promptly and responsively in submitting names as required.

§ 5.2.4 The Contractor shall not substitute a Subcontractor, person or entity previously selected if the Owner or Architect makes reasonable objection to such substitution.

§ 5.3 SUBCONTRACTUAL RELATIONS

~~By appropriate agreement, written where legally required for validity, the Contractor shall require each Subcontractor, to the extent of the Work to be performed by the Subcontractor, to be bound to the Contractor by terms of the Contract Documents, and to assume toward the Contractor all the obligations and responsibilities, including the responsibility for safety of the Subcontractor's Work, which the Contractor, by these Documents, assumes toward the Owner and~~

AIA Document A201® – 2007. Copyright © 1911, 1915, 1918, 1925, 1937, 1951, 1958, 1961, 1963, 1966, 1970, 1976, 1987, 1997 and 2007 by The American Institute of Architects. All rights reserved. The "American Institute of Architects," "AIA," the AIA Logo, "A201," and "AIA Contract Documents" are registered trademarks and may not be used without permission. This document was produced by AIA software at 09:39:13 ET on 09/22/2020 under Order No.8752807719 which expires on 09/14/2021, is not for resale, is licensed for one-time use only, and may only be used in accordance with the AIA Contract Documents® Terms of Service. To report copyright violations, e-mail copyright@aia.org.
User Notes: (1516648771)

~~Architect. Each subcontract agreement shall preserve and protect the rights of the Owner and Architect under the Contract Documents with respect to the Work to be performed by the Subcontractor so that subcontracting thereof will not prejudice such rights, and shall allow to the Subcontractor, unless specifically provided otherwise in the subcontract agreement, the benefit of all rights, remedies and redress against the Contractor that the Contractor, by the Contract Documents, has against the Owner. Where appropriate, the Contractor shall require each Subcontractor to enter into similar agreements with Sub-subcontractors. The Contractor shall make available to each proposed Subcontractor, prior to the execution of the subcontract agreement, copies of the Contract Documents to which the Subcontractor will be bound, and, upon written request of the Subcontractor, identify to the Subcontractor terms and conditions of the proposed subcontract agreement that may be at variance with the Contract Documents. Subcontractors will similarly make copies of applicable portions of such documents available to their respective proposed Sub-subcontractors.~~**§ 5.3.1** By appropriate agreement, written where legally required for validity, the Contractor shall require each Subcontractor, to the extent of the Work to be performed by the Subcontractor, to be bound to the Contractor by terms of the Contract Documents, and to assume toward the Contractor all the obligations and responsibilities, including the responsibility for safety of the Subcontractor's Work, which the Contractor, by these Documents, assumes toward the Owner and Architect. Each subcontract agreement shall preserve and protect the rights of the Owner and Architect under the Contract Documents with respect to the Work to be performed by the Subcontractor so that subcontracting thereof will not prejudice such rights. Where appropriate, the Contractor shall require each Subcontractor to enter into similar agreements with Sub-subcontractors. The Contractor shall make available to each proposed Subcontractor, prior to the execution of the subcontract agreement, copies of the Contract Documents to which the Subcontractor will be bound, and, upon written request of the Subcontractor, identify to the Subcontractor terms and conditions of the proposed subcontract agreement that may be at variance with the Contract Documents. Subcontractors will similarly make copies of applicable portions of such documents available to their respective proposed Sub-subcontractors.

§ 5.3.1.1 Work performed for the Contractor by a Subcontractor shall be performed pursuant to a written subcontract, which shall (in addition to the requirements of Sections 5.3 and 5.4) contain provisions that:

(1) Requires that such portion of the Work be performed in accordance with the requirements of the Contract Documents;

(2) Requires timely submission of Subcontractor's applications for payment and ancillary materials in order to enable the Contractor to apply for payment in accordance with the provisions of Article 9;

(3) Waives all rights to contracting parties may have against one another or that the Subcontractor may have against the Owner for damages caused by fire or other perils covered by the property insurance described in Article 11;

(4) Recognizes the rights of the Owner pursuant to the Contingent Assignment of Subcontracts contained in these General Conditions and require the Subcontractor (upon notice by the Owner that the Owner has terminated the Contract with the Contractor pursuant to the terms of Article 14, and that the Owner has elected to retain the Subcontractor pursuant to the terms of its Subcontract with the Contractor) to complete the unperformed obligations under such Subcontract and, if requested by the Owner, to enter into an appropriate agreement evidencing the fact that the Subcontractor is bound to the Owner under its Subcontract in the manner in which it had been bound to the Contractor;

(5) Requires the Subcontractor performing labor at the Project site to carry and maintain the insurance described in Article 11, unless otherwise approved by the Owner, and to deliver certificates of insurance to the Contractor prior to commencement of its portion of the Work;

(6) Includes the following sentence: "Owner is an intended third-party beneficiary of this Subcontract.";

(7) Requires each Subcontractor to make all claims for changes or extensions of time to the Contractor strictly (not substantially) in the manner provided in the Contract;

(8) Limits claims and damages in the manner provided in the Contract; and

AIA Document A201® – 2007. Copyright © 1911, 1915, 1918, 1925, 1937, 1951, 1958, 1961, 1963, 1966, 1970, 1976, 1987, 1997 and 2007 by The American Institute of Architects. All rights reserved. The "American Institute of Architects," "AIA," the AIA Logo, "A201," and "AIA Contract Documents" are registered trademarks and may not be used without permission. This document was produced by AIA software at 09:39:13 ET on 09/22/2020 under Order No.8752807719 which expires on 09/14/2021, is not for resale, is licensed for one-time use only, and may only be used in accordance with the AIA Contract Documents® Terms of Service. To report copyright violations, e-mail copyright@aia.org.
User Notes: (1516648771)

(9) Are in no way inconsistent with any provision of the Contract;

(10) Requires the Subcontractor to indemnify the Owner the same extent required under Section 3.18.

Sub-subcontracts and supply contracts shall be subject to identical conditions, except: (1) suppliers that are not performing any Work on the Project site are not subject to the insurance requirements described in Article 11; and (2) Subcontractors and Sub-subcontractors may satisfy the insurance requirements described in Article 11 by being named as an additional insured under the Contractor's insurance policies or, in the case of a Sub-subcontractor, by being named as an additional insured under a Subcontractor's insurance policies.

§ 5.3.1.2 Upon request, the Contractor shall deliver a copy of any Subcontract, Sub-subcontract or Supply Contract to the Owner.

§ 5.3.2 COORDINATION OF SUBCONTRACTORS

§ 5.3.2.1 The Contractor shall provide supervisory, administrative, management, inspection and related services as required to properly coordinate, schedule and sequence the Work of the Subcontractors with each other (to avoid both supplication and omission of Work) and with the activities and responsibilities of the Contractor, the Owner and the Architect to complete the Work in accordance with the requirements of the Contract Documents with respect to cost, time and quality and to ensure that the other goals of the Work are otherwise met or exceeded.

§ 5.3.2.2 The Contractor shall schedule and conduct with the Subcontractors and Sub-subcontractors construction progress and any other meetings deemed necessary to discuss such matters as procedures, progress, problems, safety, inspections, sequencing, and scheduling, and shall prepare and promptly distribute minutes. Construction progress meetings will be conducted by the Contractor weekly unless otherwise directed by the Owner and attended by all Subcontractors and Sub-subcontractors whose Work has not been completed. Executive level progress meetings will be held on a monthly basis. All progress meetings minutes shall be provided to the Owner by the Contractor within five (5) days after the meeting and distributed to all attendees promptly after they have been approved by the Owner. The Owner will act promptly in providing its approval.

§ 5.3.2.3 Schedule of Subcontractors' Work. The Contractor shall require each Subcontractor to agree to be contractually bound to the requirements of the Construction Schedule. The Contractor shall require each Subcontractor to agree to cooperate with the Contractor in developing a detailed schedule applicable to its portion of the Work within fourteen (14) days after award of contract unless otherwise specified. The Contractor shall assist in the development of all Subcontractor schedules and shall prepare such schedules if any Subcontractor fails to do so. The Contractor shall require all Subcontractors to meet as often as necessary with the Contractor to complete their detailed schedules. However, the Construction Schedule will take precedence over any schedules prepared by Subcontractors with respect to time of completion for each bid package. If any such schedule indicates that additional time or effort will be required to maintain these schedules, the Contractor, Subcontractor shall agree to work additional time, including weekends if necessary, or to add manpower, all at no extra cost to the Owner. The Contractor will require all their subcontractors to include the requirements in Sections 5.3.2.3 and 5.3.2.4 in their sub-subcontractor contracts.

§ 5.3.2.4 Subcontractors' Performance. The Contractor shall ensure satisfactory and timely (with reference to both Milestone and Substantial Completion Dates) performance from each of the Subcontractors. The Contractor shall take appropriate measures when any Subcontractor is not performing its obligations satisfactorily.

§ 5.3.2.5 Payments to Subcontractors. Upon award of the Subcontract, the Contractor shall have each Subcontractor prepare and submit a schedule of values allocating that portion of the Cost of the Work attributable to its Subcontract to the various portions of the Work. Each schedule of values shall be prepared in a form and substance acceptable to the Contractor (which form shall previously have been approved by the Owner) and supported by such data as may be necessary to substantiate its accuracy. The Contractor shall develop and implement procedures for the review and processing of applications by Subcontractors for progress and final payments. Payment packages shall include, but shall not be limited to, each of the following documents: schedule of values, sworn statements, and appropriate forms of full or partial construction lien waivers or other similar waivers and releases of claims.

AIA Document A201® – 2007. Copyright © 1911, 1915, 1918, 1925, 1937, 1951, 1958, 1961, 1963, 1966, 1970, 1976, 1987, 1997 and 2007 by The American Institute of Architects. All rights reserved. The "American Institute of Architects," "AIA," the AIA Logo, "A201," and "AIA Contract Documents" are registered trademarks and may not be used without permission. This document was produced by AIA software at 09:39:13 ET on 09/22/2020 under Order No.8752807719 which expires on 09/14/2021, is not for resale, is licensed for one-time use only, and may only be used in accordance with the AIA Contract Documents® Terms of Service. To report copyright violations, e-mail copyright@aia.org.
User Notes: (1516648771)

§ 5.3.2.6 Safety Programs. The Contractor shall provide a general review of safety programs developed by each of the Subcontractors, including a verification that each Subcontractor has submitted its report of the recommended safety precautions and programs, as required by the Contract Documents. If the Contractor observes a safety violation, the Contractor shall require a Subcontractor to correct it. After written notification to the Subcontractor to correct the safety violation, if the Subcontractor does not correct the problem in a timely fashion, the Contractor shall cause the Work to be corrected by other means. The performance of such services by the Contractor shall not relieve the Subcontractors of their responsibilities for performance of the Work and for the safety of persons and property, and for compliance with all federal, state and local statute, rules, regulations and orders applicable to the conduct of the Work. The Contractor shall conduct regular safety meetings with Subcontractors' superintendents to ensure the Subcontractors' compliance with federal, state or local statutes, rules, and regulations relating to the Workers' safety or any other aspect of the Work.

§ 5.3.2.7 Work. The Contractor shall determine in general that the Work of each Subcontractor is being performed in accordance with the requirements of the Contract Documents, and shall guard the Owner against defects and deficiencies in the Work. As appropriate, the Contractor shall require special inspection or testing, or make recommendations to the Architect regarding special inspection or testing, of Work not in accordance with the provisions of the Contract Documents whether or not such Work has been then fabricates, installed or completed, and shall reject Work which does not conform to the requirements of the Contract Documents. The Contractor shall coordinate any inspections which may be required by any governmental agencies.

§ 5.3.2.8 Interpretation. The Contractor shall consult with the Architect and the Owner if any Subcontractor requests interpretations of the meaning and intent of any of the Contract Documents, and shall assist in the resolution of questions, which may arise.

§ 5.3.2.9 Insurance Certificates. The Contractor shall receive certificates of insurance from the Subcontractors, and shall review such certificates for compliance with the requirements of the Contract Documents, and shall forward the original certificates to the Owner. No member of the Construction Team shall be permitted to commence any portion of the Work or have a presence at the Project Site without complying with all insurance requirements of the Contract Documents. The Contractor shall monitor the same to ensure the certificates of insurance remain current, and shall advise the Subcontractors of the impending expiration of their respective certificates, but the failure of Contractor to give such advice shall not, as between the Contractor and any of the Subcontractors, excuse the obligation of the Subcontractors to maintain current, unexpired certificates.

§ 5.3.2.10 System Readiness. The Contractor shall, in the company of the Architect and the Owner's maintenance personnel, observe the Subcontractors' evaluation of utilities, operational systems and equipment for readiness, and shall assist in their initial start-up and testing.

§ 5.3.2.11 Contractor and Subcontractors' Warranty Acknowledgment. The Contractor shall execute and deliver to the Owner, and shall cause anyone giving warranties that is contractually bound to the Contractor to execute and deliver to the Owner, the following Warranty Acknowledgment before a Certificate of Final Completion is issues:

WARRANTY ACKNOWLEDGMENT

> (Name of Subcontractor) ("Contractor") warrants that all of its Work complies with the requirements of the Contract Documents. If, within one (1) year after the date of Substantial Completion of the Work or designated portion of the Work, any of Contractor's Work is found to be not in accordance with the requirements of the Contract Documents, Contractor shall correct the Work at its sole expense promptly after receipt of written notice from the Owner. This one (1) year period shall be extended (1) with respect to portions of Work first performed after Substantial Completion by the period of time between Substantial Completion and the actual performance of Contractor's Work, and (2) with respect to warranty work for an additional one (1) year period following each correction. This obligation shall survive acceptance of the Work and termination of our contract.

This warranty shall be in addition to the terms of any other warranty or longer period of obligation specified in the Contract Documents, any applicable special warranty required by the Contract Documents, or the terms of any general warranty and is not in lieu of any of them. This warranty shall not be construed to establish a period of limitation with

AIA Document A201® – 2007. Copyright © 1911, 1915, 1918, 1925, 1937, 1951, 1958, 1961, 1963, 1966, 1970, 1976, 1987, 1997 and 2007 by The American Institute of Architects. All rights reserved. The "American Institute of Architects," "AIA," the AIA Logo, "A201," and "AIA Contract Documents" are registered trademarks and may not be used without permission. This document was produced by AIA software at 09:39:13 ET on 09/22/2020 under Order No.8752807719 which expires on 09/14/2021, is not for resale, is licensed for one-time use only, and may only be used in accordance with the AIA Contract Documents® Terms of Service. To report copyright violations, e-mail copyright@aia.org.
User Notes: (1516648771)

respect to other obligations which Contractor might have under the Contract Documents and has no relationship to the time within which the obligation to comply with the Contract Documents may be sought to be enforced or to the time which any proceeding may be commenced.

§ 5.4 CONTINGENT ASSIGNMENT OF SUBCONTRACTS

§ 5.4.1 Each subcontract agreement for a portion of the Work is assigned by the Contractor to the Owner, provided that

- **.1** assignment is effective only after termination of the Contract by the Owner for cause pursuant to Section 14.2 and only for those subcontract agreements that the Owner accepts by notifying the Subcontractor and Contractor in writing; and
- **.2** assignment is subject to the prior rights of the surety, if any, obligated under bond relating to the Contract.

When the Owner accepts the assignment of a subcontract agreement, the Owner assumes the Contractor's rights and obligations under the subcontract.

~~**§ 5.4.2** Upon such assignment, if the Work has been suspended for more than 30 days, the Subcontractor's compensation shall be equitably adjusted for increases in cost resulting from the suspension.~~

~~**§ 5.4.3** Upon such assignment to the Owner under this Section 5.4, the Owner may further assign the subcontract to a successor contractor or other entity. If the Owner assigns the subcontract to a successor contractor or other entity, the Owner shall nevertheless remain legally responsible for all of the successor contractor's obligations under the subcontract.~~

ARTICLE 6 CONSTRUCTION BY OWNER OR BY SEPARATE CONTRACTORS

§ 6.1 OWNER'S RIGHT TO PERFORM CONSTRUCTION AND TO AWARD SEPARATE CONTRACTS

§ 6.1.1 The Owner reserves the right but assumes no obligation to perform construction or operations related to the Project with the Owner's own forces, and to award separate contracts in connection with other portions of the Project or other construction or operations on the site under Conditions of the Contract identical or substantially similar to these including those portions related to ~~insurance and waiver of subrogation.~~ insurance. If the Contractor claims that delay or additional cost is involved because of such action by the Owner, the Contractor shall make such Claim as provided in Article 15.

§ 6.1.2 When separate contracts are awarded for different portions of the Project or other construction or operations on the site, the term "Contractor" in the Contract Documents in each case shall mean the Contractor who executes each separate Owner-Contractor ~~Agreement.~~Contract.

§ 6.1.3 The Owner shall provide for coordination of the activities of the Owner's own forces and of each separate contractor with the Work of the Contractor, who shall cooperate with them. The Contractor shall participate with other separate contractors and the Owner in reviewing their construction schedules. The Contractor shall make any revisions to the construction schedule deemed necessary after a joint review and mutual agreement. The construction schedules shall then constitute the schedules to be used by the Contractor, separate contractors and the Owner until subsequently revised.

§ 6.1.4 Unless otherwise provided in the Contract Documents, when the Owner performs construction or operations related to the Project with the Owner's own forces, the Owner shall be deemed to be subject to the same obligations and to have the same rights that apply to the Contractor under the Conditions of the Contract, including, without excluding others, those stated in Article 3, this Article 6 and Articles 10, 11 and 12.

§ 6.2 MUTUAL RESPONSIBILITY

§ 6.2.1 The Contractor shall afford the Owner and separate contractors reasonable opportunity for introduction and storage of their materials and equipment and performance of their activities, and shall connect and coordinate the Contractor's construction and operations with theirs as required by the Contract Documents.

§ 6.2.2 If part of the Contractor's Work depends for proper execution or results upon construction or operations by the Owner or a separate contractor, the Contractor shall, prior to proceeding with that portion of the Work, promptly

AIA Document A201® – 2007. Copyright © 1911, 1915, 1918, 1925, 1937, 1951, 1958, 1961, 1963, 1966, 1970, 1976, 1987, 1997 and 2007 by The American Institute of Architects. All rights reserved. The "American Institute of Architects," "AIA," the AIA Logo, "A201," and "AIA Contract Documents" are registered trademarks and may not be used without permission. This document was produced by AIA software at 09:39:13 ET on 09/22/2020 under Order No.8752807719 which expires on 09/14/2021, is not for resale, is licensed for one-time use only, and may only be used in accordance with the AIA Contract Documents® Terms of Service. To report copyright violations, e-mail copyright@aia.org.
User Notes: (1516648771)

report to the Architect apparent discrepancies or defects in such other construction that would render it unsuitable for such proper execution and results. Failure of the Contractor so to report shall constitute an acknowledgment that the Owner's or separate contractor's completed or partially completed construction is fit and proper to receive the Contractor's Work, except as to defects not then reasonably discoverable.

§ 6.2.3 The Contractor shall reimburse the Owner for costs the Owner incurs including costs that are payable to a separate contractor because of the Contractor's delays, improperly timed activities or defective construction. The Owner shall be responsible to the Contractor for costs the Contractor incurs because of a separate contractor's delays, improperly timed activities, damage to the Work or defective construction.

§ 6.2.4 The Contractor shall promptly remedy damage the Contractor wrongfully causes to completed or partially completed construction or to property of the Owner or separate contractors as provided in Section 10.2.5.

§ 6.2.5 The Owner and each separate contractor shall have the same responsibilities for cutting and patching as are described for the Contractor in Section 3.14.

§ 6.2.6 Subject to the provisions of, and rights to recover from, any property insurance that the Owner is responsible to maintain, the Contractor shall, at its expense, without recovery from the Owner, under the Contract Sum, or Guaranteed Maximum Price, or use of any contingency or otherwise, promptly remedy damage caused by any member of the Construction Team to completed or partially completed construction or to property of the Owner or separate contractors.

§ 6.2.7 Costs caused by delays or by improperly timed activities or defective construction shall be borne by the party responsible therefor.

§ 6.3 OWNER'S RIGHT TO CLEAN UP

If a dispute arises among the Contractor, separate contractors and the Owner as to the responsibility under their respective contracts for maintaining the premises and surrounding area free from waste materials and rubbish, the Owner may clean up and the Architect and Owner will allocate the cost among those ~~responsible.~~responsible in their sole discretion. The Owner's right to clean up shall in no event be deemed a duty, and should the Owner choose not to pursue this remedy, the Contractor necessitating such action shall remain fully responsible for the same.

ARTICLE 7 CHANGES IN THE WORK

§ 7.1 GENERAL

§ 7.1.1 Changes in the Work may be accomplished after execution of the Contract, and without invalidating the Contract, only by Change Order, Construction Change ~~Directive~~ Directive, written contract amendment or order for a minor change in the Work, subject to the limitations stated in this Article 7 and elsewhere in the Contract Documents.

§ 7.1.2 A Change Order shall be based upon agreement among the Owner, Contractor and Architect; a Construction Change Directive requires agreement by the Owner and Architect and may or may not be agreed to by the Contractor; an order for a minor change in the Work may be issued by the Architect ~~alone.~~alone with the Owner's prior approval.

§ 7.1.3 Changes in the Work shall be performed under applicable provisions of the Contract Documents, and the Contractor shall proceed promptly, unless otherwise provided in the Change Order, Construction Change Directive or order for a minor change in the Work.

§ 7.1.4 Changes in the Work may be made without notice to the Contractor's sureties, and absence of such notice shall not relieve such sureties of any of their obligations to the Owner. If notice of any extra Work or change in the Work affecting the general scope of the Work or the provisions of the Contract Documents is required by the provisions of any bond, to be given to any surety issuing such bonds, the giving of any such notice shall be the Contractor's sole responsibility.

§ 7.2 CHANGE ORDERS

§ 7.2.1 A Change Order is a written instrument prepared by the Architect and signed by the Owner, Contractor and Architect stating their agreement upon all of the following:

.1 The change in the Work;

.2 The amount of the adjustment, if any, in the Contract Sum; and

AIA Document A201® – 2007. Copyright © 1911, 1915, 1918, 1925, 1937, 1951, 1958, 1961, 1963, 1966, 1970, 1976, 1987, 1997 and 2007 by The American Institute of Architects. All rights reserved. The "American Institute of Architects," "AIA," the AIA Logo, "A201," and "AIA Contract Documents" are registered trademarks and may not be used without permission. This document was produced by AIA software at 09:39:13 ET on 09/22/2020 under Order No.8752807719 which expires on 09/14/2021, is not for resale, is licensed for one-time use only, and may only be used in accordance with the AIA Contract Documents® Terms of Service. To report copyright violations, e-mail copyright@aia.org.
User Notes: (1516648771)

.3 The extent of the adjustment, if any, in the Contract Time.

§ 7.2.2 Written agreement by the Owner, Architect and Contractor on any Change Order shall constitute a final settlement of and a waiver of and permanent bar to all claims by Architect or Contractor relating to the change in the Work which is the subject to the Change Order, including all direct and indirect costs associated with such change and any and all adjustments to the Contract Sum or Guaranteed Maximum Price and the Contract Time. The Contractor shall include the Work covered by such Change Orders in its Applications for Payment as if such Work were originally part of the Contract Documents.

§ 7.3 CONSTRUCTION CHANGE DIRECTIVES

§ 7.3.1 A Construction Change Directive is a written order prepared by the Architect and signed by the Owner and Architect, directing a change in the Work prior to agreement on adjustment, if any, in the Contract Sum or Contract Time, or both. The Owner may by Construction Change Directive, without invalidating the Contract, order changes in the Work within the general scope of the Contract consisting of additions, deletions or other revisions, the Contract Sum and Contract Time being adjusted accordingly. However, the Contract Time shall only be adjusted if the Contractor demonstrates the Construction Change Directive adversely affects the Construction Schedule.

§ 7.3.2 A Construction Change Directive shall be used in the absence of total agreement on the terms of a Change Order.

§ 7.3.3 If the Construction Change Directive provides for an adjustment to the Contract Sum, the adjustment shall be based on one or more of the following methods:

.1 Mutual acceptance of a lump sum properly itemized and supported by sufficient substantiating data to permit evaluation;

.2 Unit prices stated in the Contract Documents or subsequently agreed upon;

.3 Cost to be determined in a manner agreed upon by the parties and a mutually acceptable fixed or percentage fee; or

.4 As provided in Section 7.3.7.

§ 7.3.4 If unit prices are stated in the Contract Documents or subsequently agreed upon, and if quantities originally contemplated are materially changed in a proposed Change Order or Construction Change Directive so that application of such unit prices to quantities of Work proposed will cause substantial inequity to the Owner or Contractor, the applicable unit prices shall be equitably ~~adjusted.~~adjusted, unless the Contractor provided such unit prices as a part of a competitive bid, in which case the unit price may not increase.

§ 7.3.5 Upon receipt of a Construction Change Directive, the Contractor shall promptly proceed with the change in the Work involved and advise the Architect of the Contractor's agreement or disagreement with the method, if any, provided in the Construction Change Directive for determining the proposed adjustment in the Contract Sum or Contract Time. Contractor agreements to a Construction Change Directive shall require a follow-up writing or signature as contemplated in Section 7.3.6.

§ 7.3.6 A Construction Change Directive signed by the Contractor indicates the Contractor's agreement therewith, including adjustment in Contract Sum and Contract Time or the method for determining them. Such agreement shall be effective immediately and shall be recorded as a Change Order.

§ 7.3.7 If the Contractor does not respond promptly or disagrees with the method for adjustment in the Contract Sum, the Architect shall determine with the Owner's approval the method and the adjustment on the basis of reasonable expenditures and savings of those performing the Work attributable to the change, including, in case of an increase in the Contract Sum, an amount for overhead and profit as set forth in the ~~Agreement,~~ Contract, or if no such amount is set forth in the ~~Agreement, a reasonable amount.~~ Contract, a reasonable amount however, any such change shall not exceed five percent (5%) in the changes in the Work. In such case, and also under Section 7.3.3.3, the Contractor shall keep and present, in such form as the Architect may prescribe, an itemized accounting together with appropriate supporting data. Unless otherwise provided in the Contract Documents, costs for the purposes of this Section 7.3.7 shall be limited to the following:

.1 ~~Costs~~ Actual costs of labor, including social security, old age and unemployment insurance, fringe benefits required by agreement or custom, and workers' compensation insurance;

AIA Document A201® – 2007. Copyright © 1911, 1915, 1918, 1925, 1937, 1951, 1958, 1961, 1963, 1966, 1970, 1976, 1987, 1997 and 2007 by The American Institute of Architects. All rights reserved. The "American Institute of Architects," "AIA," the AIA Logo, "A201," and "AIA Contract Documents" are registered trademarks and may not be used without permission. This document was produced by AIA software at 09:39:13 ET on 09/22/2020 under Order No.8752807719 which expires on 09/14/2021, is not for resale, is licensed for one-time use only, and may only be used in accordance with the AIA Contract Documents® Terms of Service. To report copyright violations, e-mail copyright@aia.org.
User Notes: (1516648771)

.2 ~~Costs~~ Actual costs of materials, supplies and equipment, including cost of transportation, whether incorporated or consumed;

.3 Rental costs of machinery and equipment, exclusive of hand tools, whether rented from the Contractor or others;

.4 ~~Costs~~ Actual costs of premiums for all bonds and insurance, permit fees, and sales, use or similar taxes related to the Work; and

~~.5 Additional costs of supervision and field office personnel directly attributable to the change.~~

§ 7.3.8 The amount of credit to be allowed by the Contractor to the Owner for a deletion or change that results in a net decrease in the Contract Sum shall be actual net cost as confirmed by the Architect. When both additions and credits covering related Work or substitutions are involved in a change, the allowance for overhead and profit shall be figured on the basis of net increase, if any, with respect to that change.

§ 7.3.9 Pending final determination of the total cost of a Construction Change Directive to the Owner, the Contractor may request payment for undisputed Work completed under the Construction Change Directive in Applications for Payment. ~~The~~ For those undisputed portions, the Architect will make an interim determination for purposes of monthly certification for payment for those costs and certify for payment the amount that the Architect determines, in the Architect's professional judgment, to be reasonably justified. The Architect's interim determination of ~~cost~~ cost, if agreed to by the Owner in writing, shall adjust the Contract Sum on the same basis as a Change Order, subject to the right of ~~either party~~ the Contractor to disagree and assert a Claim in accordance with Article 15.

§ 7.3.10 When the Owner and Contractor agree in writing with a determination made by the Architect concerning the adjustments in the Contract Sum and Contract Time, or otherwise reach agreement upon the adjustments, in writing, such agreement shall be effective immediately and the Architect will prepare a Change Order. Change Orders may be issued for all or any part of a Construction Change Directive.

§ 7.3.11 In no event shall the Contractor be entitled to receive, and the Contractor hereby waives the right to receive any payment or any extension of time for additional or changed work, whether partially or fully completed or simply proposed, unless such additional work is authorized by a written Change Order or Construction Change Directive signed by the Owner, nor shall the Contractor be obligated to proceed with any such work. Only the Owner shall have the right to issue a written Change Order or Constructive Change Directive to the Contractor authorizing an addition, deletion or other revision in the scope of the Work and/or an adjustment in the Contract Sum or Guaranteed Maximum Price or the Construction Schedule.

§ 7.4 MINOR CHANGES IN THE WORK

The ~~Architect has~~ Architect, with the Owner's written approval, has the authority to order minor changes in the Work not involving adjustment in the Contract Sum or Guaranteed Maximum Price or extension of the Contract Time and not inconsistent with the intent of the Contract Documents. Such changes ~~will be effected by written order signed by the Architect and shall be binding on the Owner and Contractor.~~ shall be effected by written order and shall be binding on the Contractor. The Contractor shall carry out such written orders promptly. Architect shall not, without written approval of Owner, order changes in the Work under this Section 7.4.1 that (1) are inconsistent with the intent of the Contract Documents; (2) render the Drawings and Specifications not in material conformity with the Work; or (3) materially affect the quality, utility or general aesthetics of the Work or any component, or result in the use of materials or equipment which are not equivalent to or better than the materials and equipment set forth in the Drawings and Specifications prior to such change.

ARTICLE 8 TIME

§ 8.1 DEFINITIONS

§ 8.1.1 ~~Unless otherwise provided, Contract Time is the period of time, including authorized adjustments, allotted in the Contract Documents for Substantial Completion of the Work.~~ See Section 1.1 for Basic Definitions.

§ 8.1.2 The date of commencement of the Work is the date established in the ~~Agreement.~~ Contract.

§ 8.1.3 The date of Substantial Completion is the date certified by the Architect in accordance with Section 9.8.

§ 8.1.4 The term "day" as used in the Contract Documents shall mean calendar day unless otherwise specifically defined.

AIA Document A201® – 2007. Copyright © 1911, 1915, 1918, 1925, 1937, 1951, 1958, 1961, 1963, 1966, 1970, 1976, 1987, 1997 and 2007 by The American Institute of Architects. All rights reserved. The "American Institute of Architects," "AIA," the AIA Logo, "A201," and "AIA Contract Documents" are registered trademarks and may not be used without permission. This document was produced by AIA software at 09:39:13 ET on 09/22/2020 under Order No.8752807719 which expires on 09/14/2021, is not for resale, is licensed for one-time use only, and may only be used in accordance with the AIA Contract Documents® Terms of Service. To report copyright violations, e-mail copyright@aia.org.
User Notes: (1516648771)

§ 8.2 PROGRESS AND COMPLETION

§ 8.2.1 Time limits stated in the Contract Documents are of the essence of the Contract. By executing the ~~Agreement~~ Contract the Contractor confirms that the Contract Time ~~is~~ and the Construction Schedule contain a reasonable period for performing the Work.

§ 8.2.2 The Contractor shall not knowingly, except by agreement or instruction of the Owner in writing, prematurely commence operations on the site or elsewhere prior to the effective date of insurance required by Article ~~11 to be furnished by the Contractor and Owner.~~ 11, or delivery of the performance and payment bonds required by law, to be furnished by the Contractor. The date of commencement of the Work shall not be changed by the effective date of such insurance.

§ 8.2.3 The Contractor shall ~~proceed expeditiously with adequate forces and shall achieve Substantial Completion within the Contract Time.~~see to the diligent, expeditious performance of the Work, with adequate resources so that all the Work will be completed within the Contract Time. The Contractor shall require overtime, multiple shifts and any other action necessary to complete of the Work within the Contract Time, all without additional cost to the Owner except as otherwise specifically provided in Section 8.4 in a Change Order or Construction Change Directive. The Contractor shall not, without the Owner's prior written approval, reschedule or re-sequence the Work that will cause the date of Substantial Completion to be modified so that an action, approval, or activity of the Owner moves onto the critical path or otherwise becomes critical to the Contract Time so long as such action, approval, or activity would not in fact have been critical but for the rescheduling or re-sequencing.

§ 8.2.4 Should the Contractor fail, refuse or neglect to supply sufficient workers or to cause the delivery of equipment and materials promptly to prevent delay, or fail in any material respect to commence and prosecute the Work diligently in accordance with the Contract Documents, or if the Work falls behind schedule, the Owner may require the Contractor to take Extraordinary Measures and to have the members of the Construction Team do likewise, all at no additional cost to or compensation from the Owner unless otherwise agreed to in writing by the Owner. Such Extraordinary Measures shall continue until the progress of the Work complies with the stage of completion required by the Contract Documents. The Owner's right to require Extraordinary Measures is solely for the purpose of ensuring the Contractor's compliance with the Construction Schedule.

.1 The Contractor shall not be entitled to an adjustment in its compensation in connection with Extraordinary Measures required by the Owner under or pursuant to this Article 8 except as specifically provided in Section 8.4.2 or in a Change Order or Construction Change Directive.

.2 The Owner may exercise the rights furnished it under or pursuant to this Article 8 as frequently as necessary to ensure that the Contractor's performance of the Work will comply with any Milestone Date or completion date set forth in the Contract Documents.

.3 Subject to reasonable prior notice and opportunity to cure, and except to the extent caused by Owner delay, the Owner shall also have the right to offset against any amounts then or thereafter due to the Contractor, or to be reimbursed by the Contractor for, any costs incurred as a result of an increase in the Owner's own labor force or for overtime, Saturday, Sunday, and/or holiday work as a result of implementing Extraordinary Measures for which the Contractor is responsible to pay.

§ 8.3 DELAYS AND EXTENSIONS OF TIME

§ 8.3.1 ~~If the Contractor is delayed at any time in the commencement or progress of the Work by an act or neglect of the Owner or Architect, or of an employee of either, or of a separate contractor employed by the Owner; or by changes ordered in the Work; or by labor disputes, fire, unusual delay in deliveries, unavoidable casualties or other causes beyond the Contractor's control; or by delay authorized by the Owner pending mediation and arbitration; or by other causes that the Architect determines may justify delay, then the Contract Time shall be extended by Change Order for such reasonable time as the Architect may determine.~~ Except as provided in this Section 8.3, the Contractor shall be fully responsible for the timely completion of the Work in accordance with the Construction Schedule. The Contractor will use its best efforts to cause all members of the Construction Team to meet all Milestone Dates in the Construction Schedule and shall not be liable for delay caused by the Owner or Architect. The Contractor agrees to use its best efforts to avoid the occurrence of any cause for delay, to avoid any extension of performance dates, and to mitigate the effect of any delay that does occur. The Contract Time will be extended only under the exact

AIA Document A201® – 2007. Copyright © 1911, 1915, 1918, 1925, 1937, 1951, 1958, 1961, 1963, 1966, 1970, 1976, 1987, 1997 and 2007 by The American Institute of Architects. All rights reserved. The "American Institute of Architects," "AIA," the AIA Logo, "A201," and "AIA Contract Documents" are registered trademarks and may not be used without permission. This document was produced by AIA software at 09:39:13 ET on 09/22/2020 under Order No.8752807719 which expires on 09/14/2021, is not for resale, is licensed for one-time use only, and may only be used in accordance with the AIA Contract Documents® Terms of Service. To report copyright violations, e-mail copyright@aia.org.
User Notes: (1516648771)

circumstances described in this Section 8.3 and then if and only if the Contractor complies strictly (not substantially) with the requirements of this Section 8.3.

§ 8.3.2 ~~Claims relating to time shall be made in accordance with applicable provisions of Article 15.~~ Notices in connection with delays shall be made by the Contractor to the Owner in accordance with this Section 8.3.2. The Contractor shall use its best efforts to provide verbal notice to the Owner within twenty-four (24) hours after the commencement of a delay. It must in any event do so as soon as possible and not later than three (3) days after commencement of the delay. Any verbal notice given shall be confirmed in writing within four (4) days. If the Contractor fails to deliver verbal notice within three (3) days after the commencement of a delay, it shall not be entitled to any relief pertaining to the period of time before it gave verbal notice. If the Contractor fails to confirm any verbal notice within four (4) days after the verbal notice was given, it shall not be entitled to any relief for the period of time beginning after the passage of such four (4) days and ending when the confirmation is actually received by the Owner. And, if the Contractor fails to provide verbal notice within ten (10) days after the commencement of a delay or to confirm any verbal notice in writing within ten (10) days after the verbal notice was given, the Contractor shall be barred from seeking any relief whatsoever relating to the delay. The Contractor shall submit such information as may be required by the Owner to evaluate the Change Order Request. The Owner shall decide whether to grant, grant in part or deny the Change Order Request. Any extension of time or adjustment granted shall be memorialized in the form of a Change Order.

§ 8.3.3 ~~This Section 8.3 does not preclude recovery of damages for delay by either party under other provisions of the Contract Documents.~~Except in the case of changes to the Work covered by Article 7 or failure of the Owner to pay the Contractor for Work performed, the Contractor shall not be entitled to an extension of time unless set forth in a Change Order. The Contractor acknowledges that in preparing the Construction Schedule and in agreeing to the times or dates of completion required by the Contract Documents it will make a reasonable allowance for commercially anticipated delays. Adjustments in the Contract Time will be permitted only to the extent such delay (1) is not caused or contributed to, and could not have been anticipated, by the Contractor using the degree of diligence required by the Contract Documents, (2) could not be limited or avoided by the Contractor's timely notice to the Owner of the delay, and (3) is of a duration of not less than one (1) day.

§ 8.3.4 The Owner's exercise of any of its rights under the Contract Documents or the Owner's good faith exercise of any of its remedies, including requirement of correction or re-execution of any defective Work, regardless of the extent, number or frequency of the Owner's good faith exercise of such rights or remedies, shall not under any circumstances be construed as unreasonable interference with the Contractor's performance of the Work or an event of default.

§ 8.3.5 The Contractor shall use its best efforts to mitigate the effects of any delay.

§ 8.3.6 This Section 8.3 does not preclude the recovery of other damages by the Owner for delay under other provisions of the Contract. However, the Contractor acknowledges that the Schedule for the Work may change during the duration of the Project and that fact was taken into account by the Contractor when it agreed to the Contract Sum and entered into this Contract under the terms and conditions set forth herein. As a result, the Contractor shall not be entitled to any additional monies as a result of such schedule changes.

§ 8.4 NO DAMAGE FOR DELAY

§ 8.4.1 Except only as provided in Section 8.4.2 below, an extension in the Contract Time or adjustment of the Construction Schedule, to the extent permitted under Section 8.3, and the Contractor's rights in connection with a suspension of the Work, as provided in the Contract, shall be the sole and exclusive remedies (in lieu of all other remedies whatsoever) of the Contractor for any delay, interference, hindrance in the performance of the Work, loss of productivity, manpower inefficiencies, impact damages and similar claims and damages, whether or not contemplated b the parties. Except only as provided in Section 8.4.2, in no event shall the Contractor be entitled to any compensation or recovery of any damages in connection with any delay, including, without limitation, consequential damages, lost opportunity costs, impact damages or other similar remuneration. The Contractor hereby expressly waives and covenants and agrees not to assert any claims against the Owner for any damages, costs, losses or expenses of any nature whatsoever which any member of the Construction Team may incur as a result of any delays, interferences, suspensions, rescheduling, changes in sequences, congestion, disruptions, or the like arising from, out of or in connection with any act or omission of the Owner, its representatives or agents, it being understood and agreed

AIA Document A201® – 2007. Copyright © 1911, 1915, 1918, 1925, 1937, 1951, 1958, 1961, 1963, 1966, 1970, 1976, 1987, 1997 and 2007 by The American Institute of Architects. All rights reserved. The "American Institute of Architects," "AIA," the AIA Logo, "A201," and "AIA Contract Documents" are registered trademarks and may not be used without permission. This document was produced by AIA software at 09:39:13 ET on 09/22/2020 under Order No.8752807719 which expires on 09/14/2021, is not for resale, is licensed for one-time use only, and may only be used in accordance with the AIA Contract Documents® Terms of Service. To report copyright violations, e-mail copyright@aia.org.
User Notes: (1516648771)

that their sole and exclusive remedy in such event shall be an extension of the Contract Time, but only in accordance with the provisions of this Article 8.

§ 8.4.2 In the event of Owner Delay, the Contractor shall be entitled to an equitable adjustment in the Contract Sum or Guaranteed Maximum Price. This adjustment shall be based solely upon and limited to additional direct out-of-pocket expenses to the extent they are incurred directly as a result of the Owner Delay. Without limiting the generality of the foregoing, such out-of-pocket expenses shall be calculated on an "actual cost" basis, and shall exclude home office expense and other overhead, profit and the value of lost opportunities. However, the Contractor shall use its best efforts to avoid or reduce delay damages to any member of the Construction Team caused by Owner delay.

ARTICLE 9 PAYMENTS AND COMPLETION

§ 9.1 CONTRACT SUM

The Contract Sum is stated in the ~~Agreement~~ Contract and, including authorized adjustments, is the total amount payable by the Owner to the Contractor for performance of the Work under the Contract Documents.

§ 9.2 SCHEDULE OF VALUES

Where the Contract is based on a stipulated sum or Guaranteed Maximum Price, the Contractor shall submit to the Architect, before the first Application for Payment, a schedule of values allocating the entire Contract Sum to the various portions of the Work and prepared in such form and supported by such data to substantiate its accuracy as the Architect may require. The initial schedule of values shall be consistent with the Contract Sum prepared by Contractor and shall include actual Subcontractor bids. This schedule, unless objected to by the Architect, shall be used as a basis for reviewing the Contractor's Applications for Payment.

§ 9.3 APPLICATIONS FOR PAYMENT

§ 9.3.1 At least ten days before the date established for each progress payment, the Contractor shall submit to the Architect an itemized Application for Payment prepared in accordance with the schedule of values, if required under Section ~~9.2,~~ 9.2., for completed portions of the Work. Such application shall be notarized, if required, and supported by such data substantiating the Contractor's right to payment as the Owner or Architect may require, such as copies of requisitions from Subcontractors and material suppliers, and shall reflect retainage if provided for in the Contract Documents.

§ 9.3.1.1 As provided in Section 7.3.9, such applications may include requests for payment on account of changes in the Work that have been properly authorized by Construction Change Directives, or by interim determinations of the Architect, but not yet included in Change Orders. A request for payment of sums related to Work regarding Construction Change Directives shall, unless qualified in writing at the time of request, constitute full and complete consent to the Construction Change Directive(s) and to the issuance of a Change Order.

§ 9.3.1.2 Applications for Payment shall not include requests for payment for portions of the Work for which the Contractor does not intend to pay a Subcontractor or material supplier, unless such Work has been performed by others whom the Contractor intends to pay.

§ 9.3.1.3 The Contractor shall provide copies of its insurance certificates, bonds, and the same for all Subcontractors prior to submitting the first Application for Payment, unless required to be submitted sooner by the Owner or the Contract. The Contractor shall submit with each monthly Application for Payment (1) an Affidavit that payrolls, bills for materials and equipment, and other indebtedness connected with the Work for which the previous application was submitted and the Owner might in any way be responsible have been paid or otherwise satisfied, and (2) a release or waiver of liens arising out of the Contract from each Contractor and/or Subcontractor, materialmen, supplier and laborer or the Contractor addressing all previous Applications for Payment submitted for the Project.

§ 9.3.2 Unless otherwise provided in the Contract Documents, payments shall be made on account of materials and equipment delivered and suitably stored at the site for subsequent incorporation in the Work. If approved in advance by the Owner, payment may similarly be made for materials and equipment suitably stored off the site at a location agreed upon in writing. Payment for materials and equipment stored on or off the site shall be conditioned upon compliance by the Contractor with procedures satisfactory to the Owner to establish the Owner's title to such materials and equipment or otherwise protect the Owner's interest, and shall include the costs of applicable insurance, storage and transportation to the site for such materials and equipment stored off the site. Payment to Contractor for materials stored off site is discouraged. When circumstances indicate that the Owner's best interest is served by off-site storage,

AIA Document A201® – 2007. Copyright © 1911, 1915, 1918, 1925, 1937, 1951, 1958, 1961, 1963, 1966, 1970, 1976, 1987, 1997 and 2007 by The American Institute of Architects. All rights reserved. The "American Institute of Architects," "AIA," the AIA Logo, "A201," and "AIA Contract Documents" are registered trademarks and may not be used without permission. This document was produced by AIA software at 09:39:13 ET on 09/22/2020 under Order No.8752807719 which expires on 09/14/2021, is not for resale, is licensed for one-time use only, and may only be used in accordance with the AIA Contract Documents® Terms of Service. To report copyright violations, e-mail copyright@aia.org.
User Notes: (1516648771)

the Contractor shall make written request to the Owner for approval to include such material costs in his next progress payment. The Contractor's request shall include the following information:

.1 A list of the fabricated materials consigned to the Project site (which shall be clearly identified, giving the place of storage, together with copies of invoices and reasons why materials cannot be delivered to the site.

.2 Certification that items have been tagged for delivery to the Project and that they will not be used for another purpose.

.3 A letter from the Contractor's Surety indicating agreement to the arrangements and that payment to the Contractor shall not relieve either party of their responsibility to complete the Work.

.4 Evidence of adequate insurance covering the material in storage, which shall name the Owner as additionally insured.

.5 Costs incurred by the Owner and Architect to inspect material in off-site storage shall be paid by the Contractor.

.6 Subsequent pay requests shall itemize the materials and their cost which were approved on previous pay requests and remain in off-site storage.

.7 When a partial payment is allowed on account of material delivered on the site of the Work or in the vicinity thereof or under possession and control of the Contractor, but not yet incorporated therein, such material shall become the property of the Owner, but if such material is stolen, destroyed or damaged by casualty before being used, the Contractor will be required to replace it at its own expense.

§ 9.3.3 The Contractor warrants that title to all Work covered by an Application for Payment will pass to the Owner no later than the time of payment. The Contractor further warrants that upon submittal of an Application for Payment all Work for which Certificates for Payment have been previously issued and payments received from the Owner shall, to the best of the Contractor's knowledge, information and belief, be free and clear of liens, claims, security interests or encumbrances in favor of the Contractor, Subcontractors, material suppliers, or other persons or entities making a claim by reason of having provided labor, materials and equipment relating to the Work.

§ 9.3.4 Each Application for Payment shall be accompanied by the following, all in form and substance reasonably satisfactory to the Owner:

.1 A duly executed and acknowledged sworn statement with all required information provided, together with properly notarized sworn statements, from the Contractor and all of the Subcontractors; and

.2 Except as otherwise provided, duly executed unconditional releases in the form required by the Owner establishing payment or satisfaction of all obligations as reflected on the sworn statements referred to in Section 9.3.4.1, provided, however, that the Contractor may furnish with each Application for Payment applicable waivers of lien or releases and properly notarized sworn statements covering the immediately preceding Application for Payment, as opposed to the current Application for Payment, (i.e., 30 day lag), provided Final Payment shall not be forthcoming until final construction lien waivers or releases from all members of the Construction Team have been delivered.

.3 In addition to the final construction lien waiver, the Owner will require the Contractor and Subcontractors to provide a signed and notarized affidavit that releases and discharges the Owner and Owner's agents from all liability to the Contractor and Subcontractor, which has arisen or which shall arise in connection with any work performed or materials delivered to the Project.

§ 9.4 CERTIFICATES FOR PAYMENT

§ 9.4.1 The Architect will, within seven days after receipt of the Contractor's Application for Payment, either issue to the Owner a Certificate for Payment, with a copy to the Contractor, for such amount as the Architect determines is properly due, or notify the Contractor and Owner in writing of the Architect's reasons for withholding certification in whole or in part as provided in Section 9.5.1.

AIA Document A201® – 2007. Copyright © 1911, 1915, 1918, 1925, 1937, 1951, 1958, 1961, 1963, 1966, 1970, 1976, 1987, 1997 and 2007 by The American Institute of Architects. All rights reserved. The "American Institute of Architects," "AIA," the AIA Logo, "A201," and "AIA Contract Documents" are registered trademarks and may not be used without permission. This document was produced by AIA software at 09:39:13 ET on 09/22/2020 under Order No.8752807719 which expires on 09/14/2021, is not for resale, is licensed for one-time use only, and may only be used in accordance with the AIA Contract Documents® Terms of Service. To report copyright violations, e-mail copyright@aia.org.
User Notes: (1516648771)

§ 9.4.2 The issuance of a Certificate for Payment will constitute a representation by the Architect to the Owner, based on the Architect's evaluation of the Work and the data comprising the Application for Payment, that, to the best of the Architect's knowledge, information and belief, the Work has progressed to the point indicated and that the quality of the Work is in accordance with the Contract Documents. The foregoing representations are subject to an evaluation of the Work for conformance with the Contract Documents upon Substantial Completion, to results of subsequent tests and inspections, to correction of minor deviations from the Contract Documents prior to completion and to specific qualifications expressed by the Architect. The issuance of a Certificate for Payment will further constitute a representation that the Contractor is entitled to payment in the amount certified. However, the issuance of a Certificate for Payment will not be a representation that the Architect has ~~(1) made exhaustive or continuous on-site inspections to check the quality or quantity of the Work, (2)~~ reviewed construction means, methods, techniques, sequences or procedures, ~~(3) reviewed copies of requisitions received from Subcontractors and material suppliers and other data requested by the Owner to substantiate the Contractor's right to payment,~~ or ~~(4)~~ made examination to ascertain how or for what purpose the Contractor has used money previously paid on account of the Contract Sum.

§ 9.5 DECISIONS TO WITHHOLD CERTIFICATION

§ 9.5.1 The Architect may withhold a Certificate for Payment in whole or in part, to the extent reasonably necessary to protect the Owner, if in the Architect's opinion the representations to the Owner required by Section 9.4.2 cannot be made. If the Architect is unable to certify payment in the amount of the Application, the Architect will notify the Contractor and Owner as provided in Section 9.4.1. If the Contractor and Architect cannot agree on a revised amount, the Architect will promptly issue a Certificate for Payment for the amount for which the Architect is able to make such representations to the Owner. The Architect may also withhold a Certificate for Payment or, because of subsequently discovered evidence, may nullify the whole or a part of a Certificate for Payment previously issued, to such extent as may be necessary in the Architect's opinion to protect the Owner from loss for which the Contractor is responsible, including loss resulting from acts and omissions described in Section 3.3.2, because of

.1 defective Work not remedied;

.2 third party claims filed or reasonable evidence indicating probable filing of such claims unless security acceptable to the Owner is provided by the Contractor;

.3 failure of the Contractor to make payments properly to Subcontractors or for labor, materials or equipment;

.4 reasonable evidence that the Work cannot be completed for the unpaid balance of the Contract Sum;

.5 damage to the Owner or a separate contractor;

.6 reasonable evidence that the Work will not be completed within the Contract Time, and that the unpaid balance would not be adequate to cover actual or liquidated damages for the anticipated delay; or

.7 ~~repeated~~ failure to carry out the Work in accordance with the Contract ~~Documents.~~ Documents;

.8 failure to provide any documentation, Record Documents, certified weekly payroll reports, as required, etc., in a timely manner;

.9 Any failure by Contractor or a Subcontractor to fully perform any obligation under the Contract;

.10 Stop Work notice.

§ 9.5.2 When the above reasons for withholding certification are removed, certification will be made for amounts previously withheld.

§ 9.5.3 If the Architect withholds certification for payment under Section 9.5.1.3, the Owner may, at its sole option, issue joint checks to the Contractor and to any Subcontractor or material or equipment suppliers to whom the Contractor failed to make payment for Work properly performed or material or equipment suitably delivered. If the Owner makes payments by joint check, the Owner shall notify the Architect and the Architect will reflect such payment on the next Certificate for Payment.

§ 9.5.4 If the Contractor disputes any determination by the Owner or Architect with regard to any Certificate for Payment, the Contractor shall nevertheless continue to expeditiously perform the Work and such dispute shall provide no basis for any manner of suspension of the Contractor's performance of the Work.

§ 9.6 PROGRESS PAYMENTS

§ 9.6.1 After the Architect has issued a Certificate for Payment, the Owner shall make payment in the manner and within the time provided in the Contract Documents, and shall so notify the Architect.

AIA Document A201® – 2007. Copyright © 1911, 1915, 1918, 1925, 1937, 1951, 1958, 1961, 1963, 1966, 1970, 1976, 1987, 1997 and 2007 by The American Institute of Architects. All rights reserved. The "American Institute of Architects," "AIA," the AIA Logo, "A201," and "AIA Contract Documents" are registered trademarks and may not be used without permission. This document was produced by AIA software at 09:39:13 ET on 09/22/2020 under Order No.8752807719 which expires on 09/14/2021, is not for resale, is licensed for one-time use only, and may only be used in accordance with the AIA Contract Documents® Terms of Service. To report copyright violations, e-mail copyright@aia.org.
User Notes: (1516648771)

§ 9.6.2 The Contractor shall pay each Subcontractor no later than seven days after receipt of payment from the Owner the amount to which the Subcontractor is entitled, reflecting percentages actually retained from payments to the Contractor on account of the Subcontractor's portion of the Work. The Contractor shall, by appropriate agreement with each Subcontractor, require each Subcontractor to make payments to Sub-subcontractors in a similar manner.

§ 9.6.3 The Architect will, on request, furnish to a Subcontractor, if practicable, information regarding percentages of completion or amounts applied for by the Contractor and action taken thereon by the Architect and Owner on account of portions of the Work done by such Subcontractor.

§ 9.6.4 The Owner has the right to request written evidence from the Contractor that the Contractor has properly paid Subcontractors and material and equipment suppliers amounts paid by the Owner to the Contractor for subcontracted Work. If the Contractor fails to furnish such evidence within seven days, the Owner shall have the right to contact Subcontractors to ascertain whether they have been properly paid. Neither the Owner nor Architect shall have an obligation to pay or to see to the payment of money to a Subcontractor, except as may otherwise be required by law.

§ 9.6.5 Contractor payments to material and equipment suppliers shall be treated in a manner similar to that provided in Sections 9.6.2, 9.6.3 and 9.6.4. The Owner may, in its sole discretion, after providing Contractor with ten (10) days prior written notice, make direct payments to the Contractor's Subcontractors, material men, laborers or claimants relating to labor or material provided to the Contractor for which the Contractor has not provided a waiver of lien, in the event the Subcontractors, material men, laborers or claimants threaten to or actually cease providing labor and/or materials for the Project such that, in the Owner's determination, progress of the Project and the Project's schedule are jeopardized. All payments made pursuant to this section shall be considered the same as if paid directly to the Contractor and shall constitute partial payment of the Contract Sum. In the event the Contractor disagrees with the amount proposed to be paid to one or more Subcontractors, material men, laborers or claimants, the Contractor shall provide a bond in the amount the Contractor believes the Owner will overpay, within ten (10) days of receipt of notice, or be barred from making any claim that the amount of the direct payment was incorrect. Payment under this provision shall not jeopardize any other remedy available to the Owner.

§ 9.6.6 A Certificate for Payment, a progress payment, or partial or entire use or occupancy of the Project by the Owner shall not constitute acceptance of Work not in accordance with the Contract Documents.

§ 9.6.7 Unless ~~the Contractor provides the Owner with a payment bond in the full penal sum of the Contract Sum, payments received by the Contractor for Work properly performed by Subcontractors and suppliers shall be held by the Contractor for those Subcontractors or suppliers who performed Work or furnished materials, or both, under contract with the Contractor for which payment was made by the Owner. Nothing contained herein shall require money to be placed in a separate account and not commingled with money of the Contractor, shall create any fiduciary liability or tort liability on the part of the Contractor for breach of trust or shall entitle any person or entity to an award of punitive damages against the Contractor for breach of the requirements of this provision.~~otherwise provided in the Contract or Contract Documents, the Owner may retain out of each progress payment a "Retainage" equal to ten percent (10%) of that payment. Retainage will be paid upon Final Completion and acceptance of the Work in accordance with Section 9.10. Upon mutual agreement of the Owner, the Architect and the Contractor, payment in full may be made to subcontractors whose Work is fully completed during early stages of the Project. The Contractor acknowledges and agrees that payments by the Owner shall only be made in respect of Applications for Payments, or portions thereof, reasonably approved by the Owner. If the Contractor disputes any good faith determination by the Owner with regard to any Certificate of Payment, or amount paid by the Owner in respect thereof, the Contractor shall nevertheless expeditiously continue to prosecute the Work while such dispute is being resolved.

§ 9.7 FAILURE OF PAYMENT

If the Architect does not issue a Certificate for Payment, through no fault of the Contractor, within seven days after receipt of the Contractor's Application for Payment, or if the Owner does not pay the Contractor within seven days after the date established in the Contract Documents the amount certified by the Architect or awarded by binding dispute resolution, then the Contractor may, upon seven additional days' written notice to the Owner and Architect, stop the Work until payment of the amount owing has been received. The Contract Time shall be extended appropriately and the Contract Sum shall be increased by the amount of the Contractor's reasonable costs of shut-down, delay and start-up, plus interest as provided for in the Contract Documents.

AIA Document A201® – 2007. Copyright © 1911, 1915, 1918, 1925, 1937, 1951, 1958, 1961, 1963, 1966, 1970, 1976, 1987, 1997 and 2007 by The American Institute of Architects. All rights reserved. The "American Institute of Architects," "AIA," the AIA Logo, "A201," and "AIA Contract Documents" are registered trademarks and may not be used without permission. This document was produced by AIA software at 09:39:13 ET on 09/22/2020 under Order No.8752807719 which expires on 09/14/2021, is not for resale, is licensed for one-time use only, and may only be used in accordance with the AIA Contract Documents® Terms of Service. To report copyright violations, e-mail copyright@aia.org.
User Notes: (1516648771)

§ 9.8 SUBSTANTIAL COMPLETION

§ 9.8.1 Substantial Completion is the stage in the progress of the Work when the Work or designated portion thereof is sufficiently complete in accordance with the Contract Documents so that the Owner can occupy or utilize the Work for its intended use.

§ 9.8.2 When the Contractor considers that the Work, or a portion thereof which the Owner agrees to accept separately, is substantially complete, the Contractor shall prepare and submit to the Architect a ~~comprehensive list~~ Punchlist of items to be completed or corrected prior to final payment. Failure to include an item on such ~~list does~~ Punchlistdoes not alter the responsibility of the Contractor to complete all Work in accordance with the Contract Documents.

§ 9.8.3 Upon receipt of the Contractor's ~~list,~~ Punchlist, the Architect will make an inspection to determine whether the Work or designated portion thereof is substantially complete. If the Architect's inspection discloses any item, whether or not included on the Contractor's ~~list,~~ Punchlist, which is not sufficiently complete in accordance with the Contract Documents so that the Owner can occupy or utilize the Work or designated portion thereof for its intended use, the Contractor shall, before issuance of the Certificate of Substantial Completion, complete or correct such item upon notification by the Architect. In such case, the Contractor shall then submit a request for another inspection by the Architect to determine Substantial Completion.

§ 9.8.4 When the Work or designated portion thereof is substantially complete, the Architect will prepare a Certificate of Substantial Completion that shall establish the date of Substantial Completion, shall establish responsibilities of the Owner and Contractor for security, maintenance, heat, utilities, damage to the Work and insurance, and shall fix the time within which the Contractor shall finish all items on the ~~list~~ Punchlist accompanying the Certificate. Warranties required by the Contract Documents shall commence on the date ~~of Substantial Completion of the Work or designated portion thereof unless otherwise provided in the Certificate of Substantial Completion.~~of the Work by Owner following final completion and final payment under Section 9.10.

§ 9.8.5 The Certificate of Substantial Completion shall be submitted to the Owner and Contractor for their written acceptance of responsibilities assigned to them in such Certificate. Upon such acceptance and consent of surety, if any, the Owner shall make payment of retainage applying to such Work or designated portion thereof. Such payment shall be adjusted for Work that is incomplete or not in accordance with the requirements of the Contract Documents.

§ 9.8.6 Notwithstanding Sections 9.8.1 and 9.8.2, as a condition precedent to establishing the date of Substantial Completion, the Contractor shall prepare and submit to the Architect a comprehensive list of items to be completed or correct (a "punch list"). The Contractor shall respond immediately to correct Work deficiencies and/or punch list items. Should the Contractor fail to make corrections in a timely fashion, but not later than thirty (30) calendar days from the date of Substantial Completion or notification of the required corrections, whichever is earlier, such Work may be corrected by the Owner at the Contractor's sole expense, and the Contract Sum may be adjusted accordingly.

§ 9.8.7 Prior to the final payment, Owner shall make a payment equal to the entire balance of the Contract Sum less one hundred fifty percent (150%) of the estimated cost to complete the "punch list" items. This payment shall be due within thirty (30) days after the earlier of (1) receipt of a Temporary or Conditional Certificate of Occupancy for all the Work required under this Agreement from the State of Michigan, (2) completion of Project pursuant to the Contract Documents.

§ 9.9 PARTIAL OCCUPANCY OR USE

§ 9.9.1 The Owner may occupy or use any completed or partially completed portion of the Work at any stage when such portion is designated by separate agreement with the Contractor, provided such occupancy or use is consented to by the insurer as required under Section 11.3.1.5 and authorized by public authorities having jurisdiction over the Project. Such partial occupancy or use may commence whether or not the portion is substantially complete, provided the Owner and Contractor have accepted in writing the responsibilities assigned to each of them for payments, retainage, if any, security, maintenance, heat, utilities, damage to the Work and insurance, and have agreed in writing concerning the period for correction of the Work and commencement of warranties required by the Contract Documents. When the Contractor considers a portion substantially complete, the Contractor shall prepare and submit a list to the Architect as provided under Section 9.8.2. Consent of the Contractor to partial occupancy or use shall not be unreasonably withheld. The stage of the progress of the Work shall be determined by written agreement between the Owner and Contractor or, if no agreement is reached, by decision of the Architect.

AIA Document A201® – 2007. Copyright © 1911, 1915, 1918, 1925, 1937, 1951, 1958, 1961, 1963, 1966, 1970, 1976, 1987, 1997 and 2007 by The American Institute of Architects. All rights reserved. The "American Institute of Architects," "AIA," the AIA Logo, "A201," and "AIA Contract Documents" are registered trademarks and may not be used without permission. This document was produced by AIA software at 09:39:13 ET on 09/22/2020 under Order No.8752807719 which expires on 09/14/2021, is not for resale, is licensed for one-time use only, and may only be used in accordance with the AIA Contract Documents® Terms of Service. To report copyright violations, e-mail copyright@aia.org.
User Notes: (1516648771)

§ 9.9.2 Immediately prior to such partial occupancy or use, the Owner, Contractor and Architect shall jointly inspect the area to be occupied or portion of the Work to be used in order to determine and record the condition of the Work.

§ 9.9.3 Unless otherwise agreed upon, partial occupancy or use of a portion or portions of the Work shall not constitute acceptance of Work not complying with the requirements of the Contract Documents.

§ 9.10 FINAL COMPLETION AND FINAL PAYMENT

§ 9.10.1 Upon ~~receipt~~ completion of the Work the Contractor's shall provide to the Architect a written notice that the Work is ready for final inspection and acceptance and upon receipt of a final Application for Payment, the Architect will promptly make such inspection and, when the Architect finds the Work acceptable under the Contract Documents and the Contract fully performed, the Architect will promptly issue a final Certificate for Payment stating that to the best of the Architect's knowledge, information and belief, and on the basis of the Architect's on-site visits and inspections, the Work has been completed in accordance with terms and conditions of the Contract Documents and that the entire balance found to be due the Contractor and noted in the final Certificate is due and payable. The Architect's final Certificate for Payment will constitute a further representation that conditions listed in Section 9.10.2 as precedent to the Contractor's being entitled to final payment have been fulfilled.

§ 9.10.2 Neither final payment nor any remaining retained percentage shall become due until the Contractor submits to the Architect (1) an affidavit that payrolls, bills for materials and equipment, and other indebtedness connected with the Work for which the Owner or the Owner's property might be responsible or encumbered (less amounts withheld by Owner) have been paid or otherwise satisfied, (2) a certificate evidencing that insurance required by the Contract Documents to remain in force after final payment is currently in effect and will not be canceled or allowed to expire until at least 30 days' prior written notice has been given to the Owner, (3) a written statement that the Contractor knows of no substantial reason that the insurance will not be renewable to cover the period required by the Contract Documents, (4) consent of surety, if any, to final payment and (5), ~~if~~ an affidavit that states the Work is fully completed and performed in accordance with the Contract Documents and is satisfactory to the Architect and the Owner, (6) in the event of Contractor bankruptcy, at the Owner's option, an order entered by the court having jurisdiction of the Contractor's insolvency proceeding authorizing such payment, (7) a general release executed by the Contractor on a form provided by the Architect; and (8)if required by the Owner, other data establishing payment or satisfaction of obligations, such as close out documentation, the other documentation required by the Contract Documents, receipts, releases and waivers of liens, claims, security interests or encumbrances arising out of the Contract, to the extent and in such form as may be designated by the Owner. If a Subcontractor refuses to furnish a release or waiver required by the Owner, the Contractor may furnish a bond satisfactory to the Owner to indemnify the Owner against such lien. If such lien remains unsatisfied after payments are made, the Contractor shall refund to the Owner all money that the Owner may be compelled to pay in discharging such lien, including all costs and ~~reasonable~~ actual attorneys' fees.

§ 9.10.3 If, after Substantial Completion of the Work, final completion thereof is materially delayed through no fault of the Contractor or by issuance of Change Orders affecting final completion, and the Architect so confirms, the Owner shall, upon application by the Contractor and certification by the Architect, and without terminating the Contract, make payment of the balance due for that portion of the Work fully completed and accepted. If the remaining balance for Work not fully completed or corrected is less than retainage stipulated in the Contract Documents, and if bonds have been furnished, the written consent of surety to payment of the balance due for that portion of the Work fully completed and accepted shall be submitted by the Contractor to the Architect prior to certification of such payment. Such payment shall be made under terms and conditions governing final payment, except that it shall not constitute a waiver of claims.

§ 9.10.4 The making of final payment shall constitute a waiver of Claims by the Owner except those arising from

- **.1** liens, Claims, security interests or encumbrances arising out of the Contract and unsettled;
- **.2** failure of the Work to comply with the requirements of the Contract Documents; or
- **.3** terms of special warranties required by the Contract ~~Documents.~~Documents;
- **.4** Owner's Claims arising after final payment;
- **.5** Owner's claims for indemnification; or
- **.6** Claims about which the Owner has previously given notice to the Contractor

AIA Document A201® – 2007. Copyright © 1911, 1915, 1918, 1925, 1937, 1951, 1958, 1961, 1963, 1966, 1970, 1976, 1987, 1997 and 2007 by The American Institute of Architects. All rights reserved. The "American Institute of Architects," "AIA," the AIA Logo, "A201," and "AIA Contract Documents" are registered trademarks and may not be used without permission. This document was produced by AIA software at 09:39:13 ET on 09/22/2020 under Order No.8752807719 which expires on 09/14/2021, is not for resale, is licensed for one-time use only, and may only be used in accordance with the AIA Contract Documents® Terms of Service. To report copyright violations, e-mail copyright@aia.org.
User Notes: (1516648771)

§ 9.10.5 Acceptance of final payment by the Contractor, a Subcontractor or material supplier shall constitute a waiver of claims by that payee except those previously made in writing and identified by that payee as unsettled at the time of final Application for Payment.

§ 9.10.6 The amount of the final Payment shall be the Contract Sum or Guaranteed Maximum Price unless the amount paid to date. If the aggregate of previous payments made by the Owner exceeds the amount due the Contractor, the Contractor shall immediately reimburse the difference to the Owner.

§ 9.10.7 Project Closeout. The requirements for Project Closeout begin at the start of a Project. This section outlines the integration of the closeout process into the Construction Phase. Project closeout requirements generally comprise of the following:

Certificate of Substantial Completion [by the Architect]
Certificate of occupancy, including proof of all final/ [closed] inspection permits
Operation & Maintenance Manuals
As-Constructed Record Drawings
Training of Owner's Personnel
Attic Stock Materials
Documents – Warranty, Asbestos free, Smoke & Flame Spread, etc.
Punchlist Completion (signed by the Architect and the Owner)
Copies of Shop Drawings, Product Data and Samples

ARTICLE 10 PROTECTION OF PERSONS AND PROPERTY

§ 10.1 SAFETY PRECAUTIONS AND PROGRAMS

~~The Contractor shall be responsible for initiating, maintaining and supervising all safety precautions and programs in connection with the performance of the Contract.~~

§ 10.1.1 The Contractor shall continuously maintain adequate protection of all Work from damage and shall protect the Owner's property from injury or loss. The Contractor shall repair any such damage, injury or loss at no cost to the Owner, except to the extent directly caused by agents or employees of the Owner. The Contractor shall adequately protect the Work and adjacent property as required by Applicable Laws, the Contract Documents, or as otherwise required, to cause no damage to the Work and adjacent property during the execution of the Work. This requirement shall also apply to structures above and below ground as conditions of the Work site require. The Contractor shall at all times observe and comply with all Applicable Laws which may in any manner affect the equipment and materials used in the proposed construction, those employed on the work, and the conduct of the Work. The Contractor shall hold harmless and indemnify the Owner and its Board (in its individual and official capacities), employees and administrators, against any claim or liability arising from the violation of any Applicable Laws, whether the violations are by the Contractor or any Subcontractor, Sub-subcontractor or any other person employed or engaged by the Contractor or Subcontractor.

§ 10.1.2 The Contractor is solely responsible to the Owner for health and safety at the Project site and, accordingly, shall be solely responsible for initiating, monitoring, maintaining and supervising all safety precautions and programs in connection with the performance of the Work. The foregoing does not relieve the Subcontractors of their responsibility to the Contractor for the safe performance of their Work in accordance with all Applicable Laws.

§ 10.1.3 The Contractor shall develop and implement a health and safety plan that complies with all Applicable Laws covering all activities on the Project site except those activities performed solely by the Owner. The Contractor shall provide the Owner a copy of such health and safety plan prior to commencement of Work. The Owner shall have no duty to review the plan and shall assume no duty by doing so.

§ 10.2 SAFETY OF PERSONS AND PROPERTY

§ 10.2.1 The Contractor shall take reasonable precautions for safety of, and shall provide reasonable protection to prevent damage, injury or loss to

- **.1** employees on the Work and other persons who may be affected thereby;
- **.2** the Work and materials and equipment to be incorporated therein, whether in storage on or off the site, under care, custody or control of the Contractor or the Contractor's Subcontractors or Sub-subcontractors; and

AIA Document A201® – 2007. Copyright © 1911, 1915, 1918, 1925, 1937, 1951, 1958, 1961, 1963, 1966, 1970, 1976, 1987, 1997 and 2007 by The American Institute of Architects. All rights reserved. The "American Institute of Architects," "AIA," the AIA Logo, "A201," and "AIA Contract Documents" are registered trademarks and may not be used without permission. This document was produced by AIA software at 09:39:13 ET on 09/22/2020 under Order No.8752807719 which expires on 09/14/2021, is not for resale, is licensed for one-time use only, and may only be used in accordance with the AIA Contract Documents® Terms of Service. To report copyright violations, e-mail copyright@aia.org.
User Notes: (1516648771)

.3 other property at the site or adjacent thereto, such as trees, shrubs, lawns, walks, pavements, roadways, structures and utilities not designated for removal, relocation or replacement in the course of construction.

§ 10.2.2 The Contractor shall comply with and give notices required by ~~applicable laws, statutes, ordinances, codes, rules and regulations, and lawful orders of public authorities~~ Applicable Laws, bearing on safety of persons or property or their protection from damage, injury or loss.

§ 10.2.3 The Contractor shall erect and maintain, as required by existing conditions and performance of the Contract, reasonable safeguards for safety and protection, including posting danger signs and other warnings against hazards, promulgating safety regulations and notifying owners and users of adjacent sites and utilities.

§ 10.2.4 ~~When~~ No use or storage of explosives or other hazardous materials or unusual methods shall be allowed at the Project site without the Owner's express written consent. If use or storage of explosives or other hazardous materials or equipment or unusual methods are ~~necessary~~ permitted by the Owner for execution of the Work, the Contractor shall exercise utmost care and carry on such activities under supervision of properly qualified ~~personnel.~~personnel, and shall store and use in compliance with all Applicable Laws.

§ 10.2.5 The Contractor shall promptly remedy damage and loss (other than damage or loss insured under property insurance required by the Contract Documents) to property referred to in Sections 10.2.1.2 and 10.2.1.3 caused in whole or in part by the Contractor, a Subcontractor, a Sub-subcontractor, or anyone directly or indirectly employed by any of them, or by anyone for whose acts they may be liable and for which the Contractor is responsible under Sections 10.2.1.2 and 10.2.1.3, except damage or loss attributable to acts or omissions of the Owner or Architect or anyone directly or indirectly employed by either of them, or by anyone for whose acts either of them may be liable, and not attributable to the fault or negligence of the Contractor. The foregoing obligations of the Contractor are in addition to the Contractor's obligations under Section 3.18.

§ 10.2.6 The Contractor shall designate a responsible member of the Contractor's organization at the site whose duty shall be the prevention of accidents. This person shall be the Contractor's superintendent unless otherwise designated by the Contractor in writing to the Owner and Architect.

§ 10.2.7 The Contractor shall not permit any part of the construction or site to be loaded so as to cause damage or create an unsafe condition.

§ 10.2.8 INJURY OR DAMAGE TO PERSON OR PROPERTY
If either party suffers injury or damage to person or property because of an act or omission of the other party, or of others for whose acts such party is legally responsible, written notice of such injury or damage, whether or not insured, shall be given to the other party within a reasonable time not exceeding 21 days after discovery. The notice shall provide sufficient detail to enable the other party to investigate the matter. The Contractor shall take all necessary precautions for the safety of employees and visitors on the Project site and shall comply with Applicable Laws and provisions of federal, state, and municipal safety laws and building codes to prevent accidents or injury to persons on, about or adjacent to the Project Site where the Work is being performed. The Contractor shall erect and properly maintain at all times, as required by the conditions and progress of the Work, all necessary safeguards for the protection of workers and the public. The Contractor shall post danger signs warning against the hazards created by such features of construction such as protruding nails, hoists, holes, elevator hatchways, scaffolding, window openings, stairways, falling material and other such features.

§ 10.2.9 When all or a portion of the Work is suspended for any reason, the Contractor shall be responsible for securely fastening down all coverings and protecting the Work from injury by any cause.

§ 10.2.10 The Contractor shall promptly report in writing to the Owner all accidents arising out of or in connection with the Work which cause death, personal injury, or property damage, giving full details and statements of any witnesses. In addition, if death, serious personal injuries, or serious property damages occur, the accident shall be reported immediately by telephone or messenger to the Owner. The obligations in this Section are in addition to the Contractor's reporting obligations under Applicable Laws.

AIA Document A201® – 2007. Copyright © 1911, 1915, 1918, 1925, 1937, 1951, 1958, 1961, 1963, 1966, 1970, 1976, 1987, 1997 and 2007 by The American Institute of Architects. All rights reserved. The "American Institute of Architects," "AIA," the AIA Logo, "A201," and "AIA Contract Documents" are registered trademarks and may not be used without permission. This document was produced by AIA software at 09:39:13 ET on 09/22/2020 under Order No.8752807719 which expires on 09/14/2021, is not for resale, is licensed for one-time use only, and may only be used in accordance with the AIA Contract Documents® Terms of Service. To report copyright violations, e-mail copyright@aia.org.
User Notes: (1516648771)

§ 10.3 HAZARDOUS MATERIALS

§ 10.3.1 The Contractor is responsible for compliance with any requirements included in the Contract Documents regarding hazardous materials. If the Contractor encounters a hazardous material or substance not addressed in the Contract ~~Documents and if reasonable precautions will be inadequate to prevent foreseeable bodily injury or death to persons resulting from a material or substance, including but not limited to asbestos or polychlorinated biphenyl (PCB), encountered on the site by the Contractor,~~ Documents, the Contractor shall, upon recognizing the condition, immediately stop Work in the affected area and report the condition to the Owner and Architect in writing. The Contractor is responsible for compliance with any requirements included in the Contract Documents regarding hazardous materials. If the Contractor encounters a hazardous material or substance not addressed in the Contract Documents, the Contractor shall, upon recognizing the condition, immediately stop Work in the affected area and report the condition to the Owner and Architect in writing.

§ 10.3.2 ~~Upon receipt of the Contractor's written notice, the Owner shall obtain the services of a licensed laboratory to verify the presence or absence of the material or substance reported by the Contractor and, in the event such material or substance is found to be present, to cause it to be rendered harmless. Unless otherwise required by the Contract Documents, the Owner shall furnish in writing to the Contractor and Architect the names and qualifications of persons or entities who are to perform tests verifying the presence or absence of such material or substance or who are to perform the task of removal or safe containment of such material or substance. The Contractor and the Architect will promptly reply to the Owner in writing stating whether or not either has reasonable objection to the persons or entities proposed by the Owner. If either the Contractor or Architect has an objection to a person or entity proposed by the Owner, the Owner shall propose another to whom the Contractor and the Architect have no reasonable objection. When the material or substance has been rendered harmless, Work in the affected area shall resume upon written agreement of the Owner and Contractor. By Change Order, the Contract Time shall be extended appropriately and the Contract Sum shall be increased in the amount of the Contractor's reasonable additional costs of shut-down, delay and start-up.~~Contractor shall not permit itself or any third party to use, generate, handle, store or dispose of any Hazardous Materials in, on, under, upon or affecting any of the Owner's property in violation of any Applicable Laws or regulation. Without limiting any other provisions of the Contract Documents, Contractor shall indemnify, defend and hold harmless the Owner, its Board of Education, its Board Members in their official and individual capacities, administrators, employees, agents, contractors, successors and assignees, from and against all liabilities, claims, losses, costs and expenses (specifically including, without limitation, attorneys', engineers', consultants' and experts' fees, costs and expenses) arising from (1) any breach of any representation or warranty made in this paragraph and/or (2) environmental conditions or noncompliance with any Applicable Laws or regulation that result, in the case of Contractor, from operations or the Work by Contractor or its agents, employees or Subcontractors. As used herein, the term "Hazardous Materials" shall mean (1) any hazardous or regulated substance, pollutant, contaminant, material, or waste as defined by any federal, state and local environmental laws, or regulations promulgated thereunder, including, but not limited to, Federal Water Pollution Control Act (33 U.S.C. §§ 1251 et seq.) ("Clean Water Act") the Resource Conservation & Recovery Act (42 U.S.C. §§ 6901 et seq.) ("RCRA"), Safe Drinking Water Act (42 U.S.C. §§ 300f-j-26 et seq.) (Toxic Substances Control Act (14 U.S.C. §§ 2601 et seq.) (Clean Air Act 42 U.S.C. §§ 7401 et seq.), the Comprehensive Environmental Response, Compensation and Liability Act (42 U.S.C. §§ 9601 et seq.) ("CERCLA"), the Emergency Planning and Community Right to Know Act, 42 U.S.C. §§ 11001 et seq.) ("EPCRA"), the Atomic Energy Act, 42 U.S.C. Sections 2014, et seq., and the Michigan Natural Resources and Environmental Protection Act (MCL§ 324.101 et seq.) or any other similar federal, state or local law or administrative rule or regulation of similar effect, each as amended and as in effect and as adopted as of the date of execution of this Contract, or date of Work, whichever is more protective of the Owner, (2) any other pollutant, contaminant, hazardous substance, solid waste, hazardous material, radioactive substance, toxic substance, noxious substance, hazardous waste, particulate matter, airborne or otherwise, chemical 2waste, medical waste, crude oil or any fraction thereof, radioactive waste, petroleum or petroleum-derived substance or waste, asbestos, PCBs, radon gas, all forms of natural gas, or any hazardous or toxic constituent of any of the foregoing, whether such substance is in liquid, solid or gaseous form, or (3) any such substance the release discharge or spill of which requires activity to achieve compliance with Applicable Law. This paragraph shall survive the expiration or earlier termination of the Contract.

§ 10.3.3 ~~To the fullest extent permitted by law, the Owner shall indemnify and hold harmless the Contractor, Subcontractors, Architect, Architect's consultants and agents and employees of any of them from and against claims, damages, losses and expenses, including but not limited to attorneys' fees, arising out of or resulting from performance of the Work in the affected area if in fact the material or substance presents the risk of bodily injury or death as described in Section 10.3.1 and has not been rendered harmless, provided that such claim, damage, loss or expense is attributable to bodily injury, sickness, disease or death, or to injury to or destruction of tangible property~~

AIA Document A201® – 2007. Copyright © 1911, 1915, 1918, 1925, 1937, 1951, 1958, 1961, 1963, 1966, 1970, 1976, 1987, 1997 and 2007 by The American Institute of Architects. All rights reserved. The "American Institute of Architects," "AIA," the AIA Logo, "A201," and "AIA Contract Documents" are registered trademarks and may not be used without permission. This document was produced by AIA software at 09:39:13 ET on 09/22/2020 under Order No.8752807719 which expires on 09/14/2021, is not for resale, is licensed for one-time use only, and may only be used in accordance with the AIA Contract Documents® Terms of Service. To report copyright violations, e-mail copyright@aia.org.
User Notes: (1516648771)

~~(other than the Work itself), except to the extent that such damage, loss or expense is due to the fault or negligence of the party seeking indemnity.~~The Owner shall not be responsible for any substances or Hazardous Materials which Contractor, its agents, employees or Subcontractors bring into the Project site, or Owner's property.

~~**§ 10.3.4** The Owner shall not be responsible under this Section 10.3 for materials or substances the Contractor brings to the site unless such materials or substances are required by the Contract Documents. The Owner shall be responsible for materials or substances required by the Contract Documents, except to the extent of the Contractor's fault or negligence in the use and handling of such materials or substances.~~

~~**§ 10.3.5** The Contractor shall indemnify the Owner for the cost and expense the Owner incurs (1) for remediation of a material or substance the Contractor brings to the site and negligently handles, or (2) where the Contractor fails to perform its obligations under Section 10.3.1, except to the extent that the cost and expense are due to the Owner's fault or negligence.~~

~~**§ 10.3.6** If, without negligence on the part of the Contractor, the Contractor is held liable by a government agency for the cost of remediation of a hazardous material or substance solely by reason of performing Work as required by the Contract Documents, the Owner shall indemnify the Contractor for all cost and expense thereby incurred.~~

§ 10.4 EMERGENCIES

In an emergency affecting safety of persons or property, the Contractor shall act, at the Contractor's discretion, to prevent threatened damage, injury or loss. Additional compensation or extension of time claimed by the Contractor on account of an emergency shall be determined as provided in Article 15 and Article 7.

ARTICLE 11 INSURANCE AND BONDS

§ 11.1 CONTRACTOR'S LIABILITY INSURANCE

§ 11.1.1 The Contractor shall purchase from and maintain in a company or companies lawfully authorized to do business in the jurisdiction in which the Project is located ~~such insurance as will~~ and must have an A.M. Best's Rating of "A" or better, such insurance as required by the Contractor under the Contract. Unless otherwise required by the Contract, said insurance shall protect the Contractor from claims set forth below which may arise out of or result from the Contractor's operations and completed operations under the Contract and for which the Contractor may be legally liable, whether such operations be by the Contractor or by ~~a Subcontractor~~ any member of the Construction Team or by anyone directly or indirectly employed by any of them, or by anyone for whose acts any of them may be liable:

.1 Claims under workers' compensation, disability benefit and other similar employee benefit acts that are applicable to the Work to be performed;

.2 Claims for damages because of bodily injury, occupational sickness or disease, or death of the Contractor's employees;

.3 Claims for damages because of bodily injury, sickness or disease, or death of any person other than the Contractor's employees;

.4 Claims for damages insured by usual personal injury liability coverage;

.5 Claims for damages, other than to the Work itself, because of injury to or destruction of tangible property, including loss of use resulting therefrom;

.6 Claims for damages because of bodily injury, death of a person or property damage arising out of ownership, maintenance or use of a motor vehicle;

.7 Claims for bodily injury or property damage arising out of completed operations; ~~and~~

.8 Claims involving contractual liability insurance applicable to the Contractor's obligations under Section ~~3.18.~~3.18;

.9 Liability insurance shall include all major divisions of coverage and e on a comprehensive basis including:

- Premises' Operations (deleting X, C, or U exclusions);
- Owner's and Contractor's Protective;
- Products and Completion Operations;
- Contractual – including specific for the Contractor's obligations under Paragraph 3.18;
- Any auto; and
- Broad Form Property Damage, including Completed Operations; and

.10 All Bonds required by law, including bid bond, performance bond and payment bond.

AIA Document A201® – 2007. Copyright © 1911, 1915, 1918, 1925, 1937, 1951, 1958, 1961, 1963, 1966, 1970, 1976, 1987, 1997 and 2007 by The American Institute of Architects. All rights reserved. The "American Institute of Architects," "AIA," the AIA Logo, "A201," and "AIA Contract Documents" are registered trademarks and may not be used without permission. This document was produced by AIA software at 09:39:13 ET on 09/22/2020 under Order No.8752807719 which expires on 09/14/2021, is not for resale, is licensed for one-time use only, and may only be used in accordance with the AIA Contract Documents® Terms of Service. To report copyright violations, e-mail copyright@aia.org.
User Notes: (1516648771)

§ 11.1.2 The insurance required by Section 11.1.1 shall be written for not less than limits of liability specified in the Contract or Contract Documents or required by law, whichever coverage is greater. Coverages, whether written on an occurrence or claims-made basis, shall be maintained without interruption from the date of commencement of the Work until the date of final payment and termination of any coverage required to be maintained after final payment, and, with respect to the Contractor's completed operations coverage, until the expiration of the period for correction of Work or for such other period for maintenance of completed operations coverage as specified in the Contract Documents.

§ 11.1.3 Certificates of insurance acceptable to the Owner shall be filed with the Owner prior to commencement of the Work and thereafter upon renewal or replacement of each required policy of insurance. Owner shall be named as an additional insured. These certificates and the insurance policies required by this Section 11.1 shall contain a provision that coverages afforded under the policies will not be canceled or allowed to expire until at least 30 days' prior written notice has been given ~~to the Owner.~~ to the Owner and shall be endorsed to name the Owner as an additional insured. An additional certificate evidencing continuation of liability coverage, including coverage for completed operations, shall be submitted with the final Application for Payment as required by Section 9.10.2 and thereafter upon renewal or replacement of such coverage until the expiration of the time required by Section 11.1.2. Information concerning reduction of coverage on account of revised limits or claims paid under the General Aggregate, or both, shall be furnished by the Contractor with reasonable ~~promptness.~~promptness, but not less than 30 days prior to any reduction in coverage.

§ 11.1.4 The Contractor shall cause the commercial liability coverage required by the Contract Documents to include (1) the Owner, the Architect and the Architect's ~~consultants~~ Consultants as additional insureds for claims caused in whole or in part by the Contractor's negligent acts or omissions during the Contractor's operations; and (2) the Owner as an additional insured for claims caused in whole or in part by the Contractor's negligent acts or omissions during the Contractor's completed operations.

§ 11.2 OWNER'S LIABILITY INSURANCE

The Owner shall be responsible for purchasing and maintaining the Owner's usual liability insurance.

§ 11.3 PROPERTY INSURANCE

§ 11.3.1 Unless otherwise provided, the Owner shall purchase and maintain, in a company or companies lawfully authorized to do business in the jurisdiction in which the Project is located, property insurance written on a builder's risk "all-risk" or equivalent policy form in the amount ~~of the initial Contract Sum, plus value of subsequent Contract Modifications and cost of materials supplied or installed by others, comprising total value for the entire Project at the site on a replacement cost basis without optional deductibles. Such property insurance shall be maintained, unless otherwise provided in the Contract Documents or otherwise agreed in writing by all persons and entities who are beneficiaries of such insurance, until final payment has been made as provided in Section 9.10 or until no person or entity other than the Owner has an insurable interest in the property required by this Section 11.3 to be covered, whichever is later. This insurance shall include interests of the Owner, the Contractor, Subcontractors and Sub-subcontractors in the Project.~~and with deductibles reasonably determined by Owner.

§ 11.3.1.1 Property insurance shall be on an "all-risk" or equivalent policy form and shall include, without limitation, insurance against the perils of fire (with extended coverage) and physical loss or damage including, without duplication of coverage, theft, vandalism, malicious mischief, collapse, earthquake, flood, windstorm, falsework, testing and startup, temporary buildings and debris removal including demolition occasioned by enforcement of any applicable legal ~~requirements, and shall cover reasonable compensation for Architect's and Contractor's services and expenses required as a result of such insured loss.~~requirements.

§ 11.3.1.2 If the Owner does not intend to purchase such property insurance required by the Contract and with all of the coverages in the amount described above, the Owner shall so inform the Contractor in writing prior to commencement of the Work. The Contractor may then effect insurance that will protect the interests of the Contractor, Subcontractors and Sub-subcontractors in the Work, and by appropriate Change Order the cost thereof shall be charged to the Owner. If the Contractor is damaged by the failure or neglect of the Owner to purchase or maintain insurance as described above, without so notifying the Contractor in writing, then the Owner shall bear all reasonable costs properly attributable thereto.

AIA Document A201® – 2007. Copyright © 1911, 1915, 1918, 1925, 1937, 1951, 1958, 1961, 1963, 1966, 1970, 1976, 1987, 1997 and 2007 by The American Institute of Architects. All rights reserved. The "American Institute of Architects," "AIA," the AIA Logo, "A201," and "AIA Contract Documents" are registered trademarks and may not be used without permission. This document was produced by AIA software at 09:39:13 ET on 09/22/2020 under Order No.8752807719 which expires on 09/14/2021, is not for resale, is licensed for one-time use only, and may only be used in accordance with the AIA Contract Documents® Terms of Service. To report copyright violations, e-mail copyright@aia.org.
User Notes: (1516648771)

§ 11.3.1.3 ~~If~~ Except as otherwise provided in the Contract Documents, if the property insurance requires deductibles, the Owner shall pay costs not covered because of such deductibles.

§ 11.3.1.4 ~~This~~ If approved in writing by the Owner, this property insurance shall cover portions of the Work stored off the ~~site, and also portions of the Work in transit.~~site.

§ 11.3.1.5 Partial occupancy or use in accordance with Section 9.9 shall not commence until the insurance company or companies providing property insurance have consented to such partial occupancy or use by endorsement or otherwise. The Owner and the Contractor shall take reasonable steps to obtain consent of the insurance company or companies and shall, without mutual written consent, take no action with respect to partial occupancy or use that would cause cancellation, lapse or reduction of insurance. Property insurance coverage for Contractor's owned or hired equipment, tools, automobiles, and materials not incorporated into the final Work shall be the sole responsibility of the Contractor.

§ 11.3.2 BOILER AND MACHINERY INSURANCE

The Owner shall purchase and maintain boiler and machinery insurance required by the Contract Documents or by law, which shall specifically cover such insured objects during installation and until final acceptance by the ~~Owner; this insurance shall include interests of the Owner, Contractor, Subcontractors and Sub-subcontractors in the Work, and the Owner and Contractor shall be named insureds.~~Owner.

§ 11.3.3 LOSS OF USE INSURANCE

The Owner, at the Owner's option, may purchase and maintain such insurance as will insure the Owner against loss of use of the Owner's property due to fire or other hazards, however caused. The Owner waives all rights of action against the Contractor for loss of use of the Owner's property, including consequential losses due to fire or other hazards however caused.

§ 11.3.4 If the Contractor requests in writing that insurance for risks other than those described herein or other special causes of loss be included in the property insurance policy, the Owner shall, if possible, include such insurance, and the cost thereof shall be charged to the Contractor by appropriate Change Order.

§ 11.3.5 ~~If during the Project construction period the Owner insures properties, real or personal or both, at or adjacent to the site by property insurance under policies separate from those insuring the Project, or if after final payment property insurance is to be provided on the completed Project through a policy or policies other than those insuring the Project during the construction period, the Owner shall waive all rights in accordance with the terms of Section 11.3.7 for damages caused by fire or other causes of loss covered by this separate property insurance. All separate policies shall provide this waiver of subrogation by endorsement or otherwise.~~

§ 11.3.6 Before an exposure to loss may occur, the Owner shall ~~file with~~ provide the Contractor a copy of each policy that includes insurance coverages required by this Section 11.3. ~~Each policy shall contain all generally applicable conditions, definitions, exclusions and endorsements related to this Project.~~ . Each policy shall contain a provision that the policy will not be canceled or allowed to expire, and that its limits will not be reduced, until at least 30 days' prior written notice has been given to the Contractor.

§ 11.3.7 WAIVERS OF SUBROGATION

~~The Owner and Contractor waive all rights against (1) each other and any of their subcontractors, sub-subcontractors, agents and employees, each of the other, and (2) the Architect, Architect's consultants, separate contractors described in Article 6, if any, and any of their subcontractors, sub-subcontractors, agents and employees, for damages caused by fire or other causes of loss to the extent covered by property insurance obtained pursuant to this Section 11.3 or other property insurance applicable to the Work, except such rights as they have to proceeds of such insurance held by the Owner as fiduciary. The Owner or Contractor, as appropriate, shall require of the Architect, Architect's consultants, separate contractors described in Article 6, if any, and the subcontractors, sub-subcontractors, agents and employees of any of them, by appropriate agreements, written where legally required for validity, similar waivers each in favor of other parties enumerated herein. The policies shall provide such waivers of subrogation by endorsement or otherwise. A waiver of subrogation shall be effective as to a person or entity even though that person or entity would otherwise have a duty of indemnification, contractual or otherwise, did not pay the insurance premium directly or indirectly, and whether or not the person or entity had an insurable interest in the property damaged.~~

AIA Document A201® – 2007. Copyright © 1911, 1915, 1918, 1925, 1937, 1951, 1958, 1961, 1963, 1966, 1970, 1976, 1987, 1997 and 2007 by The American Institute of Architects. All rights reserved. The "American Institute of Architects," "AIA," the AIA Logo, "A201," and "AIA Contract Documents" are registered trademarks and may not be used without permission. This document was produced by AIA software at 09:39:13 ET on 09/22/2020 under Order No.8752807719 which expires on 09/14/2021, is not for resale, is licensed for one-time use only, and may only be used in accordance with the AIA Contract Documents® Terms of Service. To report copyright violations, e-mail copyright@aia.org.
User Notes: (1516648771)

§ 11.3.7.1 A loss insured under the Owner's property insurance shall be adjusted by the Owner as fiduciary and made payable to the Owner as fiduciary for the Contractor, Subcontractor and suppliers, as their interests may appear. The Contractor shall pay Subcontractors their just shares of insurance proceeds received by the Contractor, and by appropriate agreements, written where legally required for validity, shall require Subcontractors to make payments to their Sub-subcontractors in similar manner.

§ 11.3.8 ~~A loss insured under the Owner's property insurance shall be adjusted by the Owner as fiduciary and made payable to the Owner as fiduciary for the insureds, as their interests may appear, subject to requirements of any applicable mortgagee clause and of Section 11.3.10. The Contractor shall pay Subcontractors their just shares of insurance proceeds received by the Contractor, and by appropriate agreements, written where legally required for validity, shall require Subcontractors to make payments to their Sub-subcontractors in similar manner.~~The Owner as fiduciary shall have the power to adjust and settle a loss with insurers.

~~**§ 11.3.9** If required in writing by a party in interest, the Owner as fiduciary shall, upon occurrence of an insured loss, give bond for proper performance of the Owner's duties. The cost of required bonds shall be charged against proceeds received as fiduciary. The Owner shall deposit in a separate account proceeds so received, which the Owner shall distribute in accordance with such agreement as the parties in interest may reach, or as determined in accordance with the method of binding dispute resolution selected in the Agreement between the Owner and Contractor. If after such loss no other special agreement is made and unless the Owner terminates the Contract for convenience, replacement of damaged property shall be performed by the Contractor after notification of a Change in the Work in accordance with Article 7.~~

~~**§ 11.3.10** The Owner as fiduciary shall have power to adjust and settle a loss with insurers unless one of the parties in interest shall object in writing within five days after occurrence of loss to the Owner's exercise of this power; if such objection is made, the dispute shall be resolved in the manner selected by the Owner and Contractor as the method of binding dispute resolution in the Agreement. If the Owner and Contractor have selected arbitration as the method of binding dispute resolution, the Owner as fiduciary shall make settlement with insurers or, in the case of a dispute over distribution of insurance proceeds, in accordance with the directions of the arbitrators.~~

§ 11.4 PERFORMANCE BOND AND PAYMENT BOND

§ 11.4.1 The Owner shall have the right to require the Contractor to furnish ~~bonds~~ separate Performance and Labor and Material Payment Bonds covering faithful performance of the Contract and payment of obligations arising thereunder each in the penal sum of 100% of the Contract Sum and in accordance with Applicable Laws as stipulated in bidding requirements or specifically required in the Contract Documents on the date of execution of the Contract.

§ 11.4.1.1 Bonds shall be executed by a responsible surety licensed in the state where the Work is located with a Best's rating of no less than A, XII or better and shall remain in effect for a period not less than one (1) year following the later of (1) the date of Substantial Completion or (2) the time required to resolve any items of incomplete Work and the payment of any disputed amounts.

§ 11.4.1.2 Bonds under this Section 11.4 must display the surety's bond number. A rider including substantially the following provisions shall be attached to each bond:

.1 Surety hereby agrees that it consents to and waives notice of any addition, alteration, omission, change, or other modification of the Contract Documents, the Subcontracts and the Sub-Subcontracts, any addition, alteration, change, extension of time, or other modification of the Contract Documents, the Subcontractors and the Sub-Subcontracts. Any addition, alteration, change, extension of time, or other modification of the Contract Documents, the Subcontracts or the Sub-Subcontracts, or a forbearance on the part of either the Owner, the Contractor or one or more Subcontractors to one or more of the other, shall not release the Surety of its obligations and notice to the surety of such matters is hereby waived.

.2 Surety agrees that it is obligated under the bonds to any successor, grantee or assignee of the Owner or the Contractor.

AIA Document A201® – 2007. Copyright © 1911, 1915, 1918, 1925, 1937, 1951, 1958, 1961, 1963, 1966, 1970, 1976, 1987, 1997 and 2007 by The American Institute of Architects. All rights reserved. The "American Institute of Architects," "AIA," the AIA Logo, "A201," and "AIA Contract Documents" are registered trademarks and may not be used without permission. This document was produced by AIA software at 09:39:13 ET on 09/22/2020 under Order No.8752807719 which expires on 09/14/2021, is not for resale, is licensed for one-time use only, and may only be used in accordance with the AIA Contract Documents® Terms of Service. To report copyright violations, e-mail copyright@aia.org.
User Notes: (1516648771)

§ 11.4.1.3 Each Subcontractor's surety shall also agree, in the form of a rider to each bond or via a separate agreement, that before it may seek exoneration, release or any kind of relief from its obligations under the bond as a result of any default by the Owner or the Contractor in the performance of any obligations to the Subcontractor under the Subcontract, the surety shall cause written notice of such default (specifying said default in detail) to be given to the Owner and the Contractor, and both of them shall have thirty (30) days from time after receipt of such notice within which to cure such default or cause it to be cured, or such additional reasonable period of time as may be required if the nature of such default is such that it cannot be cured immediately. Such Notice of Default shall be sent by certified or registered U.S. Mail, return receipt requested, first class postage prepaid, to the Owner and the Contractor.

§ 11.4.1.4 Each Subcontractor's Performance Bond and the Labor and Material Payment Bond shall each be "dual obligee" type bonds naming both the Owner and the Contractor as obligees.

§ 11.4.1.5 Each Subcontractor shall cause the attorney-in-fact who executes the required bonds on behalf of its surety to affix thereto a certified and current copy of his or her power of attorney indicating the monetary limit of such power.

§ 11.4.1.6 Upon the request of any person or entity appearing to be potential beneficiary of bonds covering payment of obligations arising under the Contract or any Subcontract, the Contractor shall promptly furnish a copy of the bonds or shall permit a copy to be made.

§ 11.4.1.7 The Contractor shall keep the sureties informed of the progress of the Work, and, without limiting the requirements of Section 11.4.1.2 (1) above, where necessary, obtain the sureties' consent to, or waiver of: (1) notice of changes in the work; (2) request for reduction or release of retainage; (3) request for Final Payment; and (4) any other material required by the surety. The Owner shall be notified by the Contractor, in writing, of all communications with the surety requesting or pertaining to consents or waivers. The Owner may, in the Owner's sole discretion, inform sureties of the progress of the Work and obtain consents as necessary to protect the Owner's rights, interest, privileges and benefits pursuant to any bond issued in connection with the Works.

§ 11.4.1.8 The Contractor may, in its discretion, determine other members of the Construction Team who will be required to supply bonds. All such bonds shall be (1) purchased solely at the expense of the Contractor (or the persons supplying them), without reimbursement under the Contract Sum or Guaranteed Maximum Price or otherwise, and (2) dual obligee bonds, naming the Owner as one of the Obligees.

§ 11.4.2 Upon the request of any person or entity appearing to be a potential beneficiary of bonds covering payment of obligations arising under the Contract, the Contractor shall promptly furnish a copy of the bonds or shall authorize a copy to be furnished.

ARTICLE 12 UNCOVERING AND CORRECTION OF WORK

§ 12.1 UNCOVERING OF WORK

§ 12.1.1 If a portion of the Work is covered contrary to the Architect's request or to requirements specifically expressed in the Contract Documents, it must, if requested in writing by the Architect, be uncovered for the Architect's examination and be replaced at the Contractor's sole cost and expense without change in the Contract Time.

§ 12.1.2 If a portion of the Work has been covered that the Architect has not specifically requested to examine prior to its being covered, the Architect may request with the Owner's written consent to see such Work and it shall be uncovered by the Contractor. If such Work is in accordance with the Contract Documents, costs of uncovering and replacement shall, by appropriate Change Order, be at the Owner's expense. If such Work is not in accordance with the Contract Documents, such costs and the cost of correction shall be at the Contractor's expense unless the condition was caused by the Owner or a separate contractor in which event the Owner shall be responsible for payment of such costs.

§ 12.2 CORRECTION OF WORK

§ 12.2.1 BEFORE OR AFTER SUBSTANTIAL COMPLETION

The Contractor shall promptly correct Work rejected by the Architect or failing to conform to the requirements of the Contract Documents, whether discovered before or after Substantial Completion and whether or not fabricated, installed or completed. Costs of correcting such rejected Work, including additional testing and inspections, the cost of

AIA Document A201® – 2007. Copyright © 1911, 1915, 1918, 1925, 1937, 1951, 1958, 1961, 1963, 1966, 1970, 1976, 1987, 1997 and 2007 by The American Institute of Architects. All rights reserved. The "American Institute of Architects," "AIA," the AIA Logo, "A201," and "AIA Contract Documents" are registered trademarks and may not be used without permission. This document was produced by AIA software at 09:39:13 ET on 09/22/2020 under Order No.8752807719 which expires on 09/14/2021, is not for resale, is licensed for one-time use only, and may only be used in accordance with the AIA Contract Documents® Terms of Service. To report copyright violations, e-mail copyright@aia.org.
User Notes: (1516648771)

uncovering and replacement, and compensation for the Architect's services and expenses made necessary thereby, shall be at the Contractor's sole cost and expense.

§ 12.2.2 AFTER SUBSTANTIAL COMPLETION

§ 12.2.2.1 In addition to the Contractor's obligations under Section 3.5, if, within one (1) year after the date of Substantial Completion of the Work or designated portion thereof or after the date for commencement of warranties established under Section 9.9.1, or by terms of an applicable special warranty required by the Contract Documents, any of the Work is found to be not in accordance with the requirements of the Contract Documents, the Contractor shall without interfering with Owner's operations, correct it promptly after receipt of written notice from the Owner to do so unless the Owner has previously given the Contractor a written acceptance of such condition. The Owner shall give such notice promptly after discovery of the condition. ~~During the one-year period for correction of Work, if the Owner fails to notify the Contractor and give the Contractor an opportunity to make the correction, the Owner waives the rights to require correction by the Contractor and to make a claim for breach of warranty.~~ If the Contractor fails to correct nonconforming Work within a reasonable time during that period ~~after receipt of notice from~~ the Owner ~~or Architect, the Owner~~ may correct it in accordance with Section 2.4. This obligation shall survive the termination of the Contract.

§ 12.2.2.2 The one-year period for correction of Work shall be extended with respect to portions of Work first performed after Substantial Completion by the period of time between Substantial Completion and the actual completion of that portion of the Work.

§ 12.2.2.3 The one-year period for correction of Work shall not be extended by corrective Work performed by the Contractor pursuant to this Section 12.2.

§ 12.2.3 The Contractor shall remove from the site portions of the Work that are not in accordance with the requirements of the Contract Documents and are neither corrected by the Contractor nor accepted by the Owner.

§ 12.2.4 The Contractor shall bear the cost of correcting destroyed or damaged construction, whether completed or partially completed, of the Owner or separate contractors caused by the Contractor's correction or removal of Work that is not in accordance with the requirements of the Contract Documents.

§ 12.2.5 Nothing contained in this Section 12.2 shall be construed to establish a period of limitation with respect to other obligations the Contractor has under the Contract Documents. Establishment of the one-year period for correction of Work as described in Section 12.2.2 relates only to the specific obligation of the Contractor to correct the Work, and has no relationship to the time within which the obligation to comply with the Contract Documents may be sought to be enforced, nor to the time within which proceedings may be commenced to establish the Contractor's liability with respect to the Contractor's obligations other than specifically to correct the Work.

§ 12.3 ACCEPTANCE OF NONCONFORMING WORK

If the Owner prefers to accept Work that is not in accordance with the requirements of the Contract Documents, the Owner may do so instead of requiring its removal and correction, in which case the Contract Sum or Guaranteed Maximum Price will be reduced as appropriate and equitable. Such adjustment shall be effected whether or not final payment has been made.

§ 12.4 OWNER'S RIGHT TO CORRECT OR REMOVE DEFECTIVE WORK

§ 12.4.1 If the Contractor fails to cause defective Work to be corrected within a reasonable time after receipt of notice from the Owner, the Owner may correct it and the Contractor shall pay the Owner all costs of correction (including the value of the Owner's staff time) upon demand. Alternatively, in the event of such failure, the Owner may (without being deemed a bailee) remove it and store the salvable materials or equipment at the Contractor's expense. If the Contractor does not pay costs of such removal and storage within ten (10) days after written notice, the Owner may upon ten (10) additional days' written notice sell such materials and equipment at auction or at private sale and shall account for the proceeds thereof, after deducting from the sale proceeds all costs, expenses and damages that should have been borne by the Contractor (including the value of the Owner's staff time and reasonable attorneys' fees). If the proceeds of sale do not cover costs which the Contractor should have borne, the Contract Sum or Guaranteed Maximum Price shall be reduced by the deficiency, plus interest. If payments then or thereafter due the Contractor are

AIA Document A201® – 2007. Copyright © 1911, 1915, 1918, 1925, 1937, 1951, 1958, 1961, 1963, 1966, 1970, 1976, 1987, 1997 and 2007 by The American Institute of Architects. All rights reserved. The "American Institute of Architects," "AIA," the AIA Logo, "A201," and "AIA Contract Documents" are registered trademarks and may not be used without permission. This document was produced by AIA software at 09:39:13 ET on 09/22/2020 under Order No.8752807719 which expires on 09/14/2021, is not for resale, is licensed for one-time use only, and may only be used in accordance with the AIA Contract Documents® Terms of Service. To report copyright violations, e-mail copyright@aia.org.
User Notes: (1516648771)

not sufficient to cover the amount owed, the Contractor shall pay the difference to the Owner immediately upon demand.

§ 12.4.2 The Owner's right to store and sell such defective Work shall not give rise to a duty to do so. Instead, the Owner may upon ten (10) day's prior written notice simply dispose of such defective Work as it sees fit. All costs of disposal shall be borne by the Contractor, without recovery from the Owner, under the Contract Sum or Guaranteed Maximum Price, any contingency or otherwise.

§ 12.4.3 Tests. If tests or inspections reveal that portions of the Work are Defective, any additional tests or inspections required to assure the Architect and the Owner that the defective Work has been remedied or is in an acceptable condition shall be conducted at the expense of the Contractor, without increase in the Contract Sum, and without use of any contingency. The Contractor shall pay all additional costs of the Architect and the Owner, which are associated with such additional tests or inspections.

§ 12.4.4 Periods of Limitation. Nothing contained in this Article 12 shall be construed to establish a period of limitation with respect to other obligations, which the Contractor might have under the Contract Documents or Applicable Laws. Establishment of the Correction Period relates only to the specific obligation of the Contractor to correct the Work under this Article 12 and has no relationship to the time within which the obligation to comply with the Contract may be sought to be enforced by the Owner, nor to the time within which proceedings may be commenced to establish the Contractor's liability with respect to its obligations under the Contract.

§ 12.4.5 The Owner's Right to Stop the Work. If the Contractor fails to correct Work, which is not in accordance with the requirements of the Contract Documents as required by Section 12.2.2 or fails to carry out the Work in accordance with the Contract Documents, the Owner may, by written order, direct the Contractor to stop the Work, or any portion thereof, until the cause for such order has been eliminated; however, the right of the Owner to stop the Work shall not give rise to a duty on the part of the Owner to exercise this right for the benefit of the Contractor or any other person or entity.

§12.5 DAMAGE

§ 12.5.1 If prior to the date of Final Completion any member of the Construction Team uses or damages any portion of the Work or other property, including, without limitation, mechanical, electrical, plumbing and other building systems, machinery, equipment or other mechanical device, the Contractor shall cause such item to be restored to "like new" condition at no expense to the Owner, without recovery from the Owner, under the Contract Sum or Guaranteed Maximum Price, any contingency or otherwise, unless such damage is caused by the Owner or Architect.

§ 12.5.2 The Contractor shall bear the cost of correcting destroyed or damaged construction or other property, whether completed or partially completed, of the Owner or separate contractors caused by the Contractor's correction or removal of Work which is not in accordance with the requirements of the Contract Documents.

§ 12.5.3 Nothing in this Section 12.5 either limits the parties' rights to obtain recovery from any applicable property insurance or entitles the insurer to pursue a subrogation claim.

ARTICLE 13 MISCELLANEOUS PROVISIONS

§ 13.1 GOVERNING LAW

The Contract shall be governed by the law of the place where the Project is ~~located except that, if the parties have selected arbitration as the method of binding dispute resolution, the Federal Arbitration Act shall govern Section 15.4.~~ located.

§ 13.2 SUCCESSORS AND ASSIGNS

§ 13.2.1 The Owner and Contractor respectively bind themselves, their partners, successors, assigns and legal representatives to covenants, agreements and obligations contained in the Contract Documents. Except as provided in Section 13.2.2, neither party to the Contract shall assign the Contract as a whole or in part without written consent of the other. If either party attempts to make such an assignment without such consent, that party shall nevertheless remain legally responsible for all obligations under the Contract.

AIA Document A201® – 2007. Copyright © 1911, 1915, 1918, 1925, 1937, 1951, 1958, 1961, 1963, 1966, 1970, 1976, 1987, 1997 and 2007 by The American Institute of Architects. All rights reserved. The "American Institute of Architects," "AIA," the AIA Logo, "A201," and "AIA Contract Documents" are registered trademarks and may not be used without permission. This document was produced by AIA software at 09:39:13 ET on 09/22/2020 under Order No.8752807719 which expires on 09/14/2021, is not for resale, is licensed for one-time use only, and may only be used in accordance with the AIA Contract Documents® Terms of Service. To report copyright violations, e-mail copyright@aia.org.
User Notes: (1516648771)

§ 13.2.2 The Owner may, without consent of the Contractor, assign the Contract to a ~~lender providing construction financing for the Project, if the lender assumes the Owner's rights and obligations under the Contract Documents.~~ third party. The Contractor shall execute all consents reasonably required to facilitate such assignment.

§ 13.3 WRITTEN NOTICE

Written notice shall be deemed to have been duly served if delivered in person to the individual, to a member of the firm or entity, or to an officer of the corporation for which it was intended; or if delivered at, or sent by registered or certified mail or by national overnight courier service providing a tracking system and proof of delivery to, the last business address known to the party giving notice.

§ 13.4 RIGHTS AND REMEDIES

§ 13.4.1 Duties and obligations imposed by the Contract Documents and rights and remedies available thereunder shall be in addition to and not a limitation of duties, obligations, rights and remedies otherwise imposed or available by law.

§ 13.4.2 No action or failure to act by the Owner, Architect or Contractor shall constitute a waiver of a right or duty afforded them under the Contract, nor shall such action or failure to act constitute approval of or acquiescence in a breach there under, except as may be specifically agreed in writing.

§ 13.5 TESTS AND INSPECTIONS

§ 13.5.1 Tests, inspections and approvals of portions of the Work shall be made as required by the Contract Documents and by ~~applicable laws, statutes, ordinances, codes, rules and regulations or lawful orders of public authorities.~~ Applicable Laws. Unless otherwise provided, the Contractor shall make arrangements for such tests, inspections and approvals with an independent testing laboratory or entity acceptable to the Owner, or with the appropriate public authority, and shall bear all related costs of tests, inspections and approvals. The Contractor shall give the Architect timely notice of when and where tests and inspections are to be made so that the Architect may be present for such procedures. The Owner shall bear costs of (1) tests, inspections or approvals that do not become requirements until after bids are received or negotiations concluded, and (2) tests, inspections or approvals where building codes or applicable laws or regulations prohibit the Owner from delegating their cost to the Contractor.

§ 13.5.2 If the Architect, Owner or public authorities having jurisdiction determine that portions of the Work require additional testing, inspection or approval not included under Section 13.5.1, the Architect will, upon written authorization from the Owner, instruct the Contractor to make arrangements for such additional testing, inspection or approval by an entity acceptable to the Owner, and the Contractor shall give timely notice to the Architect of when and where tests and inspections are to be made so that the Architect may be present for such procedures. Such costs, except as provided in Section 13.5.3, shall be at the Owner's expense.

§ 13.5.3 If such procedures for testing, inspection or approval under Sections 13.5.1 and 13.5.2 reveal failure of the portions of the Work to comply with requirements established by the Contract Documents, all costs made necessary by such failure including those of repeated procedures and compensation for the Architect's services and expenses shall be at the Contractor's ~~expense.~~ expense without increase in the Contract Sum or Guaranteed Maximum Price, and without use of any contingency.

§ 13.5.4 Required certificates of testing, inspection or approval shall, unless otherwise required by the Contract Documents, be secured by the Contractor and promptly delivered to the Architect.

§ 13.5.5 If the Architect is to observe tests, inspections or approvals required by the Contract Documents, the Architect will do so promptly and, where practicable, at the normal place of testing.

§ 13.5.6 Tests or inspections conducted pursuant to the Contract Documents shall be made promptly to avoid unreasonable delay in the Work.

§ 13.6 INTEREST

Payments due and unpaid under the Contract Documents shall bear interest from the date payment is due at such rate as the parties may agree upon in writing or, in the absence thereof, at the legal rate prevailing from time to time at the place where the Project is located.

AIA Document A201® – 2007. Copyright © 1911, 1915, 1918, 1925, 1937, 1951, 1958, 1961, 1963, 1966, 1970, 1976, 1987, 1997 and 2007 by The American Institute of Architects. All rights reserved. The "American Institute of Architects," "AIA," the AIA Logo, "A201," and "AIA Contract Documents" are registered trademarks and may not be used without permission. This document was produced by AIA software at 09:39:13 ET on 09/22/2020 under Order No.8752807719 which expires on 09/14/2021, is not for resale, is licensed for one-time use only, and may only be used in accordance with the AIA Contract Documents® Terms of Service. To report copyright violations, e-mail copyright@aia.org.
User Notes: (1516648771)

§ 13.7 TIME LIMITS ON CLAIMS

The Owner and Contractor shall commence all claims and causes of action, in accordance with Michigan law, regardless of time frames identified herein, whether in contract, tort, breach of warranty or otherwise, against the other arising out of or related to the Contract in accordance with the requirements of the final dispute resolution method selected in the ~~Agreement~~ Contract within the time period specified by ~~applicable law,~~ Applicable Law, but in any case not more than 10 years after the date of Substantial Completion of the Work. The Owner and Contractor waive all claims and causes of action not commenced in accordance with this Section 13.7.

§ 13.7.1 Regardless of any provisions to the contrary, the statute of limitations with respect to any defective or nonconforming Work which is not discovered by the Owner shall not commence until the discovery of such defective or nonconforming Work by the Owner.

§ 13.8 SURETY NOTICE AND PRIOR APPROVAL

Except where otherwise expressly required by the terms of the Contract, the Contract Documents or the General Conditions, exercise by the Owner of any contractual or legal right or remedy without prior notice to or approval by the Contractor's surety shall in no way bar or prohibit the Owner's ability to pursue such right or remedy. Further, pursuit of such a right or remedy without prior notice to or approval of surety shall in no way compromise, limit or bar any claim by the Owner against a surety bond of the Contractor.

ARTICLE 14 TERMINATION OR SUSPENSION OF THE CONTRACT

§ 14.1 TERMINATION BY THE CONTRACTOR

§ 14.1.1 The Contractor may terminate the Contract if the Work is stopped for a period of 30 consecutive days through no act or fault of the Contractor or a Subcontractor, Sub-subcontractor or their agents or employees or any other persons or entities performing portions of the Work under direct or indirect contract with the Contractor, for any of the following reasons:

.1 Issuance of an order of a court or other public authority having jurisdiction that requires all Work to be stopped; or

.2 An act of government, such as a declaration of national emergency that requires all Work to be ~~stopped;~~

~~**.3** Because the Architect has not issued a Certificate for Payment and has not notified the Contractor of the reason for withholding certification as provided in Section 9.4.1, or because the Owner has not made payment on a Certificate for Payment within the time stated in the Contract Documents; or~~

~~**.4** The Owner has failed to furnish to the Contractor promptly, upon the Contractor's request, reasonable evidence as required by Section 2.2.1.~~stopped.

§ 14.1.2 The Contractor may terminate the Contract if, through no act or fault of the Contractor or a Subcontractor, Sub-subcontractor or their agents or employees or any other persons or entities performing portions of the Work under direct or indirect contract with the Contractor, repeated suspensions, delays or interruptions of the entire Work by the Owner as described in Section 14.3 constitute in the aggregate more than 100 percent of the total number of days scheduled for completion, or 120 days in any 365-day period, whichever is less.

§ 14.1.3 If one of the reasons described in Section 14.1.1 or 14.1.2 exists, the Contractor may, upon seven days' written notice to the Owner and Architect, terminate the Contract and recover from the Owner payment for Work ~~executed, including reasonable overhead and profit, costs incurred by reason of such termination, and damages.~~ executed.

§ 14.1.4 ~~If the Work is stopped for a period of 60 consecutive days through no act or fault of the Contractor or a Subcontractor or their agents or employees or any other persons performing portions of the Work under contract with the Contractor because the Owner has repeatedly failed to fulfill the Owner's obligations under the Contract Documents with respect to matters important to the progress of the Work, the Contractor may, upon seven additional days' written notice to the Owner and the Architect, terminate the Contract and recover from the Owner as provided in Section 14.1.3.~~The Contractor acknowledges that it has certified to the Owner that no owner, employee, agent, representative, contractor, Subcontractor, Sub-subcontractors and/or other personnel of the Contractor will be on any School District premises if they are a registered criminal sexual offender under the Sex Offenders Registration Act, Public Act 295 of 1994, or have been convicted of "Listed Offense" as defined under Section 722 of the Sex Offenders Registration Act, MCL 28.722 (the "Certification"). The Contractor acknowledges and agrees that if it is found to have submitted a false Certification or otherwise breaches or fails to comply with the requirements of the Certification, the Owner may immediately terminate the Contract and notwithstanding any other provision of this Contract, the

AIA Document A201® – 2007. Copyright © 1911, 1915, 1918, 1925, 1937, 1951, 1958, 1961, 1963, 1966, 1970, 1976, 1987, 1997 and 2007 by The American Institute of Architects. All rights reserved. The "American Institute of Architects," "AIA," the AIA Logo, "A201," and "AIA Contract Documents" are registered trademarks and may not be used without permission. This document was produced by AIA software at 09:39:13 ET on 09/22/2020 under Order No.8752807719 which expires on 09/14/2021, is not for resale, is licensed for one-time use only, and may only be used in accordance with the AIA Contract Documents® Terms of Service. To report copyright violations, e-mail copyright@aia.org.
User Notes: (1516648771)

Contractor shall be liable to the Owner for any and all costs and expenses incurred by the Owner to secure a replacement contractor to complete the Work in accordance with the Contract Documents, including, but not limited to, any costs or expenses required to be paid by the Owner to the replacement contractor in addition to those required to be paid to the Contractor, all attorney and/or professional service fees, and any and all other actual and consequential damages incurred by the Owner.

§ 14.2 TERMINATION BY THE OWNER FOR CAUSE

§ 14.2.1 The Owner may terminate the Contract if the Contractor

- **.1** ~~repeatedly~~ refuses or fails to supply enough properly skilled workers or proper materials;
- **.2** fails to make payment to Subcontractors for materials or labor in accordance with the respective agreements between the Contractor and the Subcontractors;
- **.3** ~~repeatedly disregards applicable laws,~~ disregards Applicable Laws, statutes, ordinances, codes, rules and regulations, or lawful orders of a public authority; ~~or~~
- **.4** otherwise is guilty of substantial breach of a provision of the Contract ~~Documents.~~Documents; or
- **.5** the Contractor fails to prosecute the Work or any part thereof with promptness and diligence or fails to perform any provisions of this Contract, or goes into bankruptcy, liquidation, makes an assignment for the benefit of creditors, enters into a composition with its creditors, or becomes insolvent.

§ 14.2.2 When any of the above reasons exist, the ~~Owner, upon certification by the Initial Decision Maker that sufficient cause exists to justify such action,~~ Owner may without prejudice to any other rights or remedies of the Owner and after giving the Contractor and the Contractor's surety, if any, seven days' written notice, terminate ~~employment of~~ the Contractor and may, subject to any prior rights of the surety:

- **.1** Exclude the Contractor from the site and take possession of all materials, equipment, tools, and construction equipment and machinery thereon owned by the Contractor;
- **.2** Accept assignment of subcontracts pursuant to Section 5.4; and
- **.3** Finish the Work by whatever reasonable method the Owner may deem expedient. Upon written request of the Contractor, the Owner shall furnish to the Contractor a detailed accounting of the costs incurred by the Owner in finishing the Work.

In the event the Contractor's surety bond requires notice of intent to declare a default of the Contractor and if such bond notice is provided by the Owner, such notice shall be adequate to satisfy the three (3) day written notice described above in this section.

§ 14.2.3 When the Owner terminates the Contract for one of the reasons stated in Section 14.2.1, the Contractor shall not be entitled to receive further payment until ~~the Work is finished.~~final completion of the Work is finished and determination of the sums due pursuant to Section 14.2.4 below.

§ 14.2.4 If the unpaid balance of the Contract Sum ~~exceeds costs of finishing the Work, including compensation for the Architect's services and expenses made necessary thereby, and other damages incurred by the Owner and not expressly waived, such excess shall be paid to the Contractor. If such costs and damages exceed the~~ or Guaranteed Maximum Price exceeds all costs to the Owner of completing the Work, including increased costs resulting from Contractor's default for the Owner's staff time, then the Contractor shall be paid for all Work performed by the Contractor to the date of termination, but in no case shall the amount paid to the Contractor cause the Contract Sum or Guaranteed Maximum Price to be exceeded. If the costs to the Owner of completing the Work exceed such unpaid balance, the Contractor shall pay the ~~difference to the Owner. The amount to be paid to the Contractor or Owner, as the case may be, shall be certified by the Initial Decision Maker, upon application, and this obligation for payment shall survive termination of the Contract.~~difference, plus interest, to the Owner within thirty (30) days after the Owner's demand. The costs to the Owner of completing the Work shall include (but only to the extent caused or exacerbated by the Contractor's default) the cost of any additional architectural, legal, managerial, and administrative services required, any costs incurred in retaining another Contractor or other Subcontractors, any additional interest or fees which Owner incurs or must pay by reason of a delay in completion of the Work, attorneys' fees and expenses, and any other damages, costs, and expenses Owner may incur by reason of completing the Work.

§ 14.2.5 If the Owner erroneously or improperly terminates the Contractor for cause, then the Owner's action shall be deemed to be a termination for convenience, subject to the provisions of Section 14.4.

AIA Document A201® – 2007. Copyright © 1911, 1915, 1918, 1925, 1937, 1951, 1958, 1961, 1963, 1966, 1970, 1976, 1987, 1997 and 2007 by The American Institute of Architects. All rights reserved. The "American Institute of Architects," "AIA," the AIA Logo, "A201," and "AIA Contract Documents" are registered trademarks and may not be used without permission. This document was produced by AIA software at 09:39:13 ET on 09/22/2020 under Order No.8752807719 which expires on 09/14/2021, is not for resale, is licensed for one-time use only, and may only be used in accordance with the AIA Contract Documents® Terms of Service. To report copyright violations, e-mail copyright@aia.org.
User Notes: (1516648771)

§ 14.3 SUSPENSION BY THE OWNER FOR CONVENIENCE

§ 14.3.1 The Owner may, without cause, order the Contractor in writing to suspend, delay or interrupt the Work in whole or in part for such period of time as the Owner may determine.

§ 14.3.2 The Contract Sum or Guaranteed Maximum Price and Contract Time ~~shall~~ may be adjusted for increases in the cost and time caused by suspension, delay or interruption as described in Section 14.3.1. ~~Adjustment of the Contract Sum shall include profit.~~ No adjustment shall be made to the extent

- **.1** that performance is, was or would have been so suspended, delayed or interrupted by another cause for which the Contractor is responsible; or
- **.2** that an equitable adjustment is made or denied under another provision of the Contract.

§ 14.4 TERMINATION BY THE OWNER FOR CONVENIENCE

§ 14.4.1 The Owner may, at any time, terminate the ~~Contract~~ Contract, in whole or in part, for the Owner's convenience and without cause. Termination by the Owner under this Section shall be by a notice of termination delivered to the Contractor specifying the extent of termination and the effective date.

§ 14.4.2 Upon receipt of written notice from the Owner of such termination for the Owner's convenience, the Contractor shall

- **.1** cease operations as directed by the Owner in the ~~notice;~~notice and deliver to the Owner the originals or legible copies of all Drawings, Specifications, reports and other data, records and materials in the Construction Manager's custody and control pertaining to the portion of the Work for which the employment of the Contractor was terminated;
- **.2** take actions necessary, or that the Owner may direct, for the protection and preservation of the Work; and
- **.3** except for Work directed to be performed prior to the effective date of termination stated in the notice, terminate all existing subcontracts and purchase orders and enter into no further subcontracts and purchase orders.

§ 14.4.3 In case of such termination for the Owner's convenience, the Contractor shall be entitled to receive payment for Work ~~executed, and costs incurred by reason of such termination, along with reasonable overhead and profit on the Work not executed.~~executed as of the date of termination by the Owner and subject to negotiation by both parties.

ARTICLE 15 CLAIMS AND DISPUTES

§ 15.1 CLAIMS

§ 15.1.1 DEFINITION

A Claim is a demand or assertion by one of the parties seeking, as a matter of right, payment of money, or other relief with respect to the terms of the ~~Contract.~~ Contract, including but not limited to, additional sums, additional time for performance, or damages for delay. The term "Claim" also includes other disputes and matters in question between the Owner and Contractor arising out of or relating to the Contract. The responsibility to substantiate Claims shall rest with the party making the Claim.

§ 15.1.2 NOTICE OF CLAIMS

Claims by either the Owner or Contractor must be initiated by written notice to the other party and to the ~~Initial Decision Maker with a copy sent to the Architect, if the Architect is not serving as the Initial Decision Maker.~~ Architect. Claims by either party must be initiated within 21 days after occurrence of the event giving rise to such Claim or within 21 days after the claimant first recognizes the condition giving rise to the Claim, whichever is later.

§ 15.1.3 CONTINUING CONTRACT PERFORMANCE

Pending final resolution of a Claim, except as otherwise agreed in writing or as provided in Section 9.7 and Article 14, the Contractor shall proceed diligently with performance of the Contract and the Owner shall continue to make payments in accordance with the Contract Documents. The Architect will prepare Change Orders and issue Certificates for Payment in accordance with the decisions of the ~~Initial Decision Maker.~~ Architect.

§ 15.1.4 CLAIMS FOR ADDITIONAL COST

If the Contractor wishes to make a Claim for an increase in the Contract Sum, written notice as provided herein shall be given before proceeding to execute the Work. Failure to provide such notice shall serve as an absolute bar against a

AIA Document A201® – 2007. Copyright © 1911, 1915, 1918, 1925, 1937, 1951, 1958, 1961, 1963, 1966, 1970, 1976, 1987, 1997 and 2007 by The American Institute of Architects. All rights reserved. The "American Institute of Architects," "AIA," the AIA Logo, "A201," and "AIA Contract Documents" are registered trademarks and may not be used without permission. This document was produced by AIA software at 09:39:13 ET on 09/22/2020 under Order No.8752807719 which expires on 09/14/2021, is not for resale, is licensed for one-time use only, and may only be used in accordance with the AIA Contract Documents® Terms of Service. To report copyright violations, e-mail copyright@aia.org.
User Notes: (1516648771)

claim for such an increase in the Contract Sum. Prior notice is not required for Claims relating to an emergency endangering life or property arising under Section 10.4.

§ 15.1.5 CLAIMS FOR ADDITIONAL TIME

§ 15.1.5.1 If the Contractor wishes to make a Claim for an increase in the Contract Time, written notice as provided herein shall be given. The Contractor's Claim shall include an estimate of cost and of probable effect of delay on progress of the Work. In the case of a continuing delay, only one Claim is necessary.

§ 15.1.5.2 If adverse weather conditions are the basis for a Claim for additional time, such Claim shall be documented by data substantiating that weather conditions were abnormal for the period of time, could not have been reasonably anticipated and had an adverse effect on the scheduled construction.

§ 15.1.6 CLAIMS FOR CONSEQUENTIAL DAMAGES

The Contractor and Owner waive Claims against each other for consequential damages arising out of or relating to this Contract. This mutual waiver includes

.1 damages incurred by the Owner for rental expenses, for losses of use, income, profit, financing, business and reputation, and for loss of management or employee productivity or of the services of such persons; and

.2 damages incurred by the Contractor for principal office expenses including the compensation of personnel stationed there, for losses of financing, business and reputation, and for loss of profit except anticipated profit arising directly from the Work.

This mutual waiver is applicable, without limitation, to all consequential damages due to either party's termination in accordance with Article 14. Nothing contained in this Section 15.1.6 shall be deemed to preclude an award of liquidated damages, when applicable, in accordance with the requirements of the Contract Documents.

§ 15.2 INITIAL DECISION

§ 15.2.1 Claims, ~~excluding those arising under Sections 10.3, 10.4, 11.3.9, and 11.3.10, shall be referred to the Initial Decision Maker for~~ shall be referred to the Architectfor initial decision. The Architect will serve as the Initial Decision Maker, unless otherwise indicated in the ~~Agreement.~~ Contract. Except for those Claims excluded by this Section 15.2.1, an initial decision shall be required as a condition precedent to ~~mediation~~ litigation or any other mutually agreed upon dispute resolution forum of any Claim arising prior to the date final payment is due, unless 30 days have passed after the Claim has been referred to the Initial Decision Maker with no decision having been rendered. Unless the Initial Decision Maker and all affected parties agree, the Initial Decision Maker will not decide disputes between the Contractor and persons or entities other than the Owner.

§ 15.2.2 The Initial Decision Maker will review Claims and within ten days of the receipt of a Claim take one or more of the following actions: (1) request additional supporting data from the claimant or a response with supporting data from the other party, (2) reject the Claim in whole or in part, (3) approve the Claim, (4) suggest a compromise, or (5) advise the parties that the Initial Decision Maker is unable to resolve the Claim if the Initial Decision Maker lacks sufficient information to evaluate the merits of the Claim or if the Initial Decision Maker concludes that, in the Initial Decision Maker's sole discretion, it would be inappropriate for the Initial Decision Maker to resolve the Claim.

§ 15.2.3 In evaluating Claims, the Initial Decision Maker may, but shall not be obligated to, consult with or seek information from either party or from persons with special knowledge or expertise who may assist the Initial Decision Maker in rendering a decision. The Initial Decision Maker may request the Owner to authorize retention of such persons at the Owner's expense.

§ 15.2.4 If the Initial Decision Maker requests a party to provide a response to a Claim or to furnish additional supporting data, such party shall respond, within ten days after receipt of such request, and shall either (1) provide a response on the requested supporting data, (2) advise the Initial Decision Maker when the response or supporting data will be furnished or (3) advise the Initial Decision Maker that no supporting data will be furnished. Upon receipt of the response or supporting data, if any, the Initial Decision Maker will either reject or approve the Claim in whole or in part.

§ 15.2.5 The Initial Decision Maker will render an initial decision approving or rejecting the Claim, or indicating that the Initial Decision Maker is unable to resolve the Claim. This initial decision shall (1) be in writing; (2) state the

AIA Document A201® – 2007. Copyright © 1911, 1915, 1918, 1925, 1937, 1951, 1958, 1961, 1963, 1966, 1970, 1976, 1987, 1997 and 2007 by The American Institute of Architects. All rights reserved. The "American Institute of Architects," "AIA," the AIA Logo, "A201," and "AIA Contract Documents" are registered trademarks and may not be used without permission. This document was produced by AIA software at 09:39:13 ET on 09/22/2020 under Order No.8752807719 which expires on 09/14/2021, is not for resale, is licensed for one-time use only, and may only be used in accordance with the AIA Contract Documents® Terms of Service. To report copyright violations, e-mail copyright@aia.org.
User Notes: (1516648771)

reasons therefor; and (3) notify the parties ~~and the Architect, if the Architect is not serving as the Initial Decision Maker,~~ of any change in the Contract Sum or Contract Time or both. ~~The initial decision shall be final and binding on the parties but subject to mediation and, if the parties fail to resolve their dispute through mediation, to binding dispute resolution.~~

§ 15.2.6 ~~Either party may file for mediation of an initial decision at any time, subject to the terms of Section 15.2.6.1.~~In the event of a Claim against the Contractor, the Owner may, but is not obligated to, notify the surety, if any, of the nature and amount of the Claim. If the Claim relates to a possibility of a Contractor's default, the Owner may, but is not obligated to, notify the surety and request the surety's assistance in resolving the controversy.

~~**§ 15.2.6.1** Either party may, within 30 days from the date of an initial decision, demand in writing that the other party file for mediation within 60 days of the initial decision. If such a demand is made and the party receiving the demand fails to file for mediation within the time required, then both parties waive their rights to mediate or pursue binding dispute resolution proceedings with respect to the initial decision.~~

~~**§ 15.2.7** In the event of a Claim against the Contractor, the Owner may, but is not obligated to, notify the surety, if any, of the nature and amount of the Claim. If the Claim relates to a possibility of a Contractor's default, the Owner may, but is not obligated to, notify the surety and request the surety's assistance in resolving the controversy.~~

~~**§ 15.2.8** If a Claim relates to or is the subject of a mechanic's lien, the party asserting such Claim may proceed in accordance with applicable law to comply with the lien notice or filing deadlines.~~

~~**§ 15.3 MEDIATION**~~

~~**§ 15.3.1** Claims, disputes, or other matters in controversy arising out of or related to the Contract except those waived as provided for in Sections 9.10.4, 9.10.5, and 15.1.6 shall be subject to mediation as a condition precedent to binding dispute resolution.~~

~~**§ 15.3.2** The parties shall endeavor to resolve their Claims by mediation which, unless the parties mutually agree otherwise, shall be administered by the American Arbitration Association in accordance with its Construction Industry Mediation Procedures in effect on the date of the Agreement. A request for mediation shall be made in writing, delivered to the other party to the Contract, and filed with the person or entity administering the mediation. The request may be made concurrently with the filing of binding dispute resolution proceedings but, in such event, mediation shall proceed in advance of binding dispute resolution proceedings, which shall be stayed pending mediation for a period of 60 days from the date of filing, unless stayed for a longer period by agreement of the parties or court order. If an arbitration is stayed pursuant to this Section 15.3.2, the parties may nonetheless proceed to the selection of the arbitrator(s) and agree upon a schedule for later proceedings.~~

~~**§ 15.3.3** The parties shall share the mediator's fee and any filing fees equally. The mediation shall be held in the place where the Project is located, unless another location is mutually agreed upon. Agreements reached in mediation shall be enforceable as settlement agreements in any court having jurisdiction thereof.~~

~~**§ 15.4 ARBITRATION**~~

~~**§ 15.4.1** If the parties have selected arbitration as the method for binding dispute resolution in the Agreement, any Claim subject to, but not resolved by, mediation shall be subject to arbitration which, unless the parties mutually agree otherwise, shall be administered by the American Arbitration Association in accordance with its Construction Industry Arbitration Rules in effect on the date of the Agreement. A demand for arbitration shall be made in writing, delivered to the other party to the Contract, and filed with the person or entity administering the arbitration. The party filing a notice of demand for arbitration must assert in the demand all Claims then known to that party on which arbitration is permitted to be demanded.~~

~~**§ 15.4.1.1** A demand for arbitration shall be made no earlier than concurrently with the filing of a request for mediation, but in no event shall it be made after the date when the institution of legal or equitable proceedings based on the Claim would be barred by the applicable statute of limitations. For statute of limitations purposes, receipt of a~~

AIA Document A201® – 2007. Copyright © 1911, 1915, 1918, 1925, 1937, 1951, 1958, 1961, 1963, 1966, 1970, 1976, 1987, 1997 and 2007 by The American Institute of Architects. All rights reserved. The "American Institute of Architects," "AIA," the AIA Logo, "A201," and "AIA Contract Documents" are registered trademarks and may not be used without permission. This document was produced by AIA software at 09:39:13 ET on 09/22/2020 under Order No.8752807719 which expires on 09/14/2021, is not for resale, is licensed for one-time use only, and may only be used in accordance with the AIA Contract Documents® Terms of Service. To report copyright violations, e-mail copyright@aia.org.
User Notes: (1516648771)

~~written demand for arbitration by the person or entity administering the arbitration shall constitute the institution of legal or equitable proceedings based on the Claim.~~

~~**§ 15.4.2** The award rendered by the arbitrator or arbitrators shall be final, and judgment may be entered upon it in accordance with applicable law in any court having jurisdiction thereof.~~

~~**§ 15.4.3** The foregoing agreement to arbitrate and other agreements to arbitrate with an additional person or entity duly consented to by parties to the Agreement shall be specifically enforceable under applicable law in any court having jurisdiction thereof.~~

~~**§ 15.4.4 CONSOLIDATION OR JOINDER**~~
~~**§ 15.4.4.1** Either party, at its sole discretion, may consolidate an arbitration conducted under this Agreement with any other arbitration to which it is a party provided that (1) the arbitration agreement governing the other arbitration permits consolidation, (2) the arbitrations to be consolidated substantially involve common questions of law or fact, and (3) the arbitrations employ materially similar procedural rules and methods for selecting arbitrator(s).~~

~~**§ 15.4.4.2** Either party, at its sole discretion, may include by joinder persons or entities substantially involved in a common question of law or fact whose presence is required if complete relief is to be accorded in arbitration, provided that the party sought to be joined consents in writing to such joinder. Consent to arbitration involving an additional person or entity shall not constitute consent to arbitration of any claim, dispute or other matter in question not described in the written consent.~~

~~**§ 15.4.4.3** The Owner and Contractor grant to any person or entity made a party to an arbitration conducted under this Section 15.4, whether by joinder or consolidation, the same rights of joinder and consolidation as the Owner and Contractor under this Agreement.~~

AIA Document A201® – 2007. Copyright © 1911, 1915, 1918, 1925, 1937, 1951, 1958, 1961, 1963, 1966, 1970, 1976, 1987, 1997 and 2007 by The American Institute of Architects. All rights reserved. The "American Institute of Architects," "AIA," the AIA Logo, "A201," and "AIA Contract Documents" are registered trademarks and may not be used without permission. This document was produced by AIA software at 09:39:13 ET on 09/22/2020 under Order No.8752807719 which expires on 09/14/2021, is not for resale, is licensed for one-time use only, and may only be used in accordance with the AIA Contract Documents® Terms of Service. To report copyright violations, e-mail copyright@aia.org.
User Notes: (1516648771)

SECTION 01 10 00

SUMMARY

PART 1 GENERAL

1.1 SECTION INCLUDES

A. Contract description.

B. Work by Owner.

C. Owner supplied products.

D. Contractor's use of site and premises.

E. Specification Conventions.

1.2 CONTRACT DESCRIPTION

A. Work of the Project includes installation of a new packaged generator set, automatic transfer switch, and associated work as depicted:

B. Perform Work of each Bid Category under stipulated sum contract with Construction Manager in accordance with Conditions of Contract.

C. Work of each subcontract is described in each respective Bid Category.

1.3 WORK BY OWNER

A. Items noted NIC (Not in Contract), movable cabinets, and furnishings will be furnished and installed by Owner after Substantial Completion.

B. Asbestos identification and abatement will be completed by the Owner’s independent Contractor prior to the commencement of Work under this contract.

1.4 OWNER SUPPLIED PRODUCTS

A. The Packaged Generator Set and Automatic Transfer Switch have been pre-purchased by the Owner for installation by the Contractor. Refer to Section 00 31 00 – Available Project Information for relevant documentation.

1.5 CONTRACTOR'S USE OF SITE AND PREMISES

A. Limit use of site and premises to allow:
   1. Owner occupancy.
   2. Work by Others and Work by Owner.
   3. Use of site and premises by the public.

B. Vehicular access to the site is limited to existing paved or gravel drives and parking areas. Vehicular access with not be permitted across lawns or concrete sidewalks or other site

improvements except where required to access the work area upon approval of the Construction Manager.

C. Coordinate site and building access routes with Owner.

1.6 SPECIFICATION CONVENTIONS

A. These specifications are written in imperative mood and streamlined form. This imperative language is directed to the Contractor, unless specifically noted otherwise. The words “shall be” are included by inference where a colon (:) is used within sentences or phrases.

B. Contractor is responsible for the entire Work identified in the Contract Documents without regard to the specific location of the information within the Contract Documents.

PART 2 PRODUCTS - Not Used

PART 3 EXECUTION - Not Used

END OF SECTION

SECTION 01 20 00

PRICE AND PAYMENT PROCEDURES

PART 1 GENERAL

1.1 SECTION INCLUDES

A. Cash allowances.

B. Contingency allowances.

C. Schedule of values.

D. Applications for payment.

E. Change procedures.

F. Defect assessment.

G. Unit Prices.

H. Alternates.

1.2 CASH ALLOWANCES

A. Include material and/or labor cash allowances in Bid as directed in Bid Categories and Drawings.

B. Differences in costs between cash allowance and Cost of Work will be adjusted by Change Order.
   1. Document and submit material purchases by invoice.
   2. Document labor provided by time ticket signed by Construction Manager’s Field Superintendent.
   3. Payment will be net Cost of Work plus mark-up.

C. Allowances Schedule:
   1. $10,000.00 for repair/replacement of leaking pipes/fittings/ components at existing gas service near existing Boiler Room.

1.3 CONTINGENCY ALLOWANCES

A. A Contingency Allowance has been established and included in the cost of the Work.

B. Funds may be drawn from the Contingency Allowance only by Change Order.

C. Unused Contingency funds will be credited to the Owner by Change Order prior to Final Payment.

1.4 SCHEDULE OF VALUES

A. Submit printed schedule on AIA Form G703 - Continuation Sheet for G702. Contractor's standard form or electronic media printout following format of specified AIA form will be considered.

B. Submit Schedule of Values in duplicate within 15 days after date of Construction Manager-Subcontractor Agreement.

C. Format:
   1. Separate and group line items by Trade Subcontractor. Utilize Table of Contents of this Project Manual and identify each line item with title of major specification Section.
   2. Separate and group individual General Conditions line items and identify by title.
   3. Include a separate line item for Construction Managers Fee.
   4. Include a separate line item for Owner's Contingency.

D. Identify Allowances specified in this section as separate line items grouped as indicated in 1.4.C.

E. Revise schedule to list approved Change Orders with each Application for Payment.
   1. List approved Change Orders and applicable amount of change under each Trade Subcontractor, or Construction Manager grouping respectively.

1.5 APPLICATIONS FOR PAYMENT

A. Submit one copy of each application on AIA Form G702 - Application and Certificate for Payment and AIA G703 - Continuation Sheet for G702 or approved Contractor's electronic media driven form. Submit a pencil copy to the attention of the Construction Manager by the 20th of each month for approval. Once approved forward a final copy by mail to the office of the Construction Manager.

B. Content and Format: Utilize Schedule of Values for listing items in Application for Payment.

C. Submit updated construction schedule with each Application for Payment.

D. Payment Period: Submit at intervals stipulated in the Agreement.

E. Substantiating Data: When Architect/Engineer requires substantiating information, submit data justifying dollar amounts in question. Include the following with Application for Payment:
   1. Partial release of liens from major subcontractors and vendors.
   2. Affidavits attesting to off-site stored products.
   3. Construction progress schedules.

1.6 CHANGE PROCEDURES

A. The following procedures, as they apply, will flow from the Architect / Engineer, through the Construction Manager to the contractors and from the contractors to the Construction Manager.

B. Submittals: Submit name of individual authorized to receive change documents, and be responsible for informing others in Contractor's employ or Subcontractors of changes to the Work.

C. The Architect/Engineer will advise of minor changes in the Work not involving adjustment to Contract Sum/Price or Contract Time by issuing supplemental instructions in writing to the Contractor.

D. The Architect/Engineer may issue a Proposal Request or Bulletin including a detailed description of proposed change with supplementary or revised Drawings and specifications. Contractor will prepare and submit estimate of cost and any required change in Contract Time within 14 days.

E. Contractor may propose changes by submitting a request for change to Architect/Engineer, describing proposed change and its full effect on the Work. Include a statement describing reason for the change, and effect on Contract Sum/Price and Contract Time with full documentation and a statement describing effect on Work by separate or other Contractors.

F. Stipulated Sum/Price Change Order: Based on Proposal Request (Bulletins) and Contractor's fixed price quotation or Contractor's request for Change Order as approved by Architect/Engineer.

G. Unit Price Change Order: For contract unit prices and quantities, the Change Order will be executed on fixed unit price basis. For unit costs or quantities of units of work which are not pre-determined, execute Work under Construction Change Directive. Changes in Contract Sum/Price or Contract Time will be computed as specified for Time and Material Change Order.

H. Construction Change Directive: Architect/Engineer may issue directive, on AIA Form G713 Construction Change Directive signed by Owner, instructing Contractor to proceed with change in the Work, for subsequent inclusion in a Change Order. Document will describe changes in the Work, and designate method of determining any change in Contract Sum/Price or Contract Time. Promptly execute change.

I. Time and Material Change Order: Submit itemized account and supporting data after completion of change, within time limits indicated in Conditions of the Contract. Architect/Engineer will determine change allowable in Contract Sum/Price and Contract Time as provided in Contract Documents.

J. Maintain detailed records of work done on Time and Material basis. Provide full information required for evaluation of proposed changes, and to substantiate costs for changes in the Work.

K. Document each quotation for change in cost or time with sufficient data to allow evaluation of quotation.

L. Change Order Forms: Construction Managers approved Change Order form will be utilized.

M. Execution of Change Orders: Architect/Engineer will issue Change Orders for signatures of parties as provided in Conditions of the Contract.

N. Correlation Of Contractor Submittals:
   1. Promptly revise Schedule of Values and Application for Payment forms to record each authorized Change Order as separate line item and adjust Contract Sum/Price.
   2. Promptly revise progress schedules to reflect change in Contract Time, revise sub-schedules to adjust times for other items of work affected by the change, and resubmit.
   3. Promptly enter changes in Project Record Documents.

1.7 DEFECT ASSESSMENT

A. Replace the Work, or portions of the Work, not conforming to specified requirements.

B. If, in the opinion of the Architect/Engineer, it is not practical to remove and replace the Work, the Architect/Engineer will direct appropriate remedy or adjust payment.

C. The defective Work may remain, but unit sum/price will be adjusted to new sum/price at discretion of Owner.

D. Defective Work will be partially repaired to instructions of Architect/Engineer, and unit sum/price will be adjusted to new sum/price at discretion of Owner.

E. Individual specification sections may modify these options or may identify specific formula or percentage sum/price reduction.

F. Authority of Architect/Engineer to assess defects is final.

G. Non-Payment For Rejected Products: Payment will not be made for rejected products for any of the following:
   1. Products wasted or disposed of in a manner that is not acceptable.
   2. Products determined as unacceptable before or after placement.
   3. Products not completely unloaded from transporting vehicle.
   4. Products placed beyond lines and levels of required Work.
   5. Products remaining on hand after completion of the Work.
   6. Loading, hauling, and disposing of rejected products.

1.8 UNIT PRICES – Not used

1.9 MANDATORY ALTERNATES

A. Mandatory Alternates quoted on Bid Forms will be reviewed and accepted or rejected at Owner's option. Accepted Alternates will be identified in Owner-Contractor Agreement.

B. Coordinate related work and modify surrounding work.

C. Schedule of Alternates:
   1. Alternate No. 1:
      a. Removal & replacement of existing main distribution panel “MD” with a new main distribution panel “MDP”, installed at a new location, with new feeders from “MDP” as needed to reconnect to existing “MD” loads; and removal and replacement of existing sub-panel “DPA” with new sub-panel “DPA” installed at the same location and reconnecting existing feeders to existing “DPA” loads. Refer to 1-Line Diagram on Sheet E3.1.
   2. Alternate No. 2:
      a. Removal of existing BOECC Building 3” natural gas service header (located near the boiler room) and replacement with a 6” natural gas service header in the same location and connecting to the existing 3” natural gas main serving existing loads within the existing boiler room. Provide a new 5” natural gas feeder pipe tapped off new/upgraded 6” gas header routed across roof, down exterior wall, and underground to new generator. Refer to Alternate No. 2 Gas Load Schedule and Alternate No. 2 Gas Service Header Detail on Sheet P1.1.

PART 2 PRODUCTS - Not Used

PART 3 EXECUTION - Not Used

END OF SECTION

SECTION 01 30 00

ADMINISTRATIVE REQUIREMENTS

PART 1 GENERAL

1.1 SECTION INCLUDES

A. Coordination and project conditions.

B. Field engineering.

C. Preconstruction meeting.

D. Site mobilization meeting.

E. Progress meetings.

F. Periodic construction visits.

G. Pre-installation meetings.

H. Project Record Documents.

I. Acceptance of Preceding Work.

J. Cutting and patching.

K. Special procedures.

1.2 COORDINATION AND PROJECT CONDITIONS

A. Coordinate scheduling, submittals, and Work of various sections of Project Manual to ensure efficient and orderly sequence of installation of interdependent construction elements, with provisions for accommodating items installed later.

B. Verify utility requirements and characteristics of operating equipment are compatible with building utilities. Coordinate work of various sections having interdependent responsibilities for installing, connecting to, and placing in service, operating equipment.

C. Coordinate space requirements, supports, and installation of mechanical and electrical Work indicated diagrammatically on Drawings. Follow routing shown for pipes, ducts, and conduit, as closely as practicable; place runs parallel with lines of building. Utilize spaces efficiently to maximize accessibility for other installations, for maintenance, and for repairs.

D. In finished areas except as otherwise indicated, conceal pipes, ducts, and wiring within construction. Coordinate locations of fixtures and outlets with finish elements.

E. Coordinate completion and clean-up of Work of separate sections in preparation for Substantial Completion and for portions of Work designated for Owner's partial occupancy.

F. After Owner occupancy of premises, coordinate access to site for correction of defective Work and Work not in accordance with Contract Documents, to minimize disruption of Owner's activities.

1.3 FIELD ENGINEERING – Not used

1.4 PRECONSTRUCTION MEETING

A. Construction Manager will schedule meeting after Notice of Award.

B. Attendance Required: Owner, Architect/Engineer, Construction Manager, and Subcontractor's.

C. Agenda:
1. Execution of Contracts.
2. Submission of executed bonds and insurance certificates.
3. Distribution of Contract Documents.
4. Submission of list of products, schedule of values, and progress schedule.
5. Designation of personnel representing parties in Contract, and Architect/Engineer.
6. Procedures and processing of field decisions, submittals, substitutions, applications for payments, proposal request, Change Orders, and Contract closeout procedures.
7. Scheduling.

D. The Construction Manager shall record minutes and distribute copies within two days after meeting to participants, with copies to Architect/Engineer, Owner, and those affected by decisions made.

1.5 PROGRESS MEETINGS

A. The Construction Manager will schedule and administer meetings throughout progress of the Work at maximum bi-weekly intervals.

B. The Construction Manager will make arrangements for meetings, prepare agenda with copies for participants, preside at meetings.

C. Attendance Required: Construction Manager's Project Manager and On-site Superintendent, Subcontractor's Project Manager and Job Superintendent, major suppliers, Owner, Architect/Engineer, as appropriate to agenda topics for each meeting.

D. Agenda:
1. Review minutes of previous meetings.
2. Review of Work progress.
3. Field observations, problems, and decisions.
4. Identification of problems impeding planned progress.
5. Review of submittals schedule and status of submittals.
6. Review of off-site fabrication and delivery schedules.
7. Maintenance of progress schedule.
8. Corrective measures to regain projected schedules.
9. Planned progress during succeeding work period.
10. Coordination of projected progress.
11. Maintenance of quality and work standards.
12. Effect of proposed changes on progress schedule and coordination.
13. Other business relating to Work.

14. Coordination of work by Owner's Contractor with work of the General Contract.
15. Project Record Documents.

E. The Construction Manager shall record minutes and distribute copies within two days after meeting to participants, with copies to Architect/Engineer, Owner, and those affected by decisions made.

1.6 PERIODIC CONSTRUCTION VISITS

A. The Architect and Owner will visit the project site at maximum weekly intervals. The purpose of the visits will be to monitor the progress and quality of the work.

B. The Construction Manager's Site Superintendent shall be available for meetings with the Architect and Owner.

C. Agenda:
1. Review of Work in progress.
2. Field observations, problems, and decisions.
3. Identification of problems which impede planned progress.
4. Maintenance of progress schedule.
5. Corrective measures to regain projected schedules.
6. Planned progress during succeeding work period.
7. Maintenance of quality and work standards.
8. Other business relating to Work.

1.7 PRE-INSTALLATION MEETINGS

A. When required in individual specification sections, convene pre-installation meetings at Project site prior to commencing work of specific section.

B. Require attendance of parties directly affecting, or affected by, Work of specific section.

C. Notify Architect/Engineer four days in advance of meeting date.

D. Prepare agenda and preside at meeting:
1. Review conditions of installation, preparation and installation procedures.
2. Review coordination with related work.

E. Record minutes and distribute copies within two days after meeting to participants, with copies to Architect/Engineer, Owner, and those affected by decisions made.

1.8 PROJECT RECORD DOCUMENTS

A. The Construction Manager shall maintain and update Project Record Drawings (As-Built Drawings) on site during construction. Each Contractor shall be responsible to update the as built drawings on a weekly basis.

B. Project Record Documents shall be available for review by the Architect.

PART 2 PRODUCTS - Not Used

PART 3 EXECUTION

3.1 ACCEPTANCE OF PRECEDING WORK

A. Before starting any operation, each Contractor(s) shall examine work performed by others to which their work adjoins or is applied and shall report to the Construction Manager any conditions that will prevent satisfactory accomplishment of their work.

B. Failure to notify the Construction Manager of deficiencies or faults in preceding work will constitute acceptance thereof and waive of any claims to its usability.

3.2 CUTTING AND PATCHING

A. Employ skilled and experienced installer to perform cutting and patching.

B. Submit written request in advance of cutting or altering elements affecting:
1. Structural integrity of element.
2. Integrity of weather-exposed or moisture-resistant elements.
3. Efficiency, maintenance, or safety of element.
4. Visual qualities of sight exposed elements.
5. Work of Owner or separate contractor.

C. Execute cutting, fitting, and patching including excavation and fill, to complete Work, and to:
1. Fit the several parts together, to integrate with other Work.
2. Uncover Work to install or correct ill-timed Work.
3. Remove and replace defective and non-conforming Work.
4. Remove samples of installed Work for testing.
5. Provide openings in elements of Work for penetrations of mechanical and electrical Work.

D. Execute work by methods to avoid damage to other Work, and to provide proper surfaces to receive patching and finishing.

E. Cut masonry and concrete materials using masonry saw or core drill.

F. Restore Work with new products in accordance with requirements of Contract Documents.

G. Fit Work tight to pipes, sleeves, ducts, conduit, and other penetrations through surfaces.

H. Maintain integrity of wall, ceiling, or floor construction; completely seal voids.

I. Where patching areas of masonry construction subject to wind loading, remove and replace unit. Where patching penetrations in masonry not subject to wind loading, remove face shell and replace with masonry soap matching existing masonry material. Where concealed from view, penetrations in masonry may be patched with mortar. Patching exposed to view masonry penetrations with mortar will not be accepted.

J. At penetrations of fire rated walls, partitions, ceiling, or floor construction, completely seal voids with fire rated material in accordance with Section 07 84 00, to full thickness of penetrated element.

K. Refinish surfaces to match adjacent finishes. For continuous surfaces, refinish to nearest intersection; for assembly, refinish entire unit.

L. Identify hazardous substances or conditions exposed during the Work to Architect/Engineer for decision or remedy.

3.3 SPECIAL PROCEDURES

A. Materials: As specified in product sections; match existing with new products and salvaged products for patching and extending work.

B. Employ skilled and experienced installer to perform alteration work.

C. Cut, move, or remove items as necessary for access to alterations and renovation Work. Replace and restore at completion.

D. Remove unsuitable material not marked for salvage, including rotted wood, corroded metals, and deteriorated masonry and concrete. Replace materials as specified for finished Work.

E. Remove debris and abandoned items from area and from concealed spaces.

F. Prepare surface and remove surface finishes to permit installation of new work and finishes.

G. Close openings in exterior surfaces to protect existing work from weather and extremes of temperature and humidity.

H. Remove, cut, and patch Work in manner to minimize damage and to permit restoring products and finishes to original or specified condition.

I. Refinish existing visible surfaces to remain in renovated rooms and spaces, to specified condition for each material, with neat transition to adjacent finishes.

J. Where new Work abuts or aligns with existing, provide smooth and even transition. Patch Work to match existing adjacent Work in texture and appearance.

K. When finished surfaces are cut so that smooth transition with new Work is not possible, terminate existing surface along straight line at natural line of division and submit recommendation to Architect/Engineer for review.

L. Finish surfaces as specified in individual product sections.

END OF SECTION

SECTION 01 33 00

SUBMITTAL PROCEDURES

PART 1 GENERAL

1.1 SECTION INCLUDES

A. Submittal procedures.

B. Construction progress schedules.

C. Proposed products list.

D. Product data.

E. Shop drawings.

F. Samples.

G. Design data.

H. Test reports.

I. Certificates.

J. Manufacturer's instructions.

K. Manufacturer's field reports.

L. Erection drawings.

1.2 SUBMITTAL PROCEDURES

A. Prepare all submittals as per subsequent instructions below. Scan and transmit electronically to the attention of the Construction Manager. (jerrybrown@sugarconstruction.com).
   1. Sequentially number submittals. Include the specification section in the submittal numbering system. Mark revised submittals with original number and sequential alphabetic suffix.
   2. Identify Project, Contractor, subcontractor and supplier; product designated by name indicated in specifications.

B. Apply Contractor's stamp, signed or initialed certifying that review, approval, verification of products required, field dimensions, adjacent construction Work, and coordination of information is in accordance with requirements of the Work and Contract Documents.

C. Schedule submittals to expedite Project. Coordinate submission of related items.

D. For each submittal for review, allow 15 days excluding delivery time to and from Construction Manager. Submittals for long lead time items shall be expedited by the Contractor in order to allow for the Owner’s completion schedule. Notify Construction Manager of long lead time items requiring expedited review.

E. Identify variations from Contract Documents and product or system limitations which may be detrimental to successful performance of completed Work.

F. Allow space on submittals for Construction Manager and Architect/Engineer review stamps.

G. When revised for resubmission, identify changes made since previous submission.

H. Distribute copies of reviewed submittals as appropriate. Instruct parties to promptly report inability to comply with requirements.

I. After submittals are electronically returned stamped reviewed by the architect make (4) hard copies with any required corrections and mail to the attention of the Construction Manager.
   1. Provide record copies required by governing authorities which are in addition to copies specified for submittal to Construction Manager.

J. Submittals not requested will not be recognized or processed.

K. Where specified below, retain one copy of each submittal to be turned over to the Owner as record documentation in accordance with Section 01 70 00.

1.3 CONSTRUCTION PROGRESS SCHEDULES

A. Submit initial schedules within 7 days after Notice to Proceed. After review, resubmit required revised data within ten days.

B. Submit revised Progress Schedules with each Application for Payment.

C. Distribute copies of reviewed schedules to Project site file, subcontractors, suppliers, and other concerned parties.

D. Instruct recipients to promptly report, in writing, problems anticipated by projections indicated in schedules.

E. Utilize Contractor’s standard computer generated schedule format.

F. Show complete sequence of construction by activity, identifying Work of separate stages and other logically grouped activities. Indicate early and late start, early and late finish, float dates, and duration.

G. Indicate estimated percentage of completion for each item of Work at each submission.

H. Submit separate schedule of submittal dates for shop drawings, product data, and samples, and dates reviewed submittals will be required from Architect/Engineer. Indicate decision dates for selection of finishes.

I. Indicate delivery dates for Owner furnished products.

J. Revisions To Schedules:
   1. Indicate progress of each activity to date of submittal, and projected completion date of each activity.
   2. Identify activities modified since previous submittal, major changes in scope, and other identifiable changes.

3. Prepare narrative report to define problem areas, anticipated delays, and impact on Schedule. Report corrective action taken, or proposed, and its effect [including effect of changes on schedules of separate contractors].

1.4 PROPOSED PRODUCTS LIST

A. Within 7 days after Notice to Proceed, submit list of major products proposed for use, with name of manufacturer, trade name, and model number of each product.

B. For products specified only by reference standards, give manufacturer, trade name, model or catalog designation, and reference standards.

1.5 PRODUCT DATA

A. Product Data: Submit to Construction Manager for review by Architect/Engineer for limited purpose of checking for conformance with information given and design concept expressed in Contract Documents.

B. Mark each copy to identify applicable products, models, options, and other data. Supplement manufacturers' standard data to provide information specific to this Project.

C. Indicate product utility and electrical characteristics, utility connection requirements, and location of utility outlets for service for functional equipment and appliances.

D. After review, produce copies and distribute in accordance with SUBMITTAL PROCEDURES article and for record documents described in Section 01 70 00 - Execution and Closeout Requirements.

1.6 SHOP DRAWINGS

A. Shop Drawings: Submit to Construction Manager for review by Architect/Engineer for limited purpose of checking for conformance with information given and design concept expressed in Contract Documents.

B. Indicate special utility and electrical characteristics, utility connection requirements, and location of utility outlets for service for functional equipment and appliances.

C. When required by individual specification sections, provide shop drawings signed and sealed by professional engineer responsible for designing components shown on shop drawings.
   1. Include signed and sealed calculations to support design.
   2. Submit drawings and calculations in form suitable for submission to and approval by authorities having jurisdiction.
   3. Make revisions and provide additional information when required by authorities having jurisdiction.

D. After review, produce copies and distribute in accordance with SUBMITTAL PROCEDURES article and for record documents described in Section 01 70 00 - Execution and Closeout Requirements.

1.7 SAMPLES

A. Samples: Submit to Construction Manager for review by Architect/Engineer for limited purpose of checking for conformance with information given and design concept expressed in Contract Documents.

B. Samples For Selection as Specified in Product Sections:
   1. Submit to Construction Manager for review by Architect/Engineer for aesthetic, color, or finish selection.
   2. Submit samples of finishes from full range of manufacturers' standard colors, including premium and/or custom colors where specified, textures, and patterns for Architect/Engineer selection.
   3. Architect will issue a schedule indicating colors and finishes selected. Construction Manager shall reproduce and distribute.

C. Submit samples to illustrate functional and aesthetic characteristics of Products, with integral parts and attachment devices. Coordinate sample submittals for interfacing work.

D. Include identification on each sample, with full Project information.

E. Submit number of samples specified in individual specification sections; Architect/Engineer will retain sample.

F. Samples will not be used for testing purposes unless specifically stated in specification section.

1.8 DESIGN DATA

A. Submit to Construction Manager for Architect/Engineer's knowledge as contract administrator and for Owner.

B. Submit for information for limited purpose of assessing conformance with information given and design concept expressed in Contract Documents.

1.9 TEST REPORTS

A. Submit to Construction Manager for Architect/Engineer's knowledge as contract administrator and for Owner.

B. Submit test reports for information for limited purpose of assessing conformance with information given and design concept expressed in Contract Documents.

1.10 CERTIFICATES

A. When specified in individual specification sections, submit certification by manufacturer, installation/application subcontractor, or Contractor to Construction Manager for transmittal to Architect/Engineer, in quantities specified for Product Data.

B. Indicate material or product conforms to or exceeds specified requirements. Submit supporting reference data, affidavits, and certifications as appropriate.

C. Certificates may be recent or previous test results on material or Product, but must be acceptable to Architect/Engineer.

1.11 MANUFACTURER'S INSTRUCTIONS

A. When specified in individual specification sections, submit printed instructions for delivery, storage, assembly, installation, start-up, adjusting, and finishing, to Construction Manager for delivery to Owner in quantities specified for Product Data.

B. Indicate special procedures, perimeter conditions requiring special attention, and special environmental criteria required for application or installation.

1.12 MANUFACTURER'S FIELD REPORTS

A. Submit reports to Construction Manager for Architect/Engineer's benefit as contract administrator and for Owner.

B. Submit report in duplicate within 2 days of observation to Construction Manager for transmittal to Architect/Engineer for information.

C. Submit for information for limited purpose of assessing conformance with information given and design concept expressed in Contract Documents.

1.13 ERECTION DRAWINGS

A. Submit drawings to Construction Manager for Architect/Engineer's benefit as contract administrator and for Owner.

B. Submit for information for limited purpose of assessing conformance with information given and design concept expressed in Contract Documents.

C. Data indicating inappropriate or unacceptable Work may be subject to action by Architect/Engineer or Owner.

PART 2 PRODUCTS - Not Used

PART 3 EXECUTION - Not Used

END OF SECTION

SECTION 01 40 00

QUALITY REQUIREMENTS

PART 1 GENERAL

1.1 SECTION INCLUDES

A. Quality control and control of installation.

B. Tolerances.

C. References.

D. Labeling.

E. Mock-up requirements.

F. Testing and inspection services.

G. Manufacturers' field services.

H. Examination.

I. Preparation.

1.2 QUALITY CONTROL AND CONTROL OF INSTALLATION

A. Monitor quality control over suppliers, manufacturers, products, services, site conditions, and workmanship, to produce Work of specified quality.

B. Comply with manufacturers' instructions, including each step in sequence.

C. When manufacturers' instructions conflict with Contract Documents, request clarification from Architect/Engineer before proceeding.

D. Comply with specified standards as minimum quality for the Work except where more stringent tolerances, codes, or specified requirements indicate higher standards or more precise workmanship.

E. Perform Work by persons qualified to produce required and specified quality.

F. Verify field measurements are as indicated on Shop Drawings or as instructed by manufacturer.

G. Secure products in place with positive anchorage devices designed and sized to withstand stresses, vibration, physical distortion, or disfigurement.

1.3 TOLERANCES

A. Monitor fabrication and installation tolerance control of products to produce acceptable Work. Do not permit tolerances to accumulate.

B. Comply with manufacturers' tolerances. When manufacturers' tolerances conflict with Contract Documents, request clarification from Architect/Engineer before proceeding.

C. Adjust products to appropriate dimensions; position before securing products in place.

1.4 REFERENCES

A. For products or workmanship specified by association, trade, or other consensus standards, comply with requirements of standard, except when more rigid requirements are specified or are required by applicable codes.

B. Conform to reference standard by date of issue current on date of Contract Documents, except where specific date is established by code.

C. Obtain copies of standards where required by product specification sections.

D. When specified reference standards conflict with Contract Documents, request clarification from Architect/Engineer before proceeding.

E. Neither contractual relationships, duties, nor responsibilities of parties in Contract nor those of Architect/Engineer shall be altered from Contract Documents by mention or inference otherwise in reference documents.

1.5 LABELING

A. Attach label from agency approved by authority having jurisdiction for products, assemblies, and systems required to be labeled by applicable code.

B. Label Information: Include manufacturer's or fabricator's identification, approved agency identification, and the following information, as applicable, on each label.
   1. Model number.
   2. Serial number.
   3. Performance characteristics.

1.6 MOCK-UP REQUIREMENTS - Not used

1.7 TESTING AND INSPECTION SERVICES – Not used

1.8 MANUFACTURERS' FIELD SERVICES

A. When specified in individual specification sections, require material or product suppliers or manufacturers to provide qualified staff personnel to observe site conditions, conditions of surfaces and installation, quality of workmanship, start-up of equipment, test, adjust and balance of equipment as applicable, and to initiate instructions when necessary.

B. Submit qualifications of observer to Architect/Engineer 30 days in advance of required observations.

C. Report observations and site decisions or instructions given to applicators or installers that are supplemental or contrary to manufacturers' written instructions.

D. Refer to Section 01 33 00 - Submittal Procedures, MANUFACTURERS' FIELD REPORTS article.

PART 2 PRODUCTS - Not Used

PART 3 EXECUTION

3.1 EXAMINATION

A. Verify existing site conditions and substrate surfaces are acceptable for subsequent Work. Beginning new Work means acceptance of existing conditions.

B. Verify existing substrate is capable of structural support or attachment of new Work being applied or attached.

C. Examine and verify specific conditions described in individual specification sections and Drawings.

D. Verify utility services are available, of correct characteristics, and in correct locations.

E. Report any conditions which would negatively affect the quality, appearance, or performance of the finished Work to the Architect.

3.2 PREPARATION

A. Clean substrate surfaces prior to applying next material or substance.

B. Seal cracks or openings of substrate prior to applying next material or substance.

C. Apply manufacturer required or recommended substrate primer, sealer, or conditioner prior to applying new material or substance in contact or bond.

END OF SECTION

SECTION 01 50 00

TEMPORARY FACILITIES AND CONTROLS

PART 1 GENERAL

1.1 SECTION INCLUDES

A. Temporary Utilities:
   1. Temporary electricity.
   2. Temporary ventilation.
   3. Telephone service.
   4. Email service
   5. Temporary sanitary facilities.

B. Construction Facilities:
   1. Field offices and sheds.
   2. Parking.
   3. Progress cleaning and waste removal.
   4. Fire prevention facilities.

C. Temporary Controls:
   1. Barriers.

D. Removal of utilities, facilities, and controls.

1.2 TEMPORARY ELECTRICITY

A. Owner will pay cost of energy used. Exercise measures to conserve energy. Utilize Owner's existing power service.

B. Permanent convenience receptacles may be utilized during construction.

1.3 TEMPORARY VENTILATION

A. Ventilate enclosed areas to achieve curing of materials, to dissipate humidity, and to prevent accumulation of dust, fumes, vapors, or gases.

1.4 TELEPHONE SERVICE

A. Provide, maintain, and pay for telephone service to field office at time of project mobilization.

1.5 EMAIL SERVICE

A. Provide, maintain and pay for email service to site Superintendent and Project Manager at time of project mobilization

1.6 TEMPORARY SANITARY FACILITIES

A. Existing designated facilities may be used during construction operations. Maintain daily in clean and sanitary condition.

1.7 FIELD OFFICES AND SHEDS

A. Trade Contractors requiring on site storage shall provide suitable storage sheds for the storage of materials and equipment.

B. Small storage trailers may be placed on-site in paved parking areas where designated by Owner.

C. Field office and sheds shall be located on paved parking areas in location approved by Owner. Contractors are responsible for restoration of any damage to site resulting from field office or sheds.

1.8 PARKING

A. Use of existing on-site streets and driveways used for construction traffic is permitted. Tracked vehicles not allowed on paved areas.

B. Do not allow heavy vehicles or construction equipment in parking areas without measures to prevent damage to pavement.

1.9 PROGRESS CLEANING AND WASTE REMOVAL

A. Maintain areas free of waste materials, debris, and rubbish. Maintain site in clean and orderly condition.

B. Remove debris and rubbish from pipe chases, plenums, attics, crawl spaces, and other closed or remote spaces, prior to enclosing spaces.

C. Collect and remove waste materials, debris, and rubbish from site weekly and dispose off-site.

1.10 FIRE PREVENTION FACILITIES

A. Smoking on school property is prohibited by law.

B. Establish fire watch for cutting and welding and other hazardous operations capable of starting fires. Maintain fire watch before, during, and after hazardous operations until threat of fire does not exist.

C. Portable Fire Extinguishers: NFPA 10; 10 pound capacity, 4A-60B: C UL rating.
   1. Provide one fire extinguisher on each floor of buildings under construction and demolition.
   2. Provide minimum one fire extinguisher in every construction trailer and storage shed.
   3. Provide minimum one fire extinguisher on roof during roofing operations using heat producing equipment.

1.11 BARRIERS

A. Provide barriers to prevent unauthorized entry to construction areas and to protect existing facilities and adjacent properties from damage from construction operations.

B. Provide barriers to separate construction areas from adjacent occupied areas.

C. Protect non-owned vehicular traffic, stored materials, site, and structures from damage.

1.12 ENCLOSURES AND PROTECTION

A. Interior Enclosures:
   1. Provide temporary enclosures as required to prevent penetration of dust and moisture into adjacent building areas, and to prevent damage to existing materials and equipment.
   2. Partition Construction: Framing and suitable plastic sheeting supported to prevent displacement during construction operations.

1.13 REMOVAL OF UTILITIES, FACILITIES, AND CONTROLS

A. Remove temporary utilities, equipment, facilities, materials, prior to Substantial Completion inspection.

B. Remove underground installations to minimum depth of 2 feet. Grade site as indicated on Drawings.

C. Clean and repair damage caused by installation or use of temporary work.

D. Restore existing facilities used during construction to original condition. Restore permanent facilities used during construction to specified condition.

PART 2 PRODUCTS - Not Used

PART 3 EXECUTION - Not Used

END OF SECTION

SECTION 01 60 00

PRODUCT REQUIREMENTS

PART 1 GENERAL

1.1 SECTION INCLUDES

A. Products.

B. Product delivery requirements.

C. Product storage and handling requirements.

D. Product options.

E. Product substitution procedures.

F. Equipment electrical characteristics and components.

1.2 PRODUCTS

A. Furnish products of qualified manufacturers suitable for intended use. Furnish products of each type by single manufacturer unless specified otherwise.

B. Do not use materials and equipment removed from existing premises, except as specifically permitted by Contract Documents.

C. Furnish interchangeable components from same manufacturer for components being replaced.

1.3 PRODUCT DELIVERY REQUIREMENTS

A. Transport and handle products in accordance with manufacturer's instructions.

B. Promptly inspect shipments to ensure products comply with requirements, quantities are correct, and products are undamaged.

C. Provide equipment and personnel to handle products by methods to prevent soiling, disfigurement, or damage.

1.4 PRODUCT STORAGE AND HANDLING REQUIREMENTS

A. Store and protect products in accordance with manufacturers' instructions.

B. Store with seals and labels intact and legible.

C. Store sensitive products in weather tight, climate controlled, enclosures in an environment favorable to product.

D. For exterior storage of fabricated products, place on sloped supports above ground.

E. Provide bonded off-site storage and protection when site does not permit on-site storage or protection.

F. Cover products subject to deterioration with impervious sheet covering. Provide ventilation to prevent condensation and degradation of products.

G. Store loose granular materials on solid flat surfaces in well-drained area. Prevent mixing with foreign matter.

H. Provide equipment and personnel to store products by methods to prevent soiling, disfigurement, or damage.

I. Arrange storage of products to permit access for inspection. Periodically inspect to verify products are undamaged and are maintained in acceptable condition.

1.5 PRODUCT OPTIONS

A. Products Specified by Reference Standards or by Description Only: Any product meeting those standards or description.

B. Products Specified by Naming One or More Manufacturers: Products of one of manufacturers named and meeting specifications, no options or substitutions allowed.

C. Products Specified by Naming One or More Manufacturers with an “Or Equal” provision: Any Product meeting the quality standards or description. Pre-bid requests for approval of Products specified with an “or equal” provision will not be acknowledged. Acceptability of “or equal” Products will be determined by the Architect during the submittal process based upon the quality or suitability of the Product proposed.

D. Products Specified by Naming One or More Manufacturers with Provision for Substitutions: Submit request for substitution for any manufacturer not named in accordance with the following article.

1.6 PRODUCT SUBSTITUTION PROCEDURES

A. Instructions to Bidders specify time restrictions for submitting requests for Substitutions during bidding period to requirements specified in this section.

B. Post-Bid Substitutions will only be considered when a product becomes unavailable through no fault of Contractor.

C. Document each request with complete data substantiating compliance of proposed Substitution with Contract Documents.

D. A request constitutes a representation that Bidder:
   1. Has investigated proposed product and determined that it meets or exceeds quality level of specified product.
   2. Will provide same warranty for Substitution as for specified product.
   3. Will coordinate installation and make changes to other Work which may be required for the Work to be complete with no additional cost to Owner.
   4. Waives claims for additional costs or time extension which may subsequently become apparent.

5. Will reimburse Owner and/or Architect/Engineer for review or redesign services associated with re-approval by authorities having jurisdiction.

E. Substitutions will not be considered when they are indicated or implied on Shop Drawing or Product Data submittals, without separate written request, or when acceptance will require revision to Contract Documents.

PART 2 PRODUCTS – Not Used

PART 3 EXECUTION - Not Used

END OF SECTION

SECTION 01 70 00

EXECUTION AND CLOSEOUT REQUIREMENTS

PART 1 GENERAL

1.1 SECTION INCLUDES

A. Closeout procedures.

B. Final cleaning.

C. Starting of systems.

D. Demonstration and instructions.

E. Testing, adjusting and balancing.

F. Protecting installed construction.

G. Project record documents.

H. Operation and maintenance data.

I. Manual for materials and finishes.

J. Manual for equipment and systems.

K. Spare parts and maintenance products.

L. Product warranties and product bonds.

M. Maintenance service.

1.2 CLOSEOUT PROCEDURES

A. Submit certification that the work is Substantially Complete and approved for occupancy by the Authority Having Jurisdiction.

B. Submit to the Construction Manager a list of items remaining to be completed or corrected for final completion. Architect will utilize the Construction Manager's list as the basis for the final Punch List.

C. Architect will inspect the work and will prepare a list of items to be corrected or completed for final acceptance of the work.

D. Upon completion of all work and correction of items included on the Punch List prepared by the Architect, submit written certification that Contract Documents have been reviewed, and that Work is complete in accordance with Contract Documents and ready for Architect/Engineer's final review. Architect will visit the site and will verify that all items have been properly completed and/or corrected.

E. Contractor shall reimburse the Owner for all re-inspection costs incurred as a result of Contractor's failure to complete and/or correct all items identified by the Architect. Charges to the Contractor shall be made at such times and in such amounts as the Architect invoices the Owner under the rate schedule in effect at the time of service. Such charges to the Contractor will be deducted from the Contractor's progress payment or final payment as applicable.

F. Provide submittals to Architect/Engineer required by authorities having jurisdiction.

G. Submit final Application for Payment identifying total adjusted Contract Sum, previous payments, and sum remaining due.

H. Owner will occupy portions of buildings and sites as specified in Section 01 10 00 - Summary.

1.3 FINAL CLEANING

A. Execute final cleaning prior to final project assessment.

B. Clean equipment and fixtures to sanitary condition with cleaning materials appropriate to surface and material being cleaned.

C. Clean site; sweep paved areas, rake clean landscaped surfaces.

D. Remove waste and surplus materials, rubbish, and construction facilities from site.

1.4 STARTING OF SYSTEMS

A. Coordinate schedule for start-up of various equipment and systems.

B. Notify Architect/Engineer seven days prior to start-up of each item.

C. Verify each piece of equipment or system has been checked for proper lubrication, drive rotation, belt tension, control sequence, and for conditions which may cause damage.

D. Verify tests, meter readings, and specified electrical characteristics agree with those required by equipment or system manufacturer.

E. Verify wiring and support components for equipment are complete and tested.

F. Execute start-up under supervision of applicable Contractors' personnel in accordance with manufacturers' instructions.

G. When specified in individual specification Sections, require manufacturer to provide authorized representative to be present at site to inspect, check, and approve equipment or system installation prior to start-up, and to supervise placing equipment or system in operation.

H. Submit a written report in accordance with Section 01 33 00 - Submittal Procedures that equipment or system has been properly installed and is functioning correctly.

1.5 DEMONSTRATION AND INSTRUCTIONS

A. Demonstrate operation and maintenance of products to Owner's personnel two weeks prior to date of final inspection.

B. Demonstrate Project equipment instructed by qualified manufacturer's representative who is knowledgeable about the Project.

C. For equipment or systems requiring seasonal operation, perform demonstration for other season within six months.

D. Utilize operation and maintenance manuals as basis for instruction. Review contents of manual with Owner's personnel in detail to explain all aspects of operation and maintenance.

E. Demonstrate start-up, operation, control, adjustment, trouble-shooting, servicing, maintenance, and shutdown of each item of equipment at agreed time, at equipment location.

F. Prepare and insert additional data in operations and maintenance manuals when need for additional data becomes apparent during instruction.

G. Required instruction time for each item of equipment and system is specified in individual sections.

1.6 TESTING, ADJUSTING AND BALANCING – Not Used

1.7 PROTECTING INSTALLED CONSTRUCTION

A. Protect installed Work and provide special protection where specified in individual specification sections.

B. Provide temporary and removable protection for installed products. Control activity in immediate work area to prevent damage.

C. Provide protective coverings at walls, projections, jambs, sills, and soffits of openings.

D. Protect finished floors, stairs, and other surfaces from traffic, dirt, wear, damage, or movement of heavy objects, by protecting with durable sheet materials.

E. Prohibit traffic or storage upon waterproofed or roofed surfaces. When traffic or activity is necessary, obtain recommendations for protection from waterproofing or roofing material manufacturer.

F. Prohibit traffic from landscaped areas.

1.8 PROJECT RECORD DOCUMENTS

A. Maintain on site one set of the following record documents; record actual revisions to the Work:
   1. Drawings.

2. Specifications.
3. Addenda.
4. Change Orders and other modifications to the Contract.
5. Reviewed Shop Drawings, Product Data, and Samples.
6. Manufacturer's instruction for assembly, installation, and adjusting.

B. Ensure entries are complete and accurate, enabling future reference by Owner.

C. Store record documents separate from documents used for construction.

D. Record information concurrent with construction progress, not less than weekly.

E. Specifications: Legibly mark and record at each product section description of actual products installed, including the following:
1. Manufacturer's name and product model and number.
2. Product substitutions or alternates utilized.
3. Changes made by Addenda and modifications.

F. Record Drawings and Shop Drawings: Legibly mark each item to record actual construction including:
1. Field changes of dimension and detail.
2. Details not on original Contract drawings.

G. Submit documents to Architect/Engineer with claim for final Application for Payment.

1.9 OPERATION AND MAINTENANCE DATA

A. Submit data bound in 8-1/2 x 11 inch (A4) text pages, three D side ring binders with durable plastic covers.

B. Submit one copy of completed volumes 15 days prior to final inspection. Draft copy will be reviewed and returned, with Architect/Engineer comments. Revise content of document sets as required prior to final submission.

C. Prepare binder cover with printed title "OPERATION AND MAINTENANCE INSTRUCTIONS", title of project, and subject matter of binder when multiple binders are required.

D. Internally subdivide binder contents with permanent page dividers, logically organized as described below; with tab titling clearly printed under reinforced laminated plastic tabs.

E. Drawings: Provide with reinforced punched binder tab. Bind in with text; fold larger drawings to size of text pages.

F. Contents: Prepare Table of Contents for each volume, with each product or system description identified, typed on white paper, in three parts as follows:
1. Part 1: Directory, listing names, addresses, and telephone numbers of Architect/Engineer, Contractor, Subcontractors, and major equipment suppliers.
2. Part 2: Operation and maintenance instructions, arranged by system and subdivided by specification section. For each category, identify names, addresses, and telephone numbers of Subcontractors and suppliers. Include the following:
   a. Significant design criteria.

b. List of equipment.
c. Parts list for each component.
d. Operating instructions.
e. Maintenance instructions for equipment and systems.
f. Maintenance instructions for special finishes, including recommended cleaning methods and materials, and special precautions identifying detrimental agents.

3. Part 3: Project documents and certificates, including the following:
   a. Shop drawings and product data.
   b. Air and water balance reports.
   c. Certificates.
   d. Photocopies of warranties and bonds.

1.10 MANUAL FOR MATERIALS AND FINISHES – Not Used

1.11 MANUAL FOR EQUIPMENT AND SYSTEMS

A. Submit one copy of completed volumes 15 days prior to final inspection. Draft copy will be reviewed and returned, with Architect/Engineer comments. Revise content of document sets as required prior to final submission.

B. Submit two sets of revised final volumes in final form with claim for Final Application for Payment.

C. Each Item of Equipment and Each System: Include description of unit or system, and component parts. Identify function, normal operating characteristics, and limiting conditions. Include performance curves, with engineering data and tests, and complete nomenclature and model number of replaceable parts.

D. Panelboard Circuit Directories: Provide electrical service characteristics, controls, and communications; typed.

E. Include color coded wiring diagrams as installed.

F. Operating Procedures: Include start-up, break-in, and routine normal operating instructions and sequences. Include regulation, control, stopping, shut-down, and emergency instructions. Include summer, winter, and special operating instructions.

G. Maintenance Requirements: Include routine procedures and guide for preventative maintenance and trouble shooting; disassembly, repair, and reassembly instructions; and alignment, adjusting, balancing, and checking instructions.

H. Include servicing and lubrication schedule, and list of lubricants required.

I. Include manufacturer's printed operation and maintenance instructions.

J. Include sequence of operation by controls manufacturer.

K. Include original manufacturer's parts list, illustrations, assembly drawings, and diagrams required for maintenance.

L. Include control diagrams by controls manufacturer as installed.

M. Include Contractor's coordination drawings, with color coded piping diagrams as installed.

N. Include charts of valve tag numbers, with location and function of each valve, keyed to flow and control diagrams.

O. Include list of original manufacturer's spare parts, current prices, and recommended quantities to be maintained in storage.

P. Include test and balancing reports as specified in Section 01 40 00 - Quality Requirements.

Q. Additional Requirements: As specified in individual product specification sections.

R. Include listing in Table of Contents for design data, with tabbed dividers and space for insertion of data.

1.12 SPARE PARTS AND MAINTENANCE PRODUCTS – Not used

1.13 PRODUCT WARRANTIES AND PRODUCT BONDS

A. Obtain warranties and bonds executed in duplicate by responsible subcontractors, suppliers, and manufacturers, within ten days after completion of applicable item of work.

B. Execute and assemble transferable warranty documents and bonds from subcontractors, suppliers, and manufacturers.

C. Verify documents are in proper form, contain full information, and are notarized.

D. Co-execute submittals when required.

E. Include Table of Contents and assemble in three D side ring binder with durable plastic cover.

F. Submit prior to final Application for Payment.

G. Time Of Submittals:
1. For equipment or component parts of equipment put into service during construction with Owner's permission, submit documents within ten days after acceptance.
2. Make other submittals within ten days after Date of Substantial Completion, prior to final Application for Payment.
3. For items of Work for which acceptance is delayed beyond Date of Substantial Completion, submit within ten days after acceptance, listing date of acceptance as beginning of warranty or bond period.

1.14 MAINTENANCE SERVICE – Not used

PART 2 PRODUCTS - Not Used

PART 3 EXECUTION - Not Used

END OF SECTION

SECTION 22 0001

GENERAL PLUMBING REQUIREMENTS

PART 1 GENERAL

1.01 DESCRIPTION OF WORK

A. This Division includes all labor, materials, equipment, tools, supervision, start-up services, Owner training, etc., including all incidental and related items, necessary to complete installation and successfully test and start up and operate the Plumbing systems indicated on the drawings, AND as described in each Section of Division 220000 Specifications.

B. All drawings and General Provisions of the Contract, including the General Conditions, Supplementary General Conditions, and Division 1 specification sections, apply to work of all Division 22 sections. The items in this section are not intended to supersede, but are supplementary to, the requirements set forth in other Divisions of the specifications.

C. The Contractor, and their Subcontractors and Suppliers, shall include in their bid all materials, labor, and equipment involved, in accordance with all local customs, codes, rules, regulations; and secure compliance of all parts of the Specifications and Drawings regardless of Sectional inclusion in these Specifications.

D. The Contractor shall be responsible for the complete and satisfactory accomplishment of all Work inclusive of whatever miscellaneous material and/or appurtenances are required to perfect the installation, and demonstrate that all plumbing systems will operate satisfactorily under normal operating conditions.

1.02 DRAWINGS & SPECIFICATIONS

A. The drawings are diagrammatic and show the general location and arrangement of equipment, piping and related items. They shall be followed as closely as elements of the construction will permit. The Contractor shall provide/install all plumbing systems, and associated equipment, complete and include all necessary offsets, fittings, and other components required due to interferences, space constraints, code requirements, etc. as required to provide a complete/functional system.

B. The general plumbing requirements are intended to augment the drawings and specifications. Should conflicts occur between the drawings and the specifications, the strictest provision shall govern. Where there are conflicts or differences between the drawings for the various trades, report such conflicts or differences to the ARCHITECT and/or ENGINEER for resolution prior to rough-in.

C. Contractor shall examine the drawings of all other trades in order to verify the conditions governing the work on the job site and arrange their work accordingly, providing all piping, fittings, traps, valves and accessories as may be required to meet such conditions.

D. Deviations from the drawings, with the exception of minor changes in routing and other such incidental changes that do not affect the functioning or serviceability of the systems, shall not be made without the written approval of the ARCHITECT and/or ENGINEER.

E. The architectural and structural drawings take precedence in all matters pertaining to the building structure; plumbing drawings in all matters pertaining to plumbing trades; Mechanical drawings in all matters pertaining to mechanical trades; and electrical drawings in all matters pertaining to electrical trades. Where there are conflicts or differences between the drawings for the various trades, report such conflicts or differences to the ARCHITECT and/or ENGINEER for resolution prior to rough-in.

1.03 COORDINATION OF WORK

A. The Contractor and his Subcontractors shall be responsible for all tasks applicable to their work in accordance with the Specifications, Drawings, and code requirements, and shall be responsible for coordinating locations and arrangements of their work to give best results with all other relevant trades.

1. Coordinate all wall, roof, floor penetrations, equipment pads, etc. with architectural and structural trades.
2. Verify requirements of all equipment with shop drawing submittals prior to installation - notify Architect/Engineer of any conflicts between shop drawings and plans prior to rough-in.
3. Do not route/locate below grade piping below, or with 45 degrees of the bottom corner of, foundation walls/footings. Coordinate with structural trades prior to installing piping. Any piping that crosses through/under foundation walls/footings shall be sleeved within a steel pipe sleeve at least 2” larger than the service pipe.
4. Verify clearance requirements of all mechanical, electrical, plumbing equipment/systems prior to the installation of any new work. Plumbing equipment, piping, systems, etc. shall not interfere with electrical equipment spaces. Electrical conduit and equipment clearances shall not interfere with mechanical/plumbing equipment spaces.

1.04 INSPECTION OF SITE AND PROJECT DOCUMENTATION

A. The CONTRACTOR shall visit the site and examine/verify the conditions under which the work must be conducted before submitting proposal. The CONTRACTOR shall examine the drawings and specifications of all other trades including Mechanical, Architectural, Structural and Electrical.

B. The CONTRACTOR shall notify the ARCHITECT and/or ENGINEER, prior to submitting their bid via Request For Information (RFI), of any potential conflicts/problems that he has identified during his inspection of the site or from the review of plans/specifications. RFIs must be submitted at least 5 working days prior to bid opening.

1.05 GENERAL SUPPORT REQUIREMENTS

A. Provide all necessary angle/brackets, hangers, or supplementary supporting steel as required for adequate support for all piping, and equipment. Secure approval from Architect and/or Structural Engineer, in writing, before welding or bolting to steel framing or anchoring to concrete structure, or cutting/coring thru structural systems

B. Where piping or equipment is supported or suspended from concrete construction, provide approved concrete inserts in formwork to receive hanger rods, such as Unistrut or Powerstrut, and where installed in metal deck, use Ramset or Welds as required.

C. Install plumbing piping systems with adequate anchors, guides, expansion loops, etc. as required to provide for piping expansion/contraction.

1.06 GUARANTEE

A. CONTRACTOR shall guarantee that all labor, materials, and equipment are free from defects and agrees to replace or repair any part of this installation which becomes defective within a period of one year from the date of substantial completion following final acceptance. Acceptance date of substantial completion shall be as determined by the ARCHITECT and/or ENGINEER.

B. The CONTRACTOR shall file with the OWNER any and all guarantees from the equipment manufacturers including the operating conditions and performance capacities they are based on.

1.07 CODES, PERMITS AND FEES

A. Refer to Division 1, General Conditions and Supplementary Conditions.

B. Unless otherwise indicated, all required permits, plan reviews, licenses, inspections, approvals and fees for plumbing work shall be secured and paid for by the CONTRACTOR.

C. All work shall be executed in accordance with the latest enforceable rules and regulations set forth in local and state codes.

1. Plumbing systems shall be installed per current jurisdictional codes (Michigan Mechanical Code, Michigan Plumbing Code, International Fuel Gas Code, etc.), current NFPA codes (NFPA 101, NPFA 90, etc.), and applicable sections of the Michigan Building Code.

D. In the event that the plans and specifications conflict with any rules, regulations, or codes applying, said rules, regulations and codes shall govern.

E. Where the drawings and/or specifications indicate materials or construction in excess of code requirements, the drawings and/or specifications shall govern.

1.08 UTILITIES

A. The CONTRACTOR shall be responsible for coordinating, obtaining new utility services and/or revising existing utility services, and advising the ENGINEER/OWNER, and coordinating with utility company(s) for the natural/propane gas service installations.

B. Rules of local utility companies shall be complied with. The CONTRACTOR shall check with each utility company supplying service to the installation (i.e. water, gas, sewer, storm, etc.) and coordinate service requirements including, but not limited to, all valves, meters, regulators, etc. which will be required. The OWNER shall pay for any “direct” utility charges required for new/revised service including new regulator/meter/etc... Contractor shall provide all other piping, isolation valves, etc…

C. In the event that the plans and specifications conflict with any utility rules, regulations, or codes applying, said utility rules, regulations and codes shall govern.

1.09 SUBSTITUTION ITEMS REQUIRING PRIOR APPROVAL

A. All items that the CONTRACTOR proposes to use in the work that are not specifically named in the contract documents must be submitted for review. Such items must be submitted to the ARCHITECT and/or ENGINEER for approval a minimum of five (5) days prior to bid opening. Requests for prior approval must be accompanied by complete catalog information, including but not limited to, model, size, accessories, complete electrical information and performance data in the form given in the equipment schedule on the drawings at stated design conditions. Where items are referred to by symbolic designations on the drawings, all requests for prior approval shall bear the same designations. The Contractor shall call out/illustrate to the Engineer any/all differences between the basis of design and the Contractor’s proposed substitution items.

1.10 MATERIAL AND EQUIPMENT MANUFACTURERS

A. All items of equipment shall be furnished complete with all accessories normally supplied with the catalog items listed and all other accessories necessary for a complete and satisfactory operating system. All equipment and materials shall be new and shall be standard products of manufacturers regularly engaged in the production of plumbing, heating, ventilating and air conditioning equipment and shall be the manufacturer's latest design.

B. If an approved manufacturer is other than the manufacturer used as the basis for design, the equipment of product provided shall be equal in quality, durability, appearance, capacity and efficiency through all ranges of operation, shall conform with arrangements and space limitations of the equipment shown on the plans and/or specified, shall be compatible with the other

components of the system and shall comply with the requirements for Substitution Items Requiring Prior Approval specified in this Section of the Specifications. All costs to make these items of equipment comply with these requirements including, but not limited to, piping, sheet metal, electrical work, and building alterations shall be included in the original bid.

1.11 OPERATION AND MAINTENANCE INSTRUCTIONAL MANUALS

A. Provide compete maintenance and operating instructional manuals covering all plumbing equipment as specified herein, Division 1 requirements, and individual equipment specification sections.

B. The O&M data shall be bound in a suitable number of 3" or 4", 3-ring, hard cover binders. Permanently imprinted on the cover shall be the words, "Manufacturer's Operation and Maintenance Data", project title, location of project, and the date. A table of contents shall be provided in the front of each binder.

C. Maintenance and operating instructional manuals shall be job specific to this project. Generic manuals are not acceptable. Each piece of equipment in the O&M manual shall be identified as identified on the project drawings (i.e. Generator Primary Gas Regulating Valve, Isolation plug valves, etc.).

D. Internally subdivide the binder contents with permanent page dividers, organized by specification section and/or major equipment/systems (i.e. Plumbing Equipment, Plumbing Fixtures, Plumbing Specialties, etc.).

E. Contents: Each volume of O&M manual shall have three parts:

1. Part 1: A directory listing names, addresses, and telephone numbers of Architect/Engineer, Contractor, Subcontractors, and major equipment suppliers.

2. Part 2: O&M data, arranged and subdivided by major equipment/systems. For each category, identify names, addresses, and telephone numbers of Subcontractors and suppliers:

   a. List of equipment.

   b. Copies of Shop drawings and product data, approved by Architect/Engineer.

   c. Installation and operational procedures.

   d. Routine maintenance procedures.

   e. Trouble shooting procedures.

   f. Complete parts lists by nomenclature, manufacturer's part number and use.

   g. Recommended spare parts lists.

   h. Lubrication chart listing all types of lubricants to be used for each piece of equipment and the recommended frequency of lubrication.

   i. Complete wiring and schematic diagrams.

   j. Elevations and/or sections cut through all of the major equipment and sub-assemblies.

3. Part 3: Project documents and certificates, including the following:

   a. Warranty Certificates.

   b. Copies of approved construction permits.

F. Maintenance and Operating manuals shall be provided, in digital .pdf format, to the ARCHITECT and/or ENGINEER for review when construction is 75% complete.

G. A minimum of two (2) hard copies, as well as digital .pdf format, of all approved Operation and Maintenance literature shall be furnished to the OWNER within 10 days after final inspection. O&M manuals must be completed prior to start of OWNER training as the manuals shall be used as the basis of the training.

1.12 SHOP DRAWINGS/SUBMITTALS

A. Refer to General Conditions and Supplementary General Conditions.

B. All shop drawings shall be submitted in groupings of similar and/or related items. Incomplete submittal groupings will be returned unchecked.

C. Submit fire protection system shop drawings, product data and hydraulic calculations to local authorities having jurisdiction, the OWNER'S insuring agency, and the ARCHITECT and/or ENGINEER for approval prior to fabrication or installation. Submit proof of approval to ARCHITECT and/or ENGINEER.

D. Unless noted otherwise, submit digital (.pdf format) copies of complete manufacturer's shop drawings for all plumbing equipment, valves, specialties, wiring diagrams and control diagrams including, but not limited to the items listed below. Where items are referred to by symbolic designation on the drawings and specifications, all submittals shall bear the same designation. Refer to other Sections of the plumbing specifications for additional requirements.

1) 22 1005 Plumbing Piping:

a. New Generator’s Primary Gas Regulating Valve – refer to drawing P0.1 for Gas Service Header detail with specifics.

b. Gas isolation valves.

1.13 INSTRUCTION OF OWNER PERSONNEL

A. Before final inspection the CONTRACTOR shall instruct OWNER's designated personnel in operation, adjustment and maintenance of plumbing equipment and systems at agreed upon times.

B. For equipment requiring seasonal operation, perform instructions for other seasons within six months.

C. Use Operation and Maintenance Manuals as basis for instruction. Review contents of manual with personnel in detail to explain all aspects of operation and maintenance.

D. Prepare and insert additional data in Operation and Maintenance Manual when need for such data becomes apparent during instruction.

1.14 RECORD DRAWINGS

A. The CONTRACTOR shall keep accurate notes of all deviations from the construction documents and discrepancies of construction on field drawings as they occur. The marked up field documents shall be available for review by the ARCHITECT and/or ENGINEER, and OWNER at their request.

1. Provide accurate record drawings of Under/Ground (U/G) gas piping.

PART 2 PRODUCTS - NOT USED

PART 3 EXECUTION

3.01 INSTALLATION OF EQUIPMENT

A. Install equipment in strict accordance with all directions and recommendations furnished by the manufacturer. Where such directions are in conflict with the drawings and specifications, report

such conflicts to the ARCHITECT and/or ENGINEER for resolution.

3.02 WORK INVOLVING OTHER TRADES

A. Certain items of equipment or materials specified in the Plumbing Division may have to be installed by other trades due to code requirements or union jurisdictional requirements. In such instances, the Contractor shall complete the work through an approved, qualified subcontractor and shall include the full cost for same in his bid.

3.03 COORDINATION

A. Install work to avoid interference with work of other trades including, but not limited to, architectural and electrical trades. Remove and relocate any work that causes an interference at CONTRACTOR's expense. Disputes regarding the cause of an interference shall be resolved by the ARCHITECT and/or ENGINEER.

3.04 CHASE, SHAFTS AND RECESSES

A. Coordinate with structural, architectural and other trades to ensure accurate location and size of chases, shafts and recesses required for plumbing systems/piping.

3.05 SLEEVES

A. Provide and install Schedule 40 black steel pipe sleeves, cut to length, wherever pipes pass through above grade walls and floors. Provide and install galvanized steel pipe sleeves, cut to length, wherever pipes pass through below grade foundation walls and slab on grade floors. Sleeves shall terminate flush with walls in finished areas. All sleeves through the floor are to extend two (2) inches above finish floor.

B. Provide escutcheons at each penetration through walls, floors, and ceilings in exposed areas.

C. Patch sleeves to match building material.

3.06 SEALING OF PLUMBING OPENINGS

A. Seal the space around pipes and sleeves through walls, floors and ceilings.

B. Provide adequate clearance to allow for proper pipe movement and sealing.

C. Provide/install fireproof wall and floor sleeves as required by applicable building codes at all applicable wall, ceiling, and floor penetrations. Refer to Architectural plans for wall assembly ratings.

D. Sleeves placed in floors shall be flush with the underside of the floor construction and shall have planned, square ends, extending 2 inches above the finished floor, unless otherwise noted or detailed.

E. Where sleeves pass through reinforced concrete floors/pads, they shall be properly set in position prior to concrete pouring in such a way that they will be maintained in position until the concrete is set.

F. Pipes passing through below grade perimeter walls or slabs on grade shall have the space between the pipe and sleeve sealed watertight with a mechanically expandable elastomer seal device.

G. Penetrations through fire rated floors and walls shall be fire-stopped in accordance with applicable building code requirements with UL and FMRC approved materials and shall have a fire rating equal to or greater than the fire partition rating. Refer to architectural plans for locations and assembly ratings.

1. Packing: Refractory fiber or ceramic fiber.

a. Manufacturers:

1) Carborundum Fiberfrax.
2) Johns-Manville - Cerafelt.
3) Eagle Picher Epitherm 1200.
4) Babcock and Wilcox Kaowool.

2. Fire stop sealant.
   a. Manufacturers:
      1) Hilti
      2) Tremco
      3) Mameco
      4) Pecora
3. Where combustible pipes, tubes, vents, etc. penetrate a fire rated assembly, such penetrations shall be protected by an approved through-penetration fire stop collar/sealant system per the building code.
   a. Through -penetration firestop systems shall be tested in accordance with ASTM E814 with a minimum positive pressure differential of 0.01 inch WG. Through penetration firestop systems shall have a "F" rating and a "T" rating of not less than 1 hour but not less than the required rating of the assembly penetrated.
   b. Hilti CP 642 Firestop Collar.
   c. Hilti FS-ONE High Performance Intumescent Firestop Sealant.
   d. 3M Fire Barrier PPD Plastic Pipe Device.
   e. 3M Fire Barrier Intumescent Firestop Sealant.

3.07 CUTTING, CORING AND PATCHING

A. Refer to General Conditions.

B. Unless noted otherwise, the CONTRACTOR shall perform all cutting, coring, and patching that may be necessary for the installation of their Work. All cutting, coring, patching and repair work shall be performed by the CONTRACTOR through qualified Subcontractors. CONTRACTOR shall include full cost of same in his bid.

C. Secure approval form Architect and/or Structural Engineer, in writing, before cutting, welding/bolting to, or anchoring from any structural building components (i.e. structural steel, load bearing walls, footings/foundations, concrete floors/ceilings, etc.).

3.08 EXCAVATION AND BACKFILLING

A. Provide all excavation, trenching, tunneling and backfilling required for the plumbing work.

B. Provide foundations if required to support underground piping.

C. Refer to Architectural/Structural specification sections for excavation and backfilling details.

3.09 EQUIPMENT FOUNDATIONS AND SUPPORTS

A. Provide adequate support/foundations for all plumbing equipment and piping.

B. For equipment suspended form ceiling or walls, furnish and install all inserts, rods, structural steel frames, brackets and platforms required. Obtain approval of ARCHITECT and/or ENGINEER for same including loads, locations, and methods of attachment.

3.10 EQUIPMENT/FIXTURE CONNECTIONS

A. Make connections to equipment, fixtures and other items included in the work in accordance with the approved shop drawings and rough-in measurements furnished by the manufactures of the particular equipment furnished.

B. All piping connections to equipment shall be flanged or shall be made with unions to facilitate equipment removal.

C. All piping connections to pumps, and other equipment shall be installed without strain at the pipe connection of this equipment.

D. Brass unions for connections of 2 inch and less and flanged union with dielectric gasket and bolt sleeves for 2-1/2 inch and greater shall be used for equipment connections of dissimilar metals.

3.11 ACCESSIBILITY

A. All equipment shall be installed so as to be readily accessible for operation, maintenance, and repair, as required by the equipment manufacturer and as subject to the approval of the ENGINEER.

3.12 CLEANING

A. Each trade shall be responsible for removing all debris daily as required to maintain the work area in a neat, orderly condition.

B. After equipment and systems have been completed and tested, each entire system shall be cleaned and flushed.

C. Prior to connection of new piping to existing piping systems, all new piping shall be subject to initial flushing, cleaning and final flushing. Provide temporary bypass piping and fittings, temporary valves and strainers, temporary water make-up piping with approved means of backflow prevention, and temporary pumps as needed to perform specified flushing and cleaning requirements.

3.13 PAINTING

A. All plumbing systems, equipment, piping, etc. exposed in “finished” areas shall be painted to match the surrounding finishes. Refer to specification section 09900 - Coordinate color with Architect.

B. Nature/Propane gas piping shall be painted per code.

3.14 PROTECTION AND HANDLING OF EQUIPMENT AND MATERIALS

A. Equipment and materials shall be protected from theft, injury or damage.

B. Materials with enamel or glaze surface, shall be protected from damage by covering and/or coating as recommended in bulletin, "Handling and Care of Enameled Cast Iron Plumbing Fixtures," issued by the Plumbing Fixtures Manufacturers Association, and as approved.

C. Coat polished or plated metal parts with white petroleum jelly immediately after installation.

D. Protect equipment outlets, pipe openings with temporary plugs or caps.

E. Provide adequate storage for all equipment and materials delivered to the job site. Equipment set in place in unprotected areas must be provided with temporary protection.

3.15 GENERAL SUPPORT REQUIREMENTS

A. Each trade shall provide all required supporting components to properly support their work. Supporting components/systems shall be in accordance with Code and as specified.

B. Provide all necessary angle/brackets or supplementary steel as required for adequate support

for all piping, ductwork, specialties, and equipment. Secure approval form ARCHITECT and/or Structural ENGINEER, in writing, before welding or bolting to steel framing or anchoring to concrete structure.

C. Where piping, specialties, or equipment is supported or suspended from concrete construction, provide approved concrete inserts in formwork to receive hanger rods, such as Unistrut or Powerstrut, and where installed in metal deck, use Ramset or Welds as required.

3.16 DRAWINGS AND MEASUREMENTS

A. These specifications and accompanying drawings are intended to describe and provide for finished work. They are intended to be cooperative, and what is called for by either the drawings or specifications shall be as binding as if call for by both. The work herein described shall be complete in every detail.

B. The Drawings are not intended to be scaled for rough-in measurements, nor to serve as Shop Drawings. Field measurements necessary for ordering materials and fitting the installation to the building construction and arrangement shall be taken by the Contractor. The Contractor shall check latest architectural drawings to locate equipment/fixtures/etc., check latest structural drawings for interferences, etc.

3.17 PIPING SYSTEMS TESTING

A. Pressure test natural gas and propane gas piping in accordance with governing and applicable codes. At minimum, test with air at 100 PSIG - permissible pressure drop shall be 0 PSIG over 2-hour period.

3.18 DEMOLITION WORK

A. All demolition of existing plumbing equipment and materials shall be done by the Contractor unless otherwise indicated. Included are all items such as, but not limited to, existing piping, pumps, supports and equipment where such items are not required for the proper operation of the modified system.

B. In general, demolition work is indicated on the drawings. However, the Contractor shall visit the job to determine the full extent and character of this work.

C. Unless specifically noted to the contrary, removed materials shall not be reused in the work. Salvaged materials that are to be reused shall be stored safe against damage and turned over to the appropriate trade for reuse. Salvaged materials of value that are not to be reused shall remain the property of the Owner unless such ownership is waived. Remove items from the systems and turn over to the Owner in their condition prior to removal. The Owner shall move and store these materials. Items on which the Owner waives ownership shall become the property of the Contractor, who shall remove and legally dispose of, away from the premises.

D. Work that has been cut or partially removed shall be protected against damage until covered by permanent construction.

E. Clean and flush the interior and exterior of all existing relocated equipment and its related piping, valves, and accessories that are to be reused of all mud, debris, pipe dope, oils, welding slag, loose mill scale, rust and other extraneous material so that the existing equipment and all accessories can be repainted and repaired as required to place in first-class working condition.

F. Where existing equipment is to be removed, cap piping under floor, behind face of wall, above ceiling or at mains.

3.19 WORK IN EXISTING BUILDINGS

A. The Owner will provide access to existing buildings as required. Access requirements to occupied buildings shall be identified on the project schedule. The Contractor, once work is

started in the existing building, shall complete same without interruption so as to return work areas as soon as possible to Owner.

B. Adequately protect and preserve all existing and newly installed work. Promptly repair any damage to same at Contractor's expense.

C. Consult with the ARCHITECT and/or ENGINEER as to the methods of carrying on the work so as not to interfere with the Owner's operation any more than absolutely necessary. Accordingly, all service lines shall be kept in operation as long as possible and the services shall only be interrupted at such time as will be designated by the Architect and/or Owner's Representative.

3.20 EXTRA WORK

A. For any extra work which may be proposed, the Contractor shall furnish to the General Contractor/Construction Manager, an itemized breakdown of the estimated cost of all materials and labor required to complete this work. The estimate cost breakdown shall include unit prices (same prices for increase/decrease of work) for all materials (i.e. duct, piping, valves, equipment, equipment rental, etc.) and all labor (i.e. manhours, overtime, etc.) which may be required for any proposed extra work. The Contractor shall not proceed until receiving a written order from the General Contractor establishing the agreed price and describing the work to be done.

END OF SECTION

SECTION 22 1005

PLUMBING PIPING

PART 1 GENERAL

1.01 SECTION INCLUDES

A. Pipe, pipe fittings, valves, and connections for piping systems.

1. Natural Gas Piping, Valves, etc...

1.02 REFERENCE STANDARDS

A. ASME B16.3 - Malleable Iron Threaded Fittings; The American Society of Mechanical Engineers.

B. ASME B16.18 - Cast Copper Alloy Solder Joint Pressure Fittings; The American Society of Mechanical Engineers (ANSI B16.18).

C. ASME B16.22 - Wrought Copper and Copper Alloy Solder Joint Pressure Fittings; The American Society of Mechanical Engineers.

D. ASME B16.26 - Cast Copper Alloy Fittings for Flared Copper Tubes; The American Society of Mechanical Engineers.

E. ASME B31.1 - Power Piping; The American Society of Mechanical Engineers (ANSI/ASME B31.1).

F. ASME B31.9 - Building Services Piping; The American Society of Mechanical Engineers (ANSI/ASME B31.9).

G. ASME (BPV IV) - Boiler and Pressure Vessel Code, Section IV - Rules for Construction of Heating Boilers; The American Society of Mechanical Engineers.

H. ASTM A 53/A 53M - Standard Specification for Pipe, Steel, Black and Hot-Dipped, Zinc-Coated, Welded and Seamless.

I. ASTM A 234/A 234M - Standard Specification for Piping Fittings of Wrought Carbon Steel and Alloy Steel for Moderate and High Temperature Service.

J. ASTM B 88 - Standard Specification for Seamless Copper Tube.

K. AWS D10.9 - Specifications for Qualification of Welding Procedures and Welders for Piping and Tubing.

L. MSS SP-58 - Pipe Hangers and Supports - Materials, Design and Manufacture; Manufacturers Standardization Society of the Valve and Fittings Industry, Inc..

M. MSS SP-89 - Pipe Hangers and Supports - Fabrication and Installation Practices; Manufacturers Standardization Society of the Valve and Fittings Industry, Inc..

N. MSS SP-110 - Ball Valves Threaded, Socket-Welding, Solder Joint; Manufacturers Standardization Society of the Valve and Fittings Industry, Inc..

O. NFPA 54 - National Fuel Gas Code; National Fire Protection Association.

1.03 SUBMITTALS

A. Project Record Documents: Record actual routing of piping, both above and below grade. Record locations of valves.

1.04 QUALITY ASSURANCE

A. Perform Work in accordance with State of Michigan Code requirements.

B. Perform Work in accordance with National Fuel Gas Code requirements.

C. Valves: Bear UL and FMRC label or marking. Manufacturer's name and pressure rating marked on valve body.

D. Pressure test natural gas/propane gas piping, compressed air piping, vacuum air piping, in accordance with governing and applicable codes. At minimum, test with air at 100 PSIG - permissible pressure drop shall be 0 PSIG over 2 hour period.

1.05 REGULATORY REQUIREMENTS

A. Perform Work in accordance with State and local plumbing and mechanical codes.

1.06 DELIVERY, STORAGE, AND HANDLING

A. Accept valves on site in shipping containers with labeling in place. Inspect for damage.

B. Provide temporary protective coating on cast iron and steel valves.

C. Provide temporary end caps and closures on piping and fittings. Maintain in place until installation.

D. Protect piping systems from entry of foreign materials by temporary covers, completing sections of the work, and isolating parts of completed system.

1.07 FIELD CONDITIONS

A. Do not install underground piping when bedding is wet or frozen.

PART 2 PRODUCTS

2.01 PLUMBING SYSTEM REQUIREMENTS

A. Comply with ASME B31.9 and applicable federal, state, and local regulations.

B. Piping: Provide piping, fittings, hangers and supports as required, as indicated, and as follows:

1. Where more than one piping system material is specified, provide joining fittings that are compatible with piping materials and ensure that the integrity of the system is not jeopardized.
2. Use non-conducting dielectric connections whenever jointing dissimilar metals.
3. Provide pipe hangers and supports in accordance with ASME B31.9 unless indicated otherwise.

C. Pipe-to-Valve and Pipe-to-Equipment Connections: Use flanges, or unions to allow disconnection of components for servicing; do not use direct welded, soldered, or threaded connections.

D. Valves: Provide valves where indicated, and as follows:

1. Isolate equipment using ball valves or plug valves.
2. For shut-off and to isolate parts of systems or vertical risers, use ball, or plug valves.

E. Welding/Brazing/Soldering Materials and Procedures: Conform to ASME (BPV IX).

2.02 NATURAL GAS PIPING (G), BURIED WITHIN 5 FEET OF BUILDING

A. Steel Pipe: ASTM A 53/A 53M Schedule 40 black.

1. Fittings: ASTM A 234/A 234M, wrought steel welding type.
2. Joints: ASME B31.1, welded.
3. Jacket: AWWA C105/A21.5 polyethylene jacket or double layer, half-lapped 10 mil polyethylene tape.

B. Thickwall/Rigid HDPE tubing, certified/listed for natural gas service.

C. For sizes 3” and less: Soft Copper Tubing: ASTM B88, seamless and jointless soft copper tubing may be used for sizes 2 inch and smaller. No solder joints shall be permitted on below grade copper tubing.

D. For sizes 2" and less: Seemless run of Pre-sleeved stainless steel flexible gas pipe with fully ventable polyethylene sleeve may be used where allowed by code.

1. Manufacturer: OmegaFlex "TracPipe PS-2".

E. Minimum System Pressure Rating: 100 psig.

2.03 NATURAL GAS PIPING (G), ABOVE GRADE

A. Steel Pipe: ASTM A 53/A 53M Schedule 40 black.

1. Fittings: ASME B16.3, malleable iron, or ASTM A 234/A 234M, wrought steel welding type.
2. Joints: NFPA 54, threaded (for pipe sizes 1” or less) or welded to ASME B31.1 (for pipe sizes 1-1/4” and larger).

B. Corrugated Stainless Steel Tubing (CSST): ASTM A240, type 304 stainless steel with a minimum nominal wall thickness of 0.010 inches. System shall comply with ANSI LC-1 "Standard for Fuel Gas Piping Using Corrugated Stainless Steel Tubing (CSST), and carrying listings by CSA International (Certification Number 1009875), ICC Evaluation Services (Report Number ESR-1031) and IAPMO Research & Testing (Certificate of Listing Number 3250).

1. Fittings: Corrugated stainless steel tube fittings: Mechanical tube fittings manufactured from ASTM B16 type 360 brass whose design incorporates a double wall flare for gas-tight seal with mechanical capture of the jacket for enhanced tubing protection. Include ends with threads according to ASME B1.20.1 for connection to threaded pipe or fittings.
2. Protective Coating: Furnish corrugated stainless steel tubing with factory-applied corrosion -resistant polyethylene jacket for use in corrosive atmosphere. Coating properties include the following:
   a. Corrugated stainless steel tube jacket shall be UV-Resistant polyethylene meeting the requirements of ASTM E84 for flame spread and smoke density.
3. Low pressure, 0.5 psig (14 inch Water Column) or less, Natural Gas Systems: Use the following :
   a. 1/2 to 2-inch NPS: CSST and brass fittings.
4. Medium pressure, over 0.5 psig (14 inch Water Column = W.C.) up to 5 psig, Natural Gas Systems: Use the following:
   a. 1/2 to 2-inch NPS: CSST and brass fittings.

C. Isolation Valves: AGA approved and UL listed ball valves for sizes 3 inch and smaller and AGA/UL listed lubricated plug valves for sizes 4 inches and larger.

D. Minimum System Pressure Rating: 100 psig.

2.04 FLANGES, UNIONS, AND COUPLINGS

A. Unions for Pipe Sizes 2 inches and Under:

1. Ferrous pipe: Class 150 malleable iron threaded unions.
2. Copper tube and pipe: Class 150 bronze unions with soldered joints.

B. Flanges for Pipe Size Over 2 inches:

1. Ferrous pipe: Class 150 malleable iron threaded or forged steel slip-on flanges; preformed neoprene gaskets.
2. Copper tube and pipe: Class 150 slip-on bronze flanges; preformed neoprene gaskets.

C. Dielectric Connections: Union or fitting with galvanized or plated steel threaded end, copper solder end, water impervious isolation barrier.

2.05 PIPE HANGERS AND SUPPORTS

A. Plumbing Piping - Gas:

1. Conform to MSS SP-58.
2. Hangers for Pipe Sizes 1/2 Inch to 1-1/2 Inches: Carbon steel, adjustable swivel, split ring.
3. Hangers for Pipe Sizes 2 Inches and Over: Carbon steel, adjustable, clevis.
4. Multiple or Trapeze Hangers: Steel channels with welded spacers and hanger rods.
5. Wall Support for Pipe Sizes to 3 Inches: Cast iron hook.
6. Wall Support for Pipe Sizes 4 Inches and Over: Welded steel bracket and wrought steel clamp.
7. Vertical Support: Steel riser clamp.
8. Floor Support: Cast iron adjustable pipe saddle, lock nut, nipple, floor flange, and concrete pier or steel support.
9. Copper Pipe Support: Carbon steel ring, adjustable, copper plated.
10. Support gas piping on roof with Miro gas piping supports. Coordinate roof pad requirements with roofing trades.

B. Hanger Fasteners: Attach hangers to structure using appropriate fasteners, as follows:

1. Concrete Wedge Expansion Anchors: Complying with ICC-ES AC193.
2. Masonry Wedge Expansion Anchors: Complying with ICC-ES AC01.
3. Concrete Screw Type Anchors: Complying with ICC-ES AC193.
4. Masonry Screw Type Anchors: Complying with ICC-ES AC106.
5. Concrete Adhesive Type Anchors: Complying with ICC-ES AC308.

2.06 BALL VALVES

A. Manufacturers:

1. Conbraco Industries: www.conbraco.com.
2. Nibco, Inc.: www.nibco.com.
3. Milwaukee Valve Company: www.milwaukeevalve.com.

B. Construction, 2 Inches and Smaller: 300 psi CWP, forged brass two piece body, chrome plated brass ball and stem, regular port, TFE seats and seals, blow-out proof stem, lever handle.

C. Construction, 4 Inches and Smaller: MSS SP-110, Class 150, 400 psi CWP, bronze, two piece body, chrome plated brass ball, regular port, teflon seats and stuffing box ring, blow-out proof stem, lever handle with balancing stops, solder or threaded ends with union.

D. Ball valves for natural gas service shall be AGA & UL labeled for gas service.

2.07 PLUG VALVES

A. Manufacturers:

1. Conbraco Industries.
2. Nibco, Inc.
3. Milwaukee Valve Company.

B. Construction 2-1/2 Inches and Larger: MSS SP-78, 175 psi CWP, cast iron body and plug, pressure lubricated, teflon or Buna N packing, flanged ends. Provide lever operator with set screw.

2.08 GAS PRESSURE REGULATING VALVES

A. Manufacturers:

1. Sensus.
2. Fisher.
3. Maxitrol.
4. Norgas.
5. Iton.

B. ProvidenNew Primary Gas Regulating Valve for the new Generator (3,200 CFH @ 7” – 11” WC):

1. Direct Acting / Internal Register type gas pressure regulator.
2. Lockup / Hard shut off feature.
3. Inlet pressure = 14” W.C. at gas Utility service.
4. Outlet pressure = 9” W.C.
5. Sized for 150% of max running load of 3,200 x 1.5 = 4,800 CFH with no more than 2” W.C. pressure drop at no load – full load run conditions.
6. Refer to Generac Generator installation requirements, which is issued for reference with these specifications.
7. Reger to Generac Natural Gas Supply System Design Guide – 10000046207, which is issued for reference with these specifications.
   a. Provide minimum of 11 feet of gas header between Primary Gas Regulating Valve for the new Generator and gas connection (flexible Stainless Steel pipe connector).
   b. Provide dirt legs near primary gas regulator and generator connection.
   c. Provide isolation valve upstream of primary gas regulator valve.
   d. Etc…

PART 3 EXECUTION

3.01 EXAMINATION

A. Verify that excavations are to required grade, dry, and not over-excavated.

3.02 PREPARATION

A. Ream pipe and tube ends. Remove burrs. Bevel plain end ferrous pipe.

B. Remove scale and dirt, on inside and outside, before assembly.

C. Prepare piping connections to equipment with flanges or unions.

3.03 INSTALLATION

A. Install in accordance with manufacturer's instructions.

B. Provide non-conducting dielectric connections wherever jointing dissimilar metals.

C. Route piping in orderly manner and maintain gradient. Route parallel and perpendicular to walls.

D. Install piping to maintain headroom, conserve space, and not interfere with use of space.

E. Install piping to allow for expansion and contraction without stressing pipe, joints, or connected equipment.

F. Provide clearance in hangers and from structure and other equipment for installation of insulation and access to valves and fittings.

G. Provide support for utility regulators/meters in accordance with requirements of utility companies.

H. Prepare exposed, unfinished pipe, fittings, supports, and accessories ready for finish painting in “finished” areas. Refer to Section 09 9000.

I. Pipe vents from gas pressure regulating/reducing valves to outdoors and terminate in weather proof hood.

J. Gas piping shall be painted per specification section 09900 and mechanical/building code requirements.

K. Sleeve and vent gas piping that is concealed or buried below building slab per fuel gas code requirements.

L. Sleeve pipes passing through partitions, walls and floors.

M. Each fixture/equipment shall have isolation valves provided. All isolation valves shall be located in accessible locations.

N. Do not route/locate below grade piping below, or with 45 degrees of the bottom corner of, foundation walls/footings. Coordinate with structural trades prior to installing piping.

O. Pipe Hangers and Supports:

1. Install in accordance with MSS SP-89.
2. Support horizontal piping as scheduled.
3. Install hangers to provide minimum 1/2 inch space between finished covering and adjacent work.
4. Place hangers within 12 inches of each horizontal elbow.
5. Use hangers with 1-1/2 inch minimum vertical adjustment. Design hangers for pipe

movement without disengagement of supported pipe.

6. Support vertical piping at every floor. Support riser piping independently of connected horizontal piping.
7. Where several pipes can be installed in parallel and at same elevation, provide multiple or trapeze hangers.
8. Provide copper plated hangers and supports for copper piping.
9. Prime coat exposed steel hangers and supports. Refer to Section 09 9000. Hangers and supports located in crawl spaces, pipe shafts, and suspended ceiling spaces are not considered exposed.
10. Roof mounted gas piping shall be supported by Polycarbonate pipe supports.
    a. Miro Industries, Inc. Model 1.5, 3-R-2, 3-R-4, 4-R, 5-R, or as required for sizes 6" and up.
    b. Pipe supports shall be placed on top of polycarbonate support pads or additional pad of roof material.

3.04 APPLICATION

A. Install unions downstream of valves and at equipment or apparatus connections.

B. Install ball, or plug, or butterfly valves for shut-off and to isolate equipment, part of systems, or vertical risers.

C. Provide lockable type plug valves in natural gas systems for shut-off service.

3.05 SERVICE CONNECTIONS

A. BASE BID: Provide new gas service complete with gas meter (by Gas Utility) and service regulators (by Gas Utility), or modifications to existing gas service as required to accommodate the gas system improvements. Gas service distribution piping to have initial minimum pressure of 14 inch wg. Coordinate flow and pressure requirements with gas utility.

B. ALTERNATE ADD #2 BID: Provide revisions/upgrade to existing BOECC building's gas service by the boiler room complete with new gas meter (by Gas Utility) and service regulators (by Gas Utility), as required to accommodate the gas system improvements. Gas service distribution piping to have initial minimum pressure of 14 inch wg. Coordinate flow and pressure requirements with gas utility. Provide gas pressure regulators on each line serving gravity type/low pressure appliances, sized in accordance with equipment, when connected to elevated gas pressure (above 0.5" PSIG = 14.5" W.C.).

C. Plumbing Contractor (P.C.) shall provide/install Primary Gas Regulator for new Generator – refer to plans for specifics (e.g. Direct Acting type, flow & pressure requirements, etc..).

3.08 SCHEDULES

A. Pipe Hanger Spacing:

1. Metal Piping:
    a. Pipe size: 1/2 inches to 1-1/4 inches:
        1) Maximum hanger spacing: 6.5 ft.
        2) Hanger rod diameter: 3/8 inches.
    b. Pipe size: 1-1/2 inches to 2 inches:
        1) Maximum hanger spacing: 10 ft.

2) Hanger rod diameter: 3/8 inch.

c. Pipe size: 2-1/2 inches to 3 inches:

1) Maximum hanger spacing: 10 ft.

2) Hanger rod diameter: 1/2 inch.

d. Pipe size: 4 inches to 6 inches:

1) Maximum hanger spacing: 10 ft.

2) Hanger rod diameter: 5/8 inch.

e. Pipe size: 8 inches to 12 inches:

1) Maximum hanger spacing: 14 ft.

2) Hanger rod diameter: 7/8 inch.

END OF SECTION

SECTION 26 0001

GENERAL ELECTRICAL REQUIREMENTS

PART 1 GENERAL

1.01 DESCRIPTION OF WORK

A. This Division includes all labor, materials, equipment, tools, supervision, start-up services, Owner's Instructions, including all incidental and related items necessary to complete installation and successfully test and start up and operate the Electrical Systems indicated on Drawings and described in each Section of Division 26 Specifications, and conforming with ALL other Contract Documents.

B. The Drawings and General Provisions of the Contract, including the General Conditions, Supplementary General Conditions, and Division 1 specification sections, apply to work of Division 26 sections. The items in this section are not intended to supersede, but are supplementary to, the requirements set forth in other Divisions of the specifications.

C. The Contractor, and their Subcontractors and Suppliers, shall include in their bid all materials, labor, and equipment involved, in accordance with all local customs, codes, rules, regulations; and secure compliance of all parts of the Specifications and Drawings regardless of Sectional inclusion in these Specifications.

D. The Contractor shall be held responsible for the complete and satisfactory accomplishment of all Work inclusive of whatever miscellaneous material and/or appurtenances are required to perfect the installation, and demonstrate that all electrical systems will operate satisfactorily under normal operating conditions.

1.02 DRAWINGS & SPECIFICATIONS

A. The drawings are diagrammatic and show the general location and arrangement of equipment, outlets, lights and related electrical items. They shall be followed as closely as elements of the construction will permit. The Contractor shall provide/install all electrical systems, and associated equipment, complete and include all necessary wire/conduit, pull boxes, and other components required due to interferences, space constraints, code requirements, etc. as required to provide a complete/functional system.

B. These General Electrical Requirements are intended to augment the drawings and specifications. Should conflicts occur between the drawings and the specifications, the strictest provision shall govern. Where there are conflicts or differences between the drawings for the various trades, report such conflicts or differences to the Architect and/or Engineer for resolution prior to rough-in.

C. The Contractor shall examine the drawings of all other trades in order to verify the conditions governing the work on the job site. Arrange work accordingly, providing all wiring, conduit, fittings, boxes, etc. as may be required to meet such conditions.

D. Deviations from the drawings, with the exception of minor changes in routing and other such incidental changes that do not affect the functioning or serviceability of the systems, shall not be made without the written approval of the Architect and/or Engineer.

1.03 COORDINATION OF WORK

A. The Contractor shall verify clearance requirements of all electrical and mechanical equipment/systems prior to the installation of any new work. Electrical equipment, wiring, systems, etc. shall not interfere with mechanical equipment spaces.

B. The Contractor, and his Subcontractors, shall be responsible for all tasks applicable to their work in accordance with the Specifications, Drawings, and code requirements, and shall be responsible for coordinating locations and arrangements of their work to give best results with all other relevant trades.

1. Coordinate all wall, roof, floor penetrations, equipment pads, equipment locations, system routings, etc. with architectural and structural trades.
2. Verify requirements of all equipment with shop drawing submittals prior to installation - notify Architect/Engineer of any conflicts between shop drawings and plans prior to rough-in.
3. Coordinate rough-in locations of control devices (i.e. Remote Annunciator, ATS Remote Annunciator, Emergency Stop Switch, etc.) with Owner prior to rough-in. E.C shall provide rough-in of J-box and/or conduit pathway from box to unit's control box.
4. Do not route/locate below grade piping below, or with 45 degrees of the bottom corner of, foundation walls/footings. Coordinate with structural trades prior to installing piping. Any piping that crosses through/under foundation walls/footings shall be sleeved within a steel pipe sleeve at least 2” larger than the service pipe.
5. Verify clearance requirements of all mechanical, electrical, plumbing equipment/systems prior to the installation of any new work. Electrical equipment, lighting, conduit, systems, etc. shall not interfere with mechanical equipment spaces. Mechanical/plumbing equipment, piping, ductwork, systems, etc. shall not interfere with electrical equipment spaces.

1.04 INSPECTION OF SITE AND PROJECT DOCUMENTATION

A. The Contractor shall visit the site and examine/verify the conditions under which the work must be conducted before submitting proposal. The Contractor shall examine the drawings and specifications of all other trades including Mechanical, Architectural, Structural, Plumbing, and Electrical.

B. The Contractor shall notify the Architect and/or Engineer, via written RFI prior to submitting his bid, of any potential conflicts/problems with the plans that he has identified during his inspection of the site and/or from the review of plans/specifications. RFIs must be submitted at least 5 working days prior to bid opening.

1.05 GENERAL SUPPORT REQUIREMENTS

A. Provide all necessary angle/brackets or supplementary steel as required for adequate support for all conduit, lighting, specialties, and equipment. Secure approval form Architect and/or Structural Engineer, in writing, before welding or bolting to steel framing or anchoring to concrete structure, or cutting/coring thru structural systems.

B. Where conduit or equipment is supported or suspended from concrete construction, provide approved concrete inserts in formwork to receive hanger rods, such as Unistrut or Powerstrut, and where installed in metal deck, use Ramset or Welds as required.

1.06 GUARANTEE

A. Contractor shall guarantee that all labor, materials, and equipment are free from defects and agrees to replace or repair any part of this installation which becomes defective within a period of one year from the date of substantial completion following final acceptance, provided that such failure is due to defects in the equipment, material or installation. Acceptance date of substantial completion shall be Owner occupancy as determined by the Architect and/or Engineer.

B. The Contractor shall file with the Owner one set of guarantees from the equipment manufacturers including the operating conditions and performance capacities they are based on.

1.07 CODES, PERMITS AND FEES

A. Refer to Division 1, General Requirements and Supplementary Conditions.

B. Unless otherwise indicated, all required permits, plan reviews, licenses, inspections, approvals and fees for electrical work shall be secured and paid for by the Contractor.

C. All work shall be executed in accordance with the latest enforceable rules and regulations set forth in local and state codes.

1. Electrical systems shall be installed per current jurisdictional codes (Michigan Electrical Code, Michigan Energy Code, etc.), current NFPA codes (NFPA 101, NPFA 90, NFPA 72, etc.), and applicable sections of the Michigan Building Code.

D. In the event that the plans and specifications conflict with any rules, regulations, or codes applying, said rules, regulations and codes shall govern.

E. Where the drawings and/or specifications indicate materials or construction in excess of code requirements, the drawings and/or specifications shall govern.

F. Contractor shall prepare/submit any detailed drawings or diagrams which may be required by the governing authorities & submit to AHJ for plan review/permit approval.

1.08 SUBSTITUTION ITEMS REQUIRING PRIOR APPROVAL

A. All items that the Contractor proposes to use in the work, that are not specifically named in the contract documents, must be submitted for review/approval. Such items must be submitted in .pdf format to the Architect and/or Engineer for approval a minimum of seven (7) days prior to bid opening. Requests for prior approval must be accompanied by complete catalog information, including but not limited to, model, size, accessories, complete electrical information and performance data in the form given in the equipment schedule on the drawings at stated design conditions. Where items are referred to by symbolic designations on the drawings, all requests for prior approval shall bear the same designations. The Contractor shall call out/illustrate to the Engineer any/all differences between the basis of design and the Contractor's proposed substitution items.

1.09 MATERIAL AND EQUIPMENT MANUFACTURERS

A. All items of equipment shall be furnished complete with all accessories normally supplied with the catalog items listed and all other accessories necessary for a complete and satisfactory operating system. All equipment and materials shall be new and shall be standard products of manufacturers regularly engaged in the production of electrical equipment and shall be the manufacturer's latest design.

B. If equipment by an approved manufacture is other than the equipment specified as the basis of design the substituted equipment shall be equal in quality, durability, appearance, capacity and efficiency through all ranges of operation, shall conform with arrangements and space limitations of the equipment shown on the plans and/or specified, shall be compatible with the other components of the system and shall comply with the requirements for Substitution Items Requiring Prior Approval specified in this Section of the Specifications. All costs to make these items of equipment comply with original requirements including, but not limited to, conduit, wiring, bus work, enclosures, and building alterations shall be included in the original bid.

1.10 SHOP DRAWINGS

A. Refer to Division 1, General Requirements.

B. All shop drawings shall be submitted in groupings by specification section (i.e. 262416-Panelboards, 262726-Wiring Devices, etc.) and of similar and/or related items. Incomplete submittal groupings will be returned unchecked.

C. Unless noted otherwise, submit electronically in digital .pdf form, copies of complete manufacturer's shop drawings for all electrical equipment, or systems, including but not limited to, the items listed below. Where items are referred to by symbolic designation on the drawings and specifications, all submittals shall bear the same designation. Refer to other Sections of the electrical specifications for additional requirements.

1. 26 2416 Panelboards: New “MDP” & New “DPA”.

1.11 OPERATION AND MAINTENANCE INSTRUCTIONAL MANUALS

A. Refer to Division 1, General Requirements.

B. Provide compete maintenance and operating instructional manuals covering all electrical equipment as specified herein, and individual equipment specification sections.

C. The O&M data shall be bound in a suitable number of 3" or 4", 3-ring, hard cover binders. Permanently imprinted on the cover shall be the words, "Manufacturer's Operation and Maintenance Data", project title, location of project, and the date. A table of contents shall be provided in the front of each binder.

D. Maintenance and operating instructional manuals shall be job specific to this project. Generic manuals are not acceptable. Each piece of equipment in the O&M manual shall be identified as identified on the project drawings (i.e. Main Distribution Panel “MDP”, 263213-Generator, 263623-Automatic Transfer Switch (ATS), etc.).

E. Internally subdivide the binder contents with permanent page dividers, organized by specification section and/or major equipment/systems (i.e. Main Distribution Panel “MDP”, 263213-Generator, 263623-Automatic Transfer Switch (ATS), etc.).

F. Contents: Each volume of O&M manual shall have three parts:

1. Part 1: A directory listing names, addresses, and telephone numbers of Architect/Engineer, Contractor, Subcontractors, and major equipment suppliers.

2. Part 2: O&M data, arranged and subdivided by major equipment/systems. For each category, identify names, addresses, and telephone numbers of Subcontractors and suppliers:

   a. List of equipment.

   b. Copies of Shop drawings and product data, approved by Architect/Engineer.

   c. Installation and operational procedures.

   d. Routine maintenance procedures.

   e. Trouble shooting procedures.

   f. Complete parts lists by nomenclature, manufacturer's part number and use.

   g. Recommended spare parts lists.

   h. Lubrication chart listing all types of lubricants to be used for each piece of equipment and the recommended frequency of lubrication.

   i. Complete wiring and schematic diagrams.

   j. Elevations and/or sections cut through all of the major equipment and sub-assemblies.

3. Part 3: Project documents and certificates, including the following:

   a. Warranty certificates.

   b. Copies of approved construction permits.

c. Contractor's and equipment manufacturer's telephone numbers for warranty repair services.

G. Two (2) Maintenance and Operating manuals shall be provided, in digital .pdf format, to the Architect and/or Engineer for review when construction is 75% complete.

H. A minimum of two (2) hard copies, as well as digital .pdf format, of all approved Operation and Maintenance literature shall be furnished to the Owner within 10 days after final inspection. O&M manuals must be completed prior to start of Owner training as the manuals shall be used as the basis of the training.

1.12 INSTRUCTION OF OWNER PERSONNEL

A. Before final inspection the Contractor shall instruct Owner's designated personnel in operation, adjustment and maintenance of electrical equipment and systems at agreed upon times.

B. For equipment requiring seasonal operation, perform instructions for other seasons within six months.

C. Use Operation and Maintenance Manuals as basis for instruction. Review contents of manual with personnel in detail to explain all aspects of operation and maintenance.

D. Prepare and insert additional data in Operation and Maintenance Manual when need for such data becomes apparent during instruction.

1.13 RECORD DRAWINGS

A. Contractor shall submit to the Architect and/or Engineer, record drawings which have been neatly marked to represent as-built conditions for all new electrical work.

B. The Contractor shall keep accurate note of all deviations from the construction documents and discrepancies in the concealed conditions and other items of construction on field drawings as they occur. Proper circuiting, conduit runs, location and number of electrical devices shall be indicated on the "as-built" drawings. The marked up field documents shall be available for review by the Architect, Engineer and Owner at their request.

1.14 UTILITIES

A. The Contractor shall be responsible for coordinating, obtaining service, revising/upgrading existing services, and advising the Owner/Architect/Engineer & Utility Company(s) for the electrical (Consumers Energy) utility.

B. Rules of local utility companies shall be complied with. The Contractor shall check with each utility company supplying service to the installation (i.e. power, telecom, etc.) and coordinate service requirements including, but not limited to, all transformers, meter boxes and meters which will be required.

C. The Owner shall pay for any direct utility costs directly to the utility to be pulled in the Owner’s name. The Contractor shall assist with coordinating the new and/or revise/upgraded Electrical Utility service and also provide for all installation costs in his bid including, but not limited to, conduit, transformer pads, mounting the CT/Meter, etc.

D. In the event that the plans and specifications conflict with any utility rules applying, said utility rules and regulations shall govern.

PART 2 PRODUCTS

2.01 MATERIALS

A. All material and equipment furnished and installed by the Contractor for the permanent Work shall be new, unused, of the best quality of make specified, shall be free from defects of any

character, and shall be listed as approved by the UL and/or FM.

B. Outdoor electrical equipment shall be weatherproof, NEMA 3R or NEMA 4X (stainless steel), unless otherwise indicated.

C. Unless otherwise specified in other Division 26 sections, the sheet metal surfaces of equipment enclosures shall be coated with a rust resisting primer. Over the primer, a corrosion resistant baked enamel finish shall be applied. The color shall be ASA No. 49, medium light gray.

PART 3 EXECUTION

3.01 INSTALLATION OF EQUIPMENT

A. Install equipment in strict accordance with all directions and recommendations furnished by the manufacturer. Where such directions are in conflict with the drawings and specifications, report such conflicts to the Architect and/or Engineer for resolution.

3.02 CHASE, SHAFTS AND RECESSES

A. Coordinate with architectural and other trades to ensure accurate location and size of chases, shafts and recesses.

3.03 CUTTING, CORING AND PATCHING

A. Refer to General Conditions.

B. The Contractor shall perform all cutting, coring, and patching that may be necessary for the installation of their Work. All cutting, coring, patching and repair work shall be performed by the Contractor through qualified Subcontractors. Contractor shall include full cost of same in his bid.

C. Secure approval form Architect and/or Structural Engineer, in writing, before cutting, welding/bolting to, or anchoring from any structural building components (i.e. structural steel, load bearing walls, footings/foundations, concrete floors/ceilings, etc.).

3.04 EXCAVATION AND BACKFILLING

A. Provide all excavation, trenching, tunneling and backfilling required for the electrical work.

B. Where conduit is installed less than 2'6" below the surface of pavement, provide concrete encasement, 4" minimum coverage, all around or as shown on the electrical drawings.

C. Install warning tape and cable tracer for all buried circuits.

D. Refer to Architectural, Structural, and Site/Civil Specification sections for excavation and backfilling details.

3.05 EQUIPMENT FOUNDATIONS AND SUPPORTS

A. Provide concrete housekeeping pads for all floor/grade mounted electrical equipment in the size/configuration needed for proper mounting per manufacturer’s installation recommendations/requirements.

B. For equipment suspended from ceiling or walls, furnish and install all inserts, rods, structural steel frames, brackets and platforms required. Obtain approval of Architect and/or Structural Engineer for same including loads, locations, and methods of attachment.

3.06 SLEEVES

A. Provide and install Schedule 40 black steel pipe sleeves, cut to length, wherever conduits pass through above grade walls and floors. Provide and install galvanized steel pipe sleeves, cut to length, wherever conduits pass through below grade foundation walls and slab on grade floors. Sleeves shall terminate flush with walls in finished areas. All sleeves through the floor are to extend two (2) inches above finish floor.

B. Provide escutcheons at each penetration through walls, floors, and ceilings in exposed areas.

C. Patch sleeves to match building material.

3.07 SEALING OF ELECTRICAL OPENINGS

A. Seal the space around conduits in sleeves through walls, floors and ceilings.

B. Refer to specification 078400-Firestopping.

C. Provide adequate clearance to allow for proper sealing.

D. Provide/install fireproof wall and floor sleeves as required at all applicable wall, ceiling, and floor penetrations. Refer to Architectural plans for wall assembly ratings.

E. Sleeves placed in floors shall be flush with the underside of the floor construction and shall have planned, square ends, extending 2 inches above the finished floor, unless otherwise noted or detailed.

F. Where sleeves pass through reinforced concrete floors, they shall be properly set in position prior to concrete pouring in such a way that they will be maintained in position until the concrete is set.

G. Conduits passing through below grade perimeter walls or slabs on grade shall have the space between the pipe and sleeve sealed watertight with a mechanically expandable elastomer seal device.

3.08 FIRESTOP MATERIALS

A. Refer to specification 078400-Firestopping.

B. Use only firestop products that have been tested according to ASTM E-814 and UL 1479 for the conditions set forth regarding construction assembly type, penetrating item type, annular space requirements and fire rating.

C. Install conduit to preserve fire resistance rating of partitions and other elements, using materials and methods specified in other related specification sections.

1. For non-combustible penetrations including conduit not passing through a sleeve, the following materials are acceptable:

   a. Hilti FS 601 Elastmeric Firestop Sealant.

   b. 3 M.

   c. CSD Sealing Systems.

   d. Firestop Systems.

2. For non-combustible penetrations including sleeved conduits, the following materials are acceptable:

   a. Hilti FS 601 Elastmeric Firestop Sealant.

   b. 3 M.

   c. CSD Sealing Systems.

   d. Firestop Systems.

3. For combustible penetrations including cables and cable bundles, the following materials are acceptable:

   a. Hilti FS 611A Intumescent Firestop Sealant.

b. 3 M.

c. CSD Sealing Systems.

d. Firestop Systems.

4. For large or complex penetrations involving multiple conduits, cable trays, electrical bussway, etc. the following materials are acceptable:

a. Hilti FS 635 Firestop Compound.

b. 3 M.

c. CSD Sealing Systems.

d. International Protective Coatings - KBS Sealbags.

3.09 EQUIPMENT CONNECTIONS

A. Make connections to equipment, fixtures and other items included in the work in accordance with the approved shop drawings and rough-in measurements furnished by the manufactures of the particular equipment furnished. All additional connections not shown on the drawings, but called out by the equipment manufacturer's shop drawings, shall be provided at no additional cost.

3.10 CLEANING

A. Each Trade shall be responsible for removing all debris daily as required to maintain the work area in a neat, orderly condition.

B. Final cleanup shall include, but not be limited to, washing of fixture lenses or louvers, switchboards, substations, motor control centers, panels, etc. Fixture reflectors and lenses or louvers shall be left with no water marks or cleaning streaks.

3.11 HAZARDOUS/CLASSIFIED LOCATIONS

A. Explosion-Proof Rated Areas: All electrical systems (i.e. conduit, fittings, circuits, devices, equipment, etc.) installed in classified areas shall be installed as required by NEC and applicable NFPA rules. Sealing fittings shall be properly installed at all required locations in accordance with code regulations. Automatic drain conduit seals shall be used wherever necessary to ensure the prevention of moisture accumulation. Approved breathers shall be installed in appropriate locations.

3.12 PAINTING

A. All electrical systems, equipment, conduit, etc. exposed in finished areas shall be painted to match the surrounding finishes. Refer to specification section 09900 - Coordinate color with Architect

3.13 PROTECTION AND HANDLING OF EQUIPMENT AND MATERIALS

A. Equipment and materials shall be protected from theft, injury or damage.

B. Protect equipment outlets, pipe and duct openings with temporary plugs or caps.

C. Provide adequate storage for all equipment and materials delivered to the job site. Equipment set in place in unprotected areas must be provided with temporary protection.

3.14 ACCESSIBILITY

A. All equipment shall be installed so as to be readily accessible for operation, maintenance, and repair, as required by the equipment manufacturer and as subject to the approval of the Engineer.

3.15 NAMEPLATES AND DIRECTORIES

A. Identify switchgear, unit substations, panelboards, safety switches, etc., with manufacturer's nameplate, shop order, where applicable on composite assemblies, and designations used on the Drawings. Nameplates shall be laminated phenolic plastic, beveled edged white with engraved black letters. Except where impractical, letter and numerals shall be a minimum of 1/2 inch high. Nameplates shall be mechanically secured. Pressure sensitive nameplates are not acceptable. Panel directories shall be neatly typed, showing equipment served and location for each breaker or switch with a clear plastic protective cover.

3.16 EXTRA WORK

A. Refer to Division 1, General Requirements.

B. For any extra electrical work which may be proposed, the Electrical Contractor shall furnish to the General Contractor/Construction Manager, an itemized breakdown of the estimated cost of all materials and labor required to complete this work. The estimate cost breakdown shall include unit prices (same prices for increase/decrease of work) for all materials (i.e. wire, conduit, devices, equipment, equipment rental, etc.) and all labor (i.e. manhours, overtime, etc.) which may be required for any proposed extra work. The Contractor shall not proceed until receiving a written order from the General Contractor establishing the agreed price and describing the work to be done.

3.17 DRAWINGS AND MEASUREMENTS

A. These specifications and accompanying drawings are intended to describe and provide for finished work. They are intended to be cooperative, and what is called for by either the drawings or specifications shall be as binding as if call for by both. The work herein described shall be complete in every detail.

B. The Drawings are not intended to be scaled for rough-in measurements, nor to serve as Shop Drawings. Field measurements necessary for ordering materials and fitting the installation to the building construction and arrangement shall be taken by the Contractor. The Contractor shall check latest architectural drawings to locate light switches, check latest structural drawings for interferences, etc.

3.18 DEMOLITION AND REMOVAL WORK

A. All demolition of existing electrical equipment and materials shall be done by the Contractor unless otherwise indicated.

B. In general, demolition work is indicated on the drawings. However, the Contractor shall visit the job to determine the full extent and character of this work.

C. The Contractor shall review all other contract documents (i.e. architectural plans, mechanical plans, etc.) to review the extent of demolition and remodeling work.

D. Unless specifically noted, removed materials shall not be reused in the work. Salvaged materials that are to be reused shall be stored safe against damage and turned over to the appropriate trade for reuse. Salvaged materials of value that are not to be reused shall remain the property of the Owner unless such ownership is waived. Remove items from the systems and turn over to the Owner unless such ownership is waived. Items on which the Owner waives ownership shall become the property of the Contractor, who shall remove and legally dispose of same, away from the premises. Properly dispose of lighting fixture lamps and ballasts.

E. Work that has been cut or partially removed shall be protected against damage until covered by permanent construction.

F. Where equipment or fixtures are removed, wire shall be removed, outlets shall be properly blanked off, and conduits capped. After alterations are done, the entire installation shall present

a "finished" look, as approved by the Architect and/or Engineer. The original function of the existing electrical work to be modified shall not be changed unless required by the specific revisions shown on the drawings.

G. The Contractor is required to maintain service by rerouting wiring for power and lights as necessary. Where walls and ceilings are to be removed as shown on the drawings, the conduit is to be cut off by the Electrical Trades so that the abandoned conduit in these walls and ceilings may be removed with the walls and ceilings by the Architectural Trades. All dead-end conduit runs shall be plugged at the remaining line outlet boxes or the panels.

H. Where new walls, ceilings, and/or floors are installed which interfere with existing outlets, devices, etc., which are to remain, the Electrical Trades shall adjust, extend and reconnect such items as required to maintain continuity of same.

I. Where devices on existing walls are no longer active, but wires feeding outlets are active, provide blank cover plates and box extensions are required to meet new finishes. Where devices and wires feeding them are no longer active, fill outlet boxes with plaster for finishing by others.

J. Where circuits, conduit, boxes, etc. are no longer used/in service they shall be entirely removed back to the panel (source of power).

K. Where shown as to use existing circuits and equipment in remodeled areas, the Contractor shall verify circuit identification, circuit loads, and as-build methods of installation to complete the demolition and new work in accordance with current codes.

L. Conceal all electrical work wherever possible. Use of surface raceway ("Wiremold") or exposed conduits will be permitted only where approved by the Architect and/or Engineer.

M. Existing lighting shall be reused where indicated on plans. Reused fixtures shall be cleaned with detergent, re-lamped and reconditioned for satisfactory operation and appearance.

3.19 WORK IN EXISTING BUILDINGS

A. The Owner will provide access to existing buildings as required. Access requirements to occupied buildings shall be identified on the project schedule. The Contractor, once work is started in the existing building, shall complete same work without interruption so as to return work areas as soon as possible to Owner.

B. Adequately protect and preserve all existing and newly installed work. The Contractor shall repair any damages that they are responsible for at their expense.

C. Consult with the Architect and/or Engineer as to the methods of carrying on the work so as not to interfere with the Owner's operation any more than absolutely necessary. Accordingly, all service lines shall be kept in operation as long as possible and the services shall only be interrupted at such time as will be designated by the Architect, Engineer, and/or Owner's Representative.

3.20 FIELD QUALITY CONTROL

A. Equipment Start-Up

1. After completion of the installation, all systems and equipment shall be tested by the Contractor in the presence of the Owner's Representative and/or Engineer under actual operating conditions. Tests shall be performed according to manufacturer's recommendations.

2. The Contractor shall include with his bid the services of all required Equipment Manufacturer's field service technicians for a period necessary to complete the work to the satisfaction of the Engineer and Owner.

3. This service shall be for the purposes of check-out, initial start-up, certification, and

instruction of plant personnel.

4. A written report covering the technician's findings and installation approval shall be submitted to the Engineer covering all inspections and outlining in detail any deficiencies noted.

5. Specific requirements, if any, for a particular system or piece of equipment are contained in the particular specification sections. The Contractor's responsibility relative to coordinating these services is contained in Section 01 7700, Closeout Procedures.

B. Manufacturer's Supervision and Field Installation Verification

1. Where specified, electrical equipment manufacturer shall furnish the services of an authorized representative especially trained and experienced in the installation of his equipment to

   a. Supervise the equipment installation in accordance with the approved submittals and manufacturer's instructions.

   b. Be present when the equipment is first put into operation.

   c. Inspect, check, adjust as necessary, and approve the installation.

   d. Repeat the inspection, checking, and adjusting until all trouble or defects are corrected and the equipment installation and operation are acceptable.

   e. Prepare and submit the specified Manufacturers' Certified report. Include all costs for representative's services in the contract price.

C. Final Operation Tests

1. The Contractor shall test all electrical systems for not less than 16 hours, with no interruptions except for normal maintenance or corrective work. Conform to the approved test plan.

2. Testing Materials

   a. The Contractor shall furnish labor, instruments, recorders, gages, materials, and power for tests as required.

3. Testing Methods

   a. The Contractor shall operate systems continuously 24 hours a day under constant inspection of trained operators. Cause variable speed equipment to cycle through the applicable speed range at a steady rate or change. Induce simulated alarm and distressed operating conditions, and test controls and protective devices for correct operation.

D. Short Circuit Analysis and Coordination Study

1. The Contractor shall provide a complete short circuit study and a protective device coordination study for the electrical distribution system. The study shall include all portions of the electrical distribution system throughout the low voltage distribution system. The study shall be submitted to the Engineer prior to granting final approval of the distribution equipment shop drawings.

2. Short Circuit Study

   a. The study shall be performed in accordance with ANSI C37.5 and corresponding IEEE publications.

   b. Short circuit momentary duties and interrupting duties shall be calculated on the basis of maximum available fault current at each switchgear bus, switchboard, and distribution

panelboard.

c. Based upon the calculated short circuit and interrupting duties, the Contractor shall determine the adequacy of the distribution equipment.

3. Protective Device Coordination Study

a. The Contractor shall perform a protective device coordination study to check the selection of circuit breakers and power fuses ratings, protective relays settings, low voltage breaker trip characteristics and settings.

b. The coordination study shall include all voltage classes of equipment from the utility's incoming line protective device down each motor control center and panelboard.

c. The time-circuit characteristics of the protective devices shall be plotted on the appropriate log paper.

d. These plots shall indicate the types of protective devices selected, time delay and instantaneous trip settings.

4. Study Report

a. The results of the short circuit and protective device coordination study shall be summarized in a final report. The report shall be submitted to the Engineer/Owner.

END OF SECTION

SECTION 26 0519

LOW-VOLTAGE ELECTRICAL POWER CABLES (600 V AND LESS)

PART 1 GENERAL

1.01 SECTION INCLUDES

A. Wire and cable for 600 volts and less.

B. Wiring connectors and connections.

1.02 REFERENCE STANDARDS

A. NECA 1 - Standard for Good Workmanship in Electrical Contracting; National Electrical Contractors Association.

B. NFPA 70 - National Electrical Code; National Fire Protection Association.

1.03 SUBMITTALS

A. Project Record Documents: Record actual locations of components and circuits on As-Built plans.

1.04 QUALITY ASSURANCE

A. Conform to requirements of NFPA 70.

B. Products: Furnish products listed and classified by Underwriters Laboratories Inc. as suitable for the purpose specified and indicated.

1.05 PROJECT CONDITIONS

A. Verify that field measurements are as shown on the Drawings.

B. Conductor sizes are based upon copper unless indicated as aluminum "AL" on the Drawings.

C. Wire and cable routing shown on the Drawings are approximate unless dimensioned. Route wire / cable & conduit as required to meet project conditions.

D. Where wire / cable & conduit routing is not shown, and destination only is indicated, determine exact routing and lengths required.

1. Contractor shall coordinate all proposed routings through occupied areas with the Architect/Owner as required to determine acceptable appearance of new routings prior to rough-in. Surface mounted conduit is only allowed where approved by Architect/Owner prior to rough-in.

PART 2 PRODUCTS

2.01 WIRING REQUIREMENTS

A. Concealed Dry Interior Locations: Use only building wire in conduit with Type THHN,THWN,XHHW insulation in conduit.

B. Exposed Dry Interior Locations: Use only building wire in conduit with Type THHN,THWN,XHHW insulation in conduit.

C. Above Accessible Ceilings: Use only building wire in conduit or metal clad cable.

D. Wet or Damp Interior Locations: Use only building wire with Type THWN, XHHW insulation in conduit.

E. Exterior Locations: Use only building wire with Type THWN or XHHW insulation in conduit.

F. Underground Installations: Use only building wire with Type THWN or XHHW insulation in conduit.

G. Use stranded conductors for control circuits.

H. Use conductor not smaller than 10 AWG for power and lighting circuits.

I. Use conductor not smaller than 14 AWG for control circuits.

J. Use 10 AWG conductors for 20 ampere, 120 volt branch circuits longer than 75 feet.

K. Use 8 AWG conductors for 30 ampere, 120 volt branch circuits longer than 75 feet.

L. Conductor sizes are based on copper unless indicated as aluminum or "AL".

M. All feeders not sized on the plans shall be sized by the CONTRACTOR for a maximum of 2% voltage drop. All branch circuits shall be sized for a maximum of 3% voltage drop.

2.02 WIRE MANUFACTURERS

A. Cerro Wire Inc.: www.cerrowire.com.

B. Industrial Wire & Cable, Inc.: www.iewc.com.

C. Southwire Company: www.southwire.com.

D. Royal.

E. Rome.

F. General Cable.

G. Triangle.

2.03 BUILDING WIRE

A. Description: Single conductor insulated wire.

B. Conductor: Copper. Class B strand per ICEA S-61-402.

C. Insulation Voltage Rating: 600 volts.

D. Insulation: NFPA 70.

1. For Feeders and Branch Circuits Equal to and Smaller Than 4/0 AWG (Dry and Damp locations): Type THHN rated 90 degrees C.

2. For Feeders and Branch Circuits Equal to and Smaller Than 4/0 AWG (Wet locations): Type THWN rated 90 degrees C.

3. For Feeders and Branch Circuits Larger Than 4/0 AWG (Dry and Damp locations): Type XHHW rated 90 degrees C.

E. Color Coding:

1. Branch circuits shall have their insulation color coded the entire length as noted below.

2. Feeder conductors shall have their ends taped, when entering junction boxes or panels, as noted below.

3. Color coding shall be as follows:

a. 208/120 volt, 3 phase, 4 wire:

1) grounded neutral - white

2) phase A hot leg - black

3) phase B hot leg - red

4) phase C hot leg - blue

5) ground - green

2.04 CONTROL WIRING

A. Control circuit, single conductor field wire shall be No. 14 AWG, stranded copper with 30 mil thick wall of cross linked polyethylene or polyvinyl chloride insulation rated to withstand a copper temperature of 90 degrees C. at 600 volts without deterioration. It shall meet applicable ICEA Standards.

B. Multi conductor control cable shall consist of individual conductors, No. 14 AWG, stranded copper with 30 mil thick wall of insulation rated to withstand a copper temperature of 75 degrees C without deterioration. The insulation shall be a 20 mil wall of polyethylene with a 10 mil thick polyvinyl chloride jacket. The individual conductors shall be identified per Paragraph 5.6.3. of ICEA Publication No. S 61402 and shall be cabled together with suitable fillers and binder tape to give the completed cable a substantially circular cross section.

2.05 METAL CLAD CABLE (TYPE MC CABLE)

A. Description: NFPA 70, Type MC.

B. Conductor: Copper.

C. Insulation Voltage Rating: 600 volts.

D. Insulation Temperature Rating: 75 degrees C.

E. Insulation Material: Thermoplastic.

F. Armor Material: Steel.

G. Armor Design: Interlocked metal tape.

H. Fittings: Shall be specifically designed for use with type MC cable.

2.06 WIRING CONNECTORS

A. Split Bolt Connectors:

1. Manufacturers:

a. Black Burn.

b. T & B.

c. Burndy.

B. Solderless Pressure Connectors:

1. Manufacturers:

a. AMP.

b. T & B.

c. 3 M.

C. Spring Wire Connectors:

1. Manufacturers:

a. Buchanah Model B-Cap.

b. 3 M Model Scotchlok or Hyflex.

c. Panduit Model P-Conn.

D. Compression Connectors:

1. Manufacturers:

a. Neer.

b. T & B.

c. Appleton.

PART 3 EXECUTION

3.01 EXAMINATION

A. Verify that mechanical work likely to damage wire and cable has been completed.

B. Verify that raceway installation is complete and supported.

C. Verify that field measurements are as indicated.

3.02 PREPARATION

A. Completely and thoroughly swab conduit/raceway before installing wire.

3.03 INSTALLATION

A. Install wire and cable securely, in a neat and workmanlike manner, as specified in NECA 1.

B. Route wire and cable as required to meet project conditions.

1. Wire and cable routing indicated is approximate unless dimensioned.

2. Where wire and cable destination is indicated and routing is not shown, determine exact routing and lengths required.

C. Use wiring methods indicated.

D. All wiring shall be installed in conduit or approved raceway. All raceways shall be provided with a ground conductor unless noted otherwise.

E. Use stranded conductors for control circuits.

F. Pull all conductors into raceway at same time.

G. Use suitable wire pulling lubricant for building wire 4 AWG and larger.

H. Protect exposed cable from damage.

I. Support cables above accessible ceiling, using spring metal clips or metal cable ties to support cables from structure. Do not rest cable on ceiling panels.

J. Use suitable cable fittings and connectors.

K. Neatly train and lace wiring inside boxes, equipment, and panelboards.

L. Clean conductor surfaces before installing lugs and connectors.

M. Make splices, taps, and terminations to carry full ampacity of conductors with no perceptible temperature rise.

N. Use split bolt connectors for copper conductor splices and taps, 6 AWG and larger. Tape uninsulated conductors and connector with electrical tape to 150 percent of insulation rating of conductor.

O. Use solderless pressure connectors with insulating covers for copper conductor splices and taps, 8 AWG and smaller.

P. Use insulated spring wire connectors with plastic caps for copper conductor splices and taps, 10 AWG and smaller.

Q. Identify and color code wire and cable under provisions of Section 26 0553. Identify each conductor with its circuit number or other designation indicated.

R. Branch circuits may be combined up to 8 conductors (A-phase, B-phase, C-phase, neutral and A-phase, B-phase, C-phase, neutral) and 2 ground conductors in conduit. Contractor shall be responsible for derating conductors as required by N.E.C Article 310, Note 8.

S. Branch circuit neutral conductors: The use of multi-wire branch circuits with a common neutral is not permitted. Each branch circuit shall be furnished and installed with an accompanying neutral conductor sized the same as the phase conductor.

END OF SECTION

SECTION 26 0526

GROUNDING AND BONDING FOR ELECTRICAL SYSTEMS

PART 1 GENERAL

1.01 SECTION INCLUDES

A. Grounding and bonding components.

B. Provide all components necessary to complete the grounding system(s) consisting of:

1. New grounding for new circuits connected to existing metal underground water pipe.
2. New grounding for new circuits connected to new bonding to reinforcing steel in Generator pad foundation footing.
3. New grounding for new circuits connected to existing metal frame of the building.
4. New Concrete-encased electrode.
5. New Rod electrodes.

1.02 REFERENCE STANDARDS

A. NFPA 70 - National Electrical Code; National Fire Protection Association.

1.03 PERFORMANCE REQUIREMENTS

A. Grounding System Resistance: 5 ohms.

1.04 SUBMITTALS

A. Test Reports: Indicate overall resistance to ground and resistance of each electrode.

B. Project Record Documents: Record actual locations of components and grounding electrodes.

1.05 QUALITY ASSURANCE

A. Conform to requirements of NFPA 70.

B. Manufacturer Qualifications: Company specializing in manufacturing the products specified in this section with minimum 10 years documented experience with service facilities within 100 miles of Project.

C. Products: Listed and classified by Underwriters Laboratories Inc. as suitable for the purpose specified and indicated.

D. The Contractor shall be responsible for providing all grounding required in accordance with NEC and local code requirements.

PART 2 PRODUCTS

2.01 MANUFACTURERS

A. Cooper Power Systems: www.cooperpower.com.

B. Framatome Connectors International: www.fciconnect.com.

C. Lightning Master Corporation: www.lightningmaster.com.

D. American Electric.

E. Chance.

F. Burndy.

G. Cadweld.

2.02 GENERAL

A. The Contractor shall install a grounding system in accordance with the drawings/specifications, and with the National Electrical Code, NEMA, USASI, and IEEE Standards, latest editions. The ground bar at the main service disconnect (New Service Rated Automatic Transfer Switch ATS) shall be bonded to the existing water mains, existing building structural steel (exposed in boiler room / garage area), driven ground rods (for new Generator & new ATS), etc. by grounding electricode conductors as required for a code compliant grounding system. Maximum grounding resistance shall be achieved per NEC requirements.

2.03 ELECTRODES

A. Manufacturers:

1. Cooper Power Systems: www.cooperpower.com.
2. Framatome Connectors International: www.fciconnect.com.
3. Lightning Master Corporation: www.lightningmaster.com.
4. Chance.
5. American Electric - Blackburn.

B. Rod Electrodes: Copper-clad steel.

1. Diameter: 3/4 inch (19 mm).
2. Length: 10 feet (3000 mm).

2.04 CONNECTORS AND ACCESSORIES

A. Mechanical Connectors: Bronze.

1. Manufacturers: Chance, Burndy, American Electric - Blackburn.

B. Exothermic Connections:

1. Product: Cadweld.

C. Wire: Stranded copper.

D. Foundation Electrodes: #1/0 AWG minimum.

E. Grounding Electrode Conductor: Size to meet NFPA 70 N.E.C. code requirements.

PART 3 EXECUTION

3.01 EXAMINATION

A. Verify existing conditions prior to beginning work.

B. Verify that final backfill and compaction has been completed before driving rod electrodes.

3.02 INSTALLATION

A. Install ground electrodes at locations indicated. Install additional rod electrodes as required to achieve specified resistance to ground.

B. Provide grounding electrode conductor and connect to reinforcing steel in new generator/ATS pad/foundation footing. Bond steel together.

C. Provide bonding to meet requirements described in Quality Assurance.

D. Equipment Grounding Conductor: Provide separate, insulated conductor within each feeder and branch circuit raceway. Terminate each end on suitable lug, bus, or bushing.

E. Ground cables shall be protected by sleeves where the cables extend through a concrete surface. Ground inserts shall be used where ground cables extending through the surface would be exposed to damage during or after construction.

F. Where ground cables are installed in metallic conduit, the cables shall be bonded to the conduit at both ends of the run.

G. Welds on ground cables shall be cleaned and painted with an asphalt base paint where buried underground or imbedded in concrete.

H. Install a minimum #12 AWG green grounding wire for each branch circuit. The grounding wire shall be connected to the grounding terminal bus bars in panelboards, and these bars shall be grounded to the building's grounding system.

I. Circuits run in PVC conduit shall have a separate ground wire.

J. On projects involving additions to existing buildings, the new building addition’s foundation steel reinforcing shall be bonded to the existing building’s grounding electrode system with a minimum #2 CU ground wire.

END OF SECTION

SECTION 26 0529

HANGERS AND SUPPORTS FOR ELECTRICAL SYSTEMS

PART 1 GENERAL

1.01 SECTION INCLUDES

A. Conduit and equipment supports.

B. Anchors and fasteners.

1.02 REFERENCE STANDARDS

A. NECA 1 - Standard Practices for Good Workmanship in Electrical Contracting; National Electrical Contractors Association.

B. NFPA 70 - National Electrical Code; National Fire Protection Association.

1.03 QUALITY ASSURANCE

A. Conform to requirements of NFPA 70.

B. Products: Listed and classified by Underwriters Laboratories Inc. as suitable for the purpose specified and indicated.

PART 2 PRODUCTS

2.01 MATERIALS

A. Hangers, Supports, Anchors, and Fasteners - General: Corrosion-resistant materials of size and type adequate to carry the loads of equipment and conduit, including weight of wire in conduit.

B. Supports: Fabricated of structural steel or formed steel members; galvanized. All structural supports and channels shall be manufactured from a minimum of #16 gauge ASTM A570 grade 33 steel.

C. Anchors and Fasteners:

1. Do not use spring clips.
2. Obtain permission from ENGINEER before using powder-actuated anchors.
3. Concrete Structural Elements: Use precast inserts, expansion anchors, or preset inserts.
4. Steel Structural Elements: Use beam clamps or welded fasteners.
5. Concrete Surfaces: Use expansion anchors.
6. Hollow Masonry, Plaster, and Gypsum Board Partitions: Use hollow wall fasteners.
7. Solid Masonry Walls: Use expansion anchors or preset inserts.
8. Sheet Metal: Use sheet metal screws.

D. Formed Steel Channel:

1. Product: B-Line Strut.

PART 3 EXECUTION

3.01 INSTALLATION

A. Install hangers and supports as required to adequately and securely support electrical system

components, in a neat and workmanlike manner, as specified in NECA 1.

1. Do not fasten supports to pipes, ducts, mechanical equipment, or conduit.
2. Obtain permission from Architect/Engineer before drilling or cutting structural members.

B. Rigidly weld support members or use hexagon-head bolts to present neat appearance with adequate strength and rigidity. Use spring lock washers under all nuts.

C. Install surface-mounted cabinets and panelboards with minimum of four anchors.

D. Use sheet metal channel to bridge studs above and below cabinets and panelboards recessed in hollow partitions.

END OF SECTION

SECTION 26 0534

CONDUIT

PART 1 GENERAL

1.01 SECTION INCLUDES

A. Conduit, fittings and conduit bodies.

1.02 REFERENCE STANDARDS

A. ANSI C80.1 - American National Standard for Electrical Rigid Steel Conduit (ERSC).

B. ANSI C80.3 - American National Standard for Steel Electrical Metallic Tubing (EMT).

C. ANSI C80.5 - American National Standard for Electrical Rigid Aluminum Conduit (ERAC).

D. NECA 1 - Standard Practices for Good Workmanship in Electrical Contracting; National Electrical Contractors Association.

E. NECA 101 - Standard for Installing Steel Conduit (Rigid, IMC, EMT); National Electrical Contractors Association.

F. NEMA FB 1 - Fittings, Cast Metal Boxes, and Conduit Bodies for Conduit, Electrical Metallic Tubing, and Cable; National Electrical Manufacturers Association.

G. NEMA TC 2 - Electrical Polyvinyl Chloride (PVC) Tubing and Conduit; National Electrical Manufacturers Association.

H. NEMA TC 3 - PVC Fittings for Use with Rigid PVC Conduit and Tubing; National Electrical Manufacturers Association.

I. NFPA 70 - National Electrical Code; National Fire Protection Association.

1.03 SUBMITTALS

A. Project Record Documents: Accurately record actual routing of conduits larger than 2 inches (51 mm) in diameter on the As-Built rack set of Record Plans.

1.04 QUALITY ASSURANCE

A. Conform to requirements of NFPA 70.

B. Products: Listed and classified by Underwriters Laboratories Inc. as suitable for purpose specified and shown.

1.05 DELIVERY, STORAGE, AND HANDLING

A. Accept conduit on site. Inspect for damage.

B. Protect conduit from corrosion and entrance of debris by storing above grade. Provide appropriate covering.

C. Protect PVC conduit from sunlight.

1.06 PROJECT CONDITIONS

A. Verify that field measurements are as shown on the drawings.

B. Verify routing and termination locations of conduit prior to rough-in.

C. Conduit routing shown on Drawings in approximate locations unless dimensioned. Route as required to complete wiring system.

D. Where wire and cable routing is not shown on plans, and destination only is indicated, determine exact routing and lengths required.

1. Contractor shall coordinate all proposed routings through occupied areas with the Architect/Owner as required to determine acceptable appearance of new routings prior to rough-in.

2. Contractor shall coordinate location of remote annunciator panels with Owner prior to rough-in.

E. Coordinate painting requirements of exposed conduit in finished areas with specification section 09900 and color with Architect.

PART 2 PRODUCTS

2.01 CONDUIT REQUIREMENTS

A. Conduit Size: Comply with NFPA 70.

1. Minimum Size: 3/4 inch (19 mm) where concealed within unaccessible construction (i.e. within walls, above drywall ceilings, etc.), 1/2" minimum elsewhere.

B. Underground Installations:

1. More than 5 Feet (1.5 Meters) from Foundation Wall: Use galvanized rigid steel conduit, thickwall nonmetallic conduit, or thinwall nonmetallic conduit.

2. Within 5 Feet (1.5 Meters) from Foundation Wall: Use galvanized rigid steel conduit, or thickwall nonmetallic conduit.

3. In or Under Slab on Grade: Use galvanized rigid steel conduit, or thickwall nonmetallic conduit.

4. Minimum Size: 1 inch (25 mm).

C. Outdoor Locations Above Grade: Use galvanized rigid steel conduit.

D. Wet and Damp Locations: Use galvanized rigid steel conduit or rigid aluminum conduit

E. Dry Locations:

1. Concealed: Use galvanized rigid steel conduit or electrical metallic tubing.

2. Exposed: Use galvanized rigid steel conduit or electrical metallic tubing.

F. Transformer and Motor Connections:

1. Liquidtight flexible metal conduit (maximum length shall be 3'-0").

G. AC/MC Cable:

1. Use for concealed branch circuit drops to devices or light fixtures. Do not use AC/MC cable for homeruns to panelboards.

H. Control Wiring (fire alarm, security systems, temperature controls systems, etc.):

1. Use electrical metallic tubing, except when making final connection to moving equipment where flexible conduit or sealtite should be used.

2.02 METAL CONDUIT

A. Manufacturers:

1. Allied Tube & Conduit: www.alliedtube.com.

2. Beck Manufacturing, Inc.: www.beckmfg.com.

3. Wheatland Tube Company: www.wheatland.com.
4. Century.

B. Rigid Steel Conduit: ANSI C80.1. Galvanized Rigid Steel (GRS).

C. Rigid Aluminum Conduit: ANSI C80.5.

D. Fittings and Conduit Bodies: NEMA FB 1; material to match conduit.

1. Connectors and couplings shall be threaded, set-screw, or compression type, and concrete tight and/or rain tight where required.
2. Locknuts shall be malleable iron or steel. Bushings shall be malleable iron, steel, or plastic. Malleable iron or steel bushings shall be zinc or cadmium plated and shall have insulating insert of thermostatic plastic molded and locked into bushing ring. Plastic bushings shall be thermostatic phenolic insulating type. Use of non-rigid plastic bushings is prohibited.

2.03 FLEXIBLE METAL CONDUIT

A. Manufacturers:

1. AFC Cable Systems, Inc.: www.afcweb.com.
2. Electri-Flex Company: www.electriflex.com.
3. International Metal Hose: www.metalhose.com.

B. Description: Interlocked steel construction.

C. Fittings: NEMA FB 1. cast fittings.

D. Flexible metal conduit shall have a separate grounding conductor.

2.04 LIQUIDTIGHT FLEXIBLE METAL CONDUIT

A. Manufacturers:

1. AFC Cable Systems, Inc.: www.afcweb.com.
2. Electri-Flex Company: www.electriflex.com.
3. International Metal Hose: www.metalhose.com.
4. Anaconda Type "UA" for less than 1-1/4" and Type "EF" for larger than 1-1/2".

B. Description: Interlocked steel construction with PVC jacket.

C. Fittings: NEMA FB 1. cast fittings.

D. Flexible metal conduit shall have a separate grounding conductor.

2.05 ELECTRICAL METALLIC TUBING (EMT)

A. Manufacturers:

1. Allied Tube & Conduit: www.alliedtube.com.
2. Beck Manufacturing, Inc.: www.beckmfg.com.
3. Wheatland Tube Company: www.wheatland.com.

B. Description: ANSI C80.3; galvanized tubing.

C. Fittings and Conduit Bodies: NEMA FB 1; steel or malleable iron set screw type.

1. Connectors and couplings shall be threaded, set-screw, or compression type, and concrete tight and/or rain tight where required.

2. Locknuts shall be malleable iron or steel. Bushings shall be malleable iron, steel, or plastic. Malleable iron or steel bushings shall be zinc or cadmium plated and shall have insulating insert of thermostatic plastic molded and locked into bushing ring. Plastic bushings shall be thermostatic phenolic insulating type. Use of non-rigid plastic bushings is prohibited.

2.06 NONMETALLIC CONDUIT

A. Manufacturers:

1. AFC Cable Systems, Inc.: www.afcweb.com.
2. Electri-Flex Company: www.electriflex.com.
3. Carlon.

B. Description:

1. NEMA TC 2; Schedule 40 = Thinwall.
2. Schedule 80 = Thickwall PVC.

C. Fittings and Conduit Bodies: NEMA TC 3.

PART 3 EXECUTION

3.01 EXAMINATION

A. Verify routing and termination locations of conduit prior to rough-in.

B. Conduit routing is shown on drawings in approximate locations unless dimensioned. Route as required to complete wiring system.

3.02 INSTALLATION

A. Install conduit securely, in a neat and workmanlike manner, as specified in NECA 1.

B. Install steel conduit as specified in NECA 101.

C. Install conduit in accordance with manufacturer's instructions.

D. Arrange supports to prevent misalignment during wiring installation.

E. Support conduit using coated steel or malleable iron straps, lay-in adjustable hangers, clevis hangers, and split hangers.

F. Group related conduits; support using conduit rack. Construct rack using steel channel; provide space on each for 25 percent additional conduits.

G. Fasten conduit supports to building structure and surfaces under provisions of Section 26 0529.

H. Do not support conduit with wire or perforated pipe straps. Remove wire used for temporary supports.

I. Do not attach conduit to ceiling support wires.

J. Arrange conduit to maintain headroom and present neat appearance.

K. Route conduit parallel and perpendicular to walls.

L. Route conduit in and under slab from point-to-point.

M. Do not cross conduits in slab.

N. Maintain adequate clearance between conduit and piping.

O. Maintain 12 inch (300 mm) clearance between conduit and surfaces with temperatures exceeding 104 degrees F (40 degrees C).

P. Cut conduit square using saw or pipecutter; de-burr cut ends.

Q. Bring conduit to shoulder of fittings; fasten securely.

R. Join nonmetallic conduit using cement as recommended by manufacturer. Wipe nonmetallic conduit dry and clean before joining. Apply full even coat of cement to entire area inserted in fitting. Allow joint to cure for 20 minutes, minimum.

S. Use conduit hubs or sealing locknuts to fasten conduit to sheet metal boxes in damp and wet locations, and to cast boxes.

T. Install no more than equivalent of three 90 degree bends between boxes. Use conduit bodies to make sharp changes in direction, as around beams. Use factory elbows for bends in metal conduit larger than 2 inch (50 mm) size. Elbows larger than 3" dia. shall be long radius elbows.

U. Avoid moisture traps; provide junction box with drain fitting at low points in conduit system.

V. Provide suitable fittings to accommodate expansion and deflection where conduit crosses seismic, control, and expansion joints.

W. Provide suitable pull string in each empty conduit except sleeves and nipples.

X. Use suitable caps to protect installed conduit against entrance of dirt and moisture.

Y. Ground and bond conduit under provisions of Section 26 0526.

Z. Identify conduit under provisions of Section 26 0553.

AA. Underground exterior conduits shall be sloped away from the building at a minimum of 4" per 100' or 0.33%.

BB. Install insulating bushings at open ends of telecom, security, controls, etc. conduits.

CC. Drawstrings shall be provided for all new empty conduits. Drawstring shall be wax impregnated, nylon, or other synthetic material resistant to moisture and mildew to prevent deterioration.

DD. All underground conduits and/or duct banks shall be installed 24" minimum below grade (unless noted otherwise) and shall slope minimum of 0.33% to manholes, handholes, cable vaults, or other structures.

3.03 FIRESTOPPING

A. Use only firestop products that have been tested according to ASTM E-814 and UL 1479 for the conditions set forth regarding construction assembly type, penetrating item type, annular space requirements and fire rating.

B. Install conduit to preserve fire resistance rating of partitions and other elements, using materials and methods specified in Section 07 8400.

1. For non-combustible penetrations including conduit not passing through a sleeve, the following materials are acceptable:

   a. Hilti FS 601 Elastmeric Firestop Sealant.

   b. 3 M.

   c. CSD Sealing Systems.

   d. Firestop Systems.

2. For non-combustible penetrations including sleeved conduits, the following materials are acceptable:

   a. Hilti FS 601 Elastmeric Firestop Sealant.

b. 3 M.

c. CSD Sealing Systems.

d. Firestop Systems.

3. For combustible penetrations including cables and cable bundles, the following materials are acceptable:

a. Hilti FS 611A Intumescent Firestop Sealant.

b. 3 M.

c. CSD Sealing Systems.

d. Firestop Systems.

4. For large or complex penetrations involving multiple conduits, cable trays, electrical bussway, etc. the following materials are acceptable:

a. Hilti FS 635 Firestop Compound.

b. 3 M.

c. CSD Sealing Systems.

d. International Protective Coatings - KBS Sealbags.

3.04 PAINTING

A. All conduit exposed in finished areas shall be painted to match the surrounding finishes. Refer to specification section 09900 - Coordinate color with Architect.

END OF SECTION

SECTION 26 0537

BOXES

PART 1 GENERAL

1.01 SECTION INCLUDES

A. Wall and ceiling outlet boxes.

B. Pull and junction boxes.

1.02 REFERENCE STANDARDS

A. NECA 1 - Standard Practices for Good Workmanship in Electrical Contracting; National Electrical Contractors Association.

B. NEMA FB 1 - Fittings, Cast Metal Boxes, and Conduit Bodies for Conduit, Electrical Metallic Tubing, and Cable; National Electrical Manufacturers Association.

C. NEMA OS 1 - Sheet Steel Outlet Boxes, Device Boxes, Covers, and Box Supports; National Electrical Manufacturers Association.

D. NEMA 250 - Enclosures for Electrical Equipment (1000 Volts Maximum); National Electrical Manufacturers Association.

E. NFPA 70 - National Electrical Code; National Fire Protection Association.

1.03 SUBMITTALS

A. Project Record Documents: Record actual locations of pull, and junction boxes on project record documents.

1.04 QUALITY ASSURANCE

A. Conform to requirements of NFPA 70.

B. Products: Provide products listed and classified by Underwriters Laboratories Inc., as suitable for the purpose specified and indicated.

C. Pull boxes, junction boxes, and cable support boxes of proper size and design shall be provided in accordance with the N.E.C. and as required to facilitate installation of wires. All boxes shall be sized in accordance with the N.E.C. Covers shall be gasketed and held in place with corrosion resistant machine screws. Cable supports for vertical runs shall be provided at code required locations, within pull or junction boxes. Boxes shall be NEMA 12 for inside and NEMA 4 for outside use where exposed to the weather or where otherwise called for on the drawings.

PART 2 PRODUCTS

2.01 OUTLET BOXES

A. Sheet Metal Outlet Boxes: NEMA OS 1, galvanized steel.

1. Luminaire and Equipment Supporting Boxes: Rated for weight of equipment supported; include 1/2 inch (13 mm) male fixture studs where required.

2. Concrete Ceiling Boxes: Concrete type.

B. Cast Boxes: NEMA FB 1, Type FD, cast feralloy. Provide gasketed cover by box manufacturer. Provide threaded hubs.

C. Wall Plates: Stainless Steel coverplates.

D. Outlet and switch boxes shall be minimum of 2-1/8" deep.

2.02 PULL AND JUNCTION BOXES

A. Sheet Metal Boxes: NEMA OS 1, galvanized steel.

B. Surface Mounted Cast Metal Box: NEMA 250, Type 4; flat-flanged, surface mounted junction box:

1. Material: Galvanized cast iron.
2. Cover: Furnish with ground flange, neoprene gasket, and stainless steel cover screws.

C. Fiberglass Handholes: Die molded glass fiber hand holes:

1. Composite handholds shall be constructed of polymer concrete and reinforced by a heavy weave fiberglass. The handholes shall have internal dimensions indicated on plans, minimum size 36”L x 24”W x 30”Deep. The material shall have the following properties:
   a. Compressive strength: 11,000 PSI; Tensile strength: 1,700 PSI; Flexural strength: 7,500 PSI.
2. Cable Entrances: Pre-cut 4 x 4 inch cable entrance mouseholes at center bottom of each side.
3. Cover: Glass fiber weatherproof cover with nonskid finish, stainless steel screws, and labeled “ELECTRIC”.
4. Provide all accessories (i.e top/bottom extensions, etc.) as required to accommodate conduit routings into/out of the handholes.
5. Manufacturer:
   a. Hubbell, Quazite.

PART 3 EXECUTION

3.01 EXAMINATION

A. Electrical boxes are shown on Drawings in approximate locations unless dimensioned. Install at location required for box to serve intended purpose.

3.02 INSTALLATION

A. Install boxes securely, in a neat and workmanlike manner, as specified in NECA 1.

B. Install in locations as shown on Drawings, and as required for splices, taps, wire pulling, equipment connections, and as required by NFPA 70.

C. Coordinate installation of outlet boxes for equipment connected under Section 26 2717.

D. Set wall mounted boxes at elevations to accommodate mounting heights indicated.

E. Electrical boxes are shown on Drawings in approximate locations unless dimensioned.

F. Maintain headroom and present neat mechanical appearance.

G. Install pull boxes and junction boxes in accessible locations (above drop lay-in ceilings) and in unfinished areas only.

H. Provide identification labels on all junction boxes indicating what systems/equipment circuits are feeding (i.e. Lights in Room #102) and where they are being fed from (i.e. Panel LP-1)

I. Install boxes to preserve fire resistance rating of partitions and other elements.

J. Use flush mounting outlet box in finished areas.

K. Support boxes independently of conduit, except cast box that is connected to two rigid metal conduits both supported within 12 inches (305 mm) of box.

L. Use 2-gang 4" square boxes with single plaster rings for single device outlets.

M. Use cast outlet box in exterior locations and wet locations.

N. Large Pull Boxes (boxes larger than 100 cubic inches in volume or 12 inches in any dimension): Use hinged enclosure in interior dry locations, surface-mounted cast metal box in other locations.

3.03 ADJUSTING

A. Adjust flush-mounting outlets to make front flush with finished wall material.

B. Install knockout closures in unused box openings.

3.04 CLEANING

A. Clean interior of boxes to remove dust, debris, and other material.

B. Clean exposed surfaces and restore finish.

END OF SECTION

SECTION 26 0553

IDENTIFICATION FOR ELECTRICAL SYSTEMS

PART 1 GENERAL

1.01 SECTION INCLUDES

A. Nameplates and labels.

B. Wire and cable markers.

C. Conduit markers.

D. Underground waring tape.

E. Panel schedules.

1.02 REFERENCE STANDARDS

A. NFPA 70 - National Electrical Code; National Fire Protection Association.

1.03 QUALITY ASSURANCE

A. Conform to requirements of NFPA 70.

B. Products: Listed and classified by Underwriters Laboratories Inc. as suitable for purpose specified and shown.

PART 2 PRODUCTS

2.01 MANUFACTURERS

A. Brady Corporation: www.bradycorp.com.

B. Seton Identification Products: www.seton.com/aec.

C. Thomas & Betts.

D. Panduit.

2.02 NAMEPLATES AND LABELS

A. Nameplates: Engraved three-layer laminated plastic, black letters on white background.

B. Locations:

1. Each electrical distribution and control equipment enclosure (including starters, disconnects, panelboards, breakers at Distribution Panels, etc.).
2. Remote Annunciators.

C. Letter Size:

1. Use 1/2 inch letters for identifying equipment and loads. Identification shall indicate where the load is fed from.

2.03 WIRE MARKERS

A. Description: Vinyl cloth type self-adhesive wire markers.

B. Description: tape or split sleeve type wire markers.

C. Locations: Each conductor at panelboard gutters, pull boxes, and junction boxes each load connection.

1. Identify circuit feeder numbers at all wiring devices (receptacle, light switches, dimmers, etc.) with a self-adhesive wire marker taped to the back of the device cover plate.

D. Legend:

1. Power and Lighting Circuits: Branch circuit or feeder number indicated on drawings.
2. Control Circuits: Control wire number indicated on shop drawings.

2.04 CONDUIT MARKERS

A. Description: Size: 1-1/8"x4-1/2" minimum. Color: Background color as specified below with black lettering.

B. Location: Furnish markers for each conduit longer than 6 feet (2 m).

C. Spacing: 20 feet (6 m) on center.

D. Color:

1. Fire Alarm System: Red.

E. Legend:

1. 208 Volt System: 208 Volt.
2. Fire Alarm System: Fire Alarm.
3. Telephone System: Telecom.

2.05 UNDERGROUND WARNING TAPE

A. Description: 4 inch (100 mm) wide plastic tape, detectable type colored red with suitable warning legend describing buried electrical lines.

2.06 PANEL SCHEDULES

A. Each panel shall have a typewritten panel schedule indicating loads. A clear plastic cover over the schedule shall be provided to protect it.

B. Existing panel schedules shall be improved to indicate all existing loads and/or updated to indicate all changes that have occurred during renovation. Typing over writing over existing entries on existing schedules is not acceptable. A new schedule shall be provided. Entries must be in type written form.

PART 3 EXECUTION

3.01 PREPARATION

A. Degrease and clean surfaces to receive nameplates and labels.

3.02 INSTALLATION

A. Install nameplates and labels parallel to equipment lines.

B. Secure nameplates to inside surface of door on panelboard that is recessed in finished locations.

C. Identify underground conduits using underground warning tape. Install one tape per trench at 3 inches (75 mm) below finished grade.

END OF SECTION

SECTION 26 2416

PANELBOARDS

PART 1 GENERAL

1.01 SECTION INCLUDES

A. Power distribution panelboards.

B. Lighting and appliance panelboards.

C. Overcurrent protective devices for panelboards.

1.02 REFERENCE STANDARDS

A. FS W-C-375 - Circuit Breakers, Molded Case; Branch Circuit and Service; Federal Specification; Revision D.

B. NECA 1 - Standard for Good Workmanship in Electrical Contracting; National Electrical Contractors Association.

C. NECA 407 - Standard for Installing and Maintaining Panelboards; National Electrical Contractors Association.

D. NEMA 250 - Enclosures for Electrical Equipment (1000 Volts Maximum).

E. NEMA PB 1 - Panelboards; National Electrical Manufacturers Association.

F. NEMA PB 1.1 - General Instructions for Proper Installation, Operation and Maintenance of Panelboards Rated 600 Volts or Less; National Electrical Manufacturers Association.

G. NETA STD ATS - Acceptance Testing Specifications for Electrical Power Distribution Equipment and Systems; International Electrical Testing Association.

H. NFPA 70 - National Electrical Code; National Fire Protection Association.

I. UL 50 - Enclosures for Electrical Equipment, Non-Environmental Considerations; Current Edition, Including All Revisions.

J. UL 50E - Enclosures for Electrical Equipment, Environmental Considerations; Current Edition, Including All Revisions.

K. UL 67 - Panelboards; Current Edition, Including All Revisions.

L. UL 489 - Molded-Case Circuit Breakers, Molded-Case Switches and Circuit Breaker Enclosures; Current Edition, Including All Revisions.

1.03 SUBMITTALS

A. Shop Drawings: Indicate outline and support point dimensions, voltage, main bus ampacity, overcurrent protective device arrangement and sizes, short circuit current ratings, conduit entry locations, conductor terminal information, and installed features and accessories.

B. Project Record Documents: Record actual installed locations of panelboards and actual installed circuiting arrangements.

C. Maintenance Data: Include information on replacement parts and recommended maintenance procedures and intervals.

1.04 QUALITY ASSURANCE

A. Conform to requirements of NFPA 70.

B. Manufacturer Qualifications: Company specializing in manufacturing the products specified in this section with minimum 10 years documented experience.

1.05 ADMINISTRATIVE REQUIREMENTS

A. Coordination:

1. Coordinate the work with other trades to avoid placement of ductwork, piping, equipment, or other potential obstructions within the dedicated equipment spaces and working clearances for electrical equipment required by NFPA 70.
2. Coordinate arrangement of electrical equipment with the dimensions and clearance requirements of the actual equipment to be installed.
3. Coordinate the work with other trades to provide walls suitable for installation of flush-mounted panelboards where indicated.
4. Verify with manufacturer that conductor terminations are suitable for use with the conductors to be installed.
5. Notify ENGINEER of any conflicts with or deviations from the contract documents. Obtain direction before proceeding with work.

1.06 DELIVERY, STORAGE, AND HANDLING

A. Receive, inspect, handle, and store panelboards in accordance with manufacturer's instructions and NECA 407.

B. Store in a clean, dry space. Maintain factory wrapping or provide an additional heavy canvas or heavy plastic cover to protect units from dirt, water, construction debris, and traffic.

C. Handle carefully in accordance with manufacturer's written instructions to avoid damage to panelboard internal components, enclosure, and finish.

1.07 MAINTENANCE MATERIALS

A. Furnish two of each panelboard key.

PART 2 PRODUCTS

2.01 MANUFACTURERS

A. Schneider Electric; Square D Products: www.schneider-electric.us. BASE BID Square D, other approved manufacturers may only be bid as a voluntary alternate to the base bid and must be clarified in the bid as such.

B. General Electric Company: www.geindustrial.com.

C. Siemens.

2.02 ALL PANELBOARDS

A. Provide products listed and labeled by Underwriters Laboratories Inc. as suitable for the purpose indicated.

1. MDP shall be service rated.

B. Unless otherwise indicated, provide products suitable for continuous operation under the following service conditions:

1. Altitude: Less than 6,600 feet (2,000 m).
2. Ambient Temperature:

a. Panelboards Containing Circuit Breakers: Between 23 degrees F (-5 degrees C) and

104 degrees F (40 degrees C).

C. Short Circuit Current Rating: Refer to 1-line diagram on plans – Contractor shall verify AIC with local utility prior to ordering panelboards.

D. Mains: Configure for top or bottom incoming feed as indicated or as required for the installation.

E. Branch Overcurrent Protective Devices: Replaceable without disturbing adjacent devices.

F. Bussing: Sized in accordance with UL 67 temperature rise requirements.

1. Provide solidly bonded equipment ground bus in each panelboard, with a suitable lug for each feeder and branch circuit equipment grounding conductor.

2. Bussing may be Aluminum or Copper where indicated as CU.

G. Conductor Terminations: Suitable for use with the conductors to be installed.

H. Enclosures: Comply with NEMA 250, and list and label as complying with UL 50 and UL 50E.

1. Environment Type per NEMA 250: Unless otherwise indicated, as specified for the following installation locations:

a. NEMA 1 for interior locations.

b. NEMA 3R or 4X for exterior or wet/damp locations.

2. Boxes: Galvanized steel unless otherwise indicated.

a. Provide wiring gutters sized to accommodate the conductors to be installed.

3. Fronts:

a. Fronts for Surface-Mounted Enclosures: Same dimensions as boxes.

b. Fronts for Flush-Mounted Enclosures: Overlap boxes on all sides to conceal rough opening.

4. Lockable Doors: All locks keyed alike unless otherwise indicated.

I. Future Provisions: Prepare all unused spaces for future installation of devices including bussing, connectors, mounting hardware and all other required provisions.

2.03 POWER DISTRIBUTION PANELBOARDS

A. Description: Panelboards complying with NEMA PB 1, power and feeder distribution type, circuit breaker type, and listed and labeled as complying with UL 67; ratings, configurations and features as indicated on the drawings.

B. Conductor Terminations:

1. Main and Neutral Lug Material: Aluminum (or Copper – CU where indicated), suitable for terminating either aluminum or copper conductors.

2. Main and Neutral Lug Type: Mechanical.

C. Bussing:

1. Phase and Neutral Bus Material: Aluminum or Copper.

2. Ground Bus Material: Aluminum or Copper.

D. Circuit Breakers:

1. Provide bolt-on type or plug-in type secured with locking mechanical restraints.

E. Enclosures:

1. Provide surface-mounted enclosures unless otherwise indicated.

F. Manufacturers:

1. Square D I-Line. BASE BID SQUARE D.
2. Equal by approved manufacturer may be bid as alternate.

G. Description: NEMA PB 1, circuit breaker type.

J. Minimum integrated short circuit rating: As indicated. 65,000 amps rms minimum. Contractor shall verify AIC with local utility prior to ordering panelboards.

H. Molded Case Circuit Breakers: With integral thermal and instantaneous magnetic trip in each pole; UL listed. For air conditioning equipment branch circuits provide circuit breakers UL listed as Type HACR.

I. Current Limiting Molded Case Circuit Breakers: With integral thermal and instantaneous magnetic trip in each pole, coordinated with automatically resetting current limiting elements in each pole: UL listed. Interrupting rating 100,000 symmetrical amperes, let-through current and energy level less than permitted for same size Class RK-5 fuse.

J. Enclosure: NEMA PB 1, Type 1, 16 inches deep, 40 inches wide, cabinet box, minimum.

1. Provide surface-mounted or flush-mounted enclosures as indicated.
2. Provide clear plastic circuit directory holder mounted on inside of door.

K. Cabinet Front: Surface type, fastened with concealed trim clamps, hinged door with flush lock, finished in manufacturer's standard gray enamel.

2.04 LIGHTING AND APPLIANCE PANELBOARDS

B. Description: Panelboards complying with NEMA PB 1, lighting and appliance branch circuit type, circuit breaker type, and listed and labeled as complying with UL 67; ratings, configurations and features as indicated on the drawings.

C. Conductor Terminations:

1. Main and Neutral Lug Material: Aluminum or Copper, suitable for terminating aluminum or copper conductors.
2. Main and Neutral Lug Type: Mechanical.

D. Bussing:

1. Phase Bus Connections: Arranged for sequential phasing of overcurrent protective devices.
2. Phase and Neutral Bus Material: Aluminum or Copper.
   a. Provide double neutral bus where scheduled.
3. Ground Bus Material: Aluminum or Copper.
   a. Provide insulated ground bus where scheduled.

E. Circuit Breakers: Thermal magnetic bolt-on type unless otherwise indicated.

F. Enclosures:

1. Provide surface-mounted or flush-mounted enclosures as indicated.
2. Provide clear plastic circuit directory holder mounted on inside of door.

G. Manufacturers:

1. Square D NQ or NF type. BASE BID SQUARE D.
2. Equal by approved manufacturer may be bid as alternate.

H. Description: NEMA PB1, circuit breaker type, lighting and appliance branch circuit panelboard.

I. Minimum Integrated Short Circuit Rating: As indicated on drawings or minimum as listed below.

1. 208/240 Volt Panelboards: 14,000 amperes rms symmetrical.
2. 480/277 Volt Panelboards: 22,000 amperes rms symmetrical.

J. Molded Case Circuit Breakers: Thermal magnetic trip circuit breakers, bolt-on type, with common trip handle for all poles; UL listed.

1. Type SWD for lighting circuits.
2. Type HACR for air conditioning equipment circuits.
3. Class A ground fault interrupter circuit breakers where scheduled.
4. Do not use tandem circuit breakers.
5. Lock-on devices shall be provided for all branch circuits supplying exit lighting, un-switched night lighting, emergency lighting, security systems, clock and program systems, and/or fire alarm.

K. Enclosure: NEMA PB 1, Type 1. (Type 3R for exterior locations).

L. Cabinet Front: Flush or Surface (as noted on plans) cabinet front with concealed trim clamps, concealed hinge, metal directory frame, and flush lock all keyed alike. Finish in manufacturer's standard gray enamel.

2.05 OVERCURRENT PROTECTIVE DEVICES

A. Molded Case Circuit Breakers:

1. Description: Quick-make, quick-break, over center toggle, trip-free, trip-indicating circuit breakers listed and labeled as complying with UL 489, and complying with FS W-C-375 where applicable; ratings, configurations, and features as indicated on the drawings.
2. Interrupting Capacity:
   a. Provide circuit breakers with interrupting capacity as required to provide the short circuit current rating indicated, but not less than:
   b. Fully Rated Systems: Provide circuit breakers with interrupting capacity not less than the short circuit current rating indicated.
3. Conductor Terminations:
   a. Lug Material: Aluminum, suitable for terminating aluminum or copper conductors.
4. Thermal Magnetic Circuit Breakers: For each pole, furnish thermal inverse time tripping element for overload protection and magnetic instantaneous tripping element for short circuit protection.
5. Multi-Pole Circuit Breakers: Furnish with common trip for all poles.

PART 3 EXECUTION

3.01 INSTALLATION

A. Install products in accordance with manufacturer's instructions.

B. Install panelboards securely, in a neat and workmanlike manner in accordance with NECA 1

(general workmanship), NECA 407 (panelboards), and NEMA PB 1.1.

C. Arrange equipment to provide minimum clearances in accordance with manufacturer's instructions and NFPA 70.

D. Provide required supports in accordance with Section 26 0529.

E. Mount panelboards such that the highest position of any operating handle for circuit breakers or switches does not exceed 79 inches (2000 mm) above the floor or working platform.

F. Provide grounding and bonding in accordance with Section 26 0526.

G. Install all field-installed branch devices, components, and accessories.

H. Install panelboards in accordance with NEMA PB 1.1 and NECA 1.

I. Install panelboards plumb. Install recessed panelboards flush with wall finishes.

J. Height: 6 feet (1800 mm) to top of panelboard; install panelboards taller than 6 feet (1800 mm) with bottom no more than 4 inches (100 mm) above floor.

K. Provide filler plates to cover unused spaces in panelboards.

L. Provide typed/computer-generated circuit directory for each lighting and appliance panelboard, and each power distribution panelboard provided with a door, clearly and specifically indicating the loads served. Identify spares and spaces.

M. Provide typed circuit directory for each branch circuit panelboard. Revise directory to reflect circuiting changes required to balance phase loads.

N. Provide identification nameplate for each panelboard in accordance with Section 26 0553.

O. Provide arc flash warning labels in accordance with NFPA 70.

3.02 FIELD QUALITY CONTROL

A. Perform inspection, testing, and adjusting in accordance with Section 01 4000.

B. Molded Case Circuit Breakers: Perform inspections and tests listed in NETA STD ATS, Section 7.6.1.1 for all main circuit breakers and circuit breakers larger than 400 amperes. Tests listed as optional are not required.

C. Correct deficiencies and replace damaged or defective panelboards or associated components.

D. Visual and Mechanical Inspection: Inspect for physical damage, proper alignment, anchorage, and grounding. Check proper installation and tightness of connections for circuit breakers, fusible switches, and fuses.

3.03 ADJUSTING

A. Adjust tightness of mechanical and electrical connections to manufacturer's recommended torque settings.

B. Adjust alignment of panelboard fronts.

END OF SECTION

SECTION 26 2701

ELECTRICAL SERVICE ENTRANCE

PART 1 GENERAL

1.01 SECTION INCLUDES

A. Metering transformer cabinets.

B. Meter bases.

C. Service Coordination:

1. Contractor shall arrange with Utility Company (Consumers Energy) for permanent electrical service, either new service or renovations to existing service. Contractor shall be responsible for providing drawings to the Utility Company for Coordination of services and potential utility charges and/or any Utility requirements for conduit sleeves, meter bases, etc. Contractor shall provide conduit for primary cable from service to transformer, transformer pad (if pad mounted), and installation of meter base per utility requirements. Owner shall pay for any direct utility costs for new or modified service charges directly to Utility.

1.02 REFERENCE STANDARDS

A. NECA 1 - Standard Practices for Good Workmanship in Electrical Contracting; National Electrical Contractors Association.

B. NFPA 70 - National Electrical Code; National Fire Protection Association.

1.03 SYSTEM DESCRIPTION

A. Service Entrance: Either Overhead or Underground service entrance, per the plans, but also as coordinated with & determined by the Electrical Utility.

1.04 QUALITY ASSURANCE

A. Perform work in accordance with utility company written requirements and NFPA 70.

B. Products: Listed and classified by Underwriters Laboratories Inc. as suitable for the purpose specified and indicated.

1.05 PRE-INSTALLATION MEETING

A. Convene four (4) weeks prior to commencing work of this section. Review service entrance requirements and details with Utility Company representative at least eight (8) weeks prior to start of new electrical service.

PART 2 PRODUCTS

2.01 COMPONENTS

A. Metering Transformer Cabinets: Sheet metal cabinet with hinged door, conforming to utility company requirements, with provisions for locking and sealing.

1. Size: As required by utility.

B. Meter Base: Furnished by utility company.

C. Other Components: As required by utility company.

PART 3 EXECUTION

3.01 PREPARATION

A. Arrange with utility company to obtain permanent electric service, or improvements/upgrades/shut-downs on existing electrical services, for the Project. The Contractor shall be responsible for providing drawings to the Utility Company and for Coordination of the new service or modifications to existing service.

B. Verify that field measurements are as indicated on utility company drawings.

C. Coordinate location of Utility Company's facilities to ensure proper access is available.

3.02 INSTALLATION

A. Install securely, in a neat and workmanlike manner, as specified in NECA 1.

END OF SECTION

SECTION 26 2717

EQUIPMENT WIRING

PART 1 GENERAL

1.01 SECTION INCLUDES

A. Electrical connections to equipment.

1.02 REFERENCE STANDARDS

A. NEMA WD 1 - General Color Requirements for Wiring Devices; National Electrical Manufacturers Association.

B. NFPA 70 - National Electrical Code; National Fire Protection Association.

1.03 QUALITY ASSURANCE

A. Conform to requirements of NFPA 70.

B. Products: Listed and classified by Underwriters Laboratories Inc. as suitable for the purpose specified and indicated.

1.04 COORDINATION

A. Obtain and review shop drawings, product data, manufacturer's wiring diagrams, and manufacturer's instructions for equipment furnished under other sections.

B. Determine connection locations and requirements.

C. Sequence rough-in of electrical connections to coordinate with installation of equipment.

D. Sequence electrical connections to coordinate with start-up of equipment.

PART 2 PRODUCTS

2.01 MATERIALS

A. Cords and Caps: NEMA WD 6; match receptacle configuration at outlet provided for equipment.

1. Colors: Conform to NEMA WD 1.
2. Cord Construction: NFPA 70, Type SO, multiconductor flexible cord with identified equipment grounding conductor, suitable for use in damp locations.
3. Size: Suitable for connected load of equipment, length of cord, and rating of branch circuit overcurrent protection.

B. Flexible Conduit: As specified in Section 26 0534.

C. Wire and Cable: As specified in Section 26 0519.

D. Boxes: As specified in Section 26 0537.

PART 3 EXECUTION

3.01 EXAMINATION

A. Verify that equipment is ready for electrical connection, wiring, and energization.

3.02 ELECTRICAL CONNECTIONS

A. Make electrical connections in accordance with equipment manufacturer's instructions.

B. Make conduit connections to equipment using flexible conduit. Use liquidtight flexible conduit with watertight connectors in damp or wet locations. Maximum length shall be 6 feet. Minimum size shall be 3/4" diameter.

C. Connect heat producing equipment using wire and cable with insulation suitable for temperatures encountered.

D. Provide receptacle outlet to accommodate connection with attachment plug.

E. Provide cord and cap where field-supplied attachment plug is required.

F. Install suitable strain-relief clamps and fittings for cord connections at outlet boxes and equipment connection boxes.

G. Install disconnect switches, controllers, control stations, and control devices to complete equipment wiring requirements.

H. Install interconnecting conduit and wiring between devices and equipment to complete equipment wiring requirements.

END OF SECTION