HARBOR BEACH COMMUNITY SCHOOLS

402 S. 5TH STREET, HARBOR BEACH, MI 48441

PHASE 1 - 2026 ADDITION & RENOVATIONS

PROJECT LOCATION

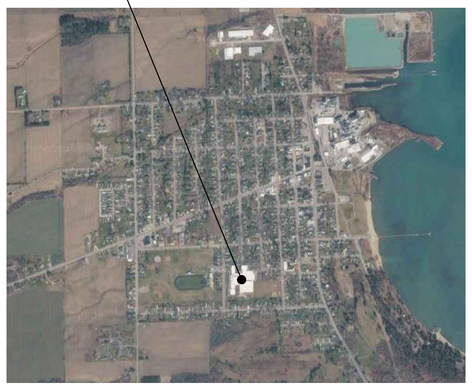

LOCATION MAP

NO SCALE

N

IDI Project No: 24-138

ISSUED FOR: CONSTRUCTION 8-28-26

IDI INTEGRATED DESIGNS INC.

ARCHITECTURE
ENGINEERING
CONSULTING

MARQUETTE OFFICE:
1021 W. BARAGA AVENUE
MARQUETTE, MI 49855
PHONE: (906)228-4480
FAX: (906)228-7524

BRIGHTON OFFICE:
8571 W. GRAND RIVER AVE., STE 600
BRIGHTON, MI 48816
PHONE: (810)229-2701
FAX: (810)229-6767

DRAWING SHEET INDEX

COVER

CIVIL
C0.1 CIVIL NOTES
C1.0 DEMOLITION PLAN
C2.0 SITE PLAN
C3.0 GRADING & UTILITY PLAN
C4.0 CIVIL DETAILS
C4.1 CIVIL DETAILS

STRUCTURAL
S0.0 QUALITY CONTROL TABLES
S1.0 FOUNDATION PLAN – ADDITION
S2.0 ROOF FRAMING PLAN – ADDITION
S3.0 FOUNDATION DETAILS – ADDITION
S4.0 FRAMING DETAILS – DETAILS

ARCHITECTURAL
G0.1 LIFE SAFETY PLAN AND CODE INFORMATION
G0.2 GENERAL NOTES, SYMBOL LEGEND AND ADA REQUIREMENTS
A1.0 COMPOSITE (CORRIDOR) DEMOLITION PLAN
A1.1 DEMOLITION PLAN – ADDITION
A1.2 DEMOLITION PLAN – AREA 'A'
A1.3 DEMOLITION PLAN – AREA 'B'
A1.4 DEMOLITION PLAN – AREA 'C'
A1.5 DEMOLITION PLAN – AREA 'D'
A1.6 DEMOLITION PLAN – AREA 'E'
A1.7 DEMOLITION PLAN – AREA 'F'
A1.8 DEMOLITION PLAN – AREA 'G'
A1.9 DEMOLITION PLAN – AREA 'H'
A2.0 COMPOSITE (CORRIDOR) PLAN
A2.1 FLOOR PLAN – ADDITION
A2.2 FLOOR PLAN – AREA 'A'
A2.3 FLOOR PLAN – AREA 'B'
A2.4 FLOOR PLAN – AREA 'C'
A2.5 FLOOR PLAN – AREA 'D'
A2.6 FLOOR PLAN – AREA 'E'
A2.7 FLOOR PLAN – AREA 'F'
A2.8 FLOOR PLAN – AREA 'G'
A2.9 FLOOR PLAN – AREA 'H'
A2.10 ENLARGED FLOOR AND CEILING PLANS
A2.11 CEILING PLAN – ADDITION
A2.12 ROOF PLAN – ADDITION
A3.0 INTERIOR ELEVATIONS
A3.1 INTERIOR ELEVATIONS
A4.0 EXTERIOR ELEVATIONS – ADDITION
A4.1 EXTERIOR ELEVATIONS – ADDITION
A5.0 BUILDING SECTIONS
A5.1 BUILDING SECTIONS
A5.2 BUILDING SECTIONS
A6.0 WALL SECTIONS
A6.1 WALL SECTIONS
A7.0 DOOR AND WINDOW SCHEDULES
A7.1 ROOM FINISH SCHEDULE – HOME EC. & ADDITION
A7.2 COMPOSITE FLOOR FINISH PLAN AND KEY
A9.0 DETAILS

MECHANICAL
MP0.0 MECHANICAL AND PLUMBING SYMBOLS AND LEGENDS
M1.0 MECHANICAL DEMOLITION PLANS
M1.1 MECHANICAL DEMOLITION PLANS
M2.0 MECHANICAL NEW WORK PLANS
M2.1 MECHANICAL NEW WORK PLANS
M2.2 MECHANICAL NEW WORK PLANS
M2.3 MECHANICAL NEW WORK PLANS
M3.0 MECHANICAL DETAILS
M3.1 MECHANICAL DETAILS
M3.2 MECHANICAL DETAILS
M4.0 MECHANICAL SCHEDULES
M4.1 MECHANICAL SCHEDULES
M5.0 TEMPERATURE CONTROLS
M5.1 TEMPERATURE CONTROLS

PLUMBING
P1.0 PLUMBING DEMOLITION PLANS
P2.0 PLUMBING NEW WORK PLANS
P2.1 PLUMBING NEW WORK PLANS
P3.0 PLUMBING DETAILS AND SCHEDULES

DRAWING SHEET INDEX CONTINUED
FP2.0 FIRE PROTECTION COMPOSITE PLAN NEW WORK

ELECTRICAL
E0.1 OVERALL PLAN – ELECTRICAL DEMOLITION
E0.2 OVERALL PLAN – ELECTRICAL REVISIONS
E1.1 AREA 'A' – ELECTRICAL DEMOLITION
E1.2 AREA 'B' – ELECTRICAL DEMOLITION
E1.3 AREA 'C' – ELECTRICAL DEMOLITION
E1.4 AREA 'D' – ELECTRICAL DEMOLITION
E1.5 AREA 'E' – ELECTRICAL DEMOLITION
E1.6 AREA 'F' – ELECTRICAL DEMOLITION
E1.7 AREA 'G' – ELECTRICAL DEMOLITION
E1.8 AREA 'H' – ELECTRICAL DEMOLITION
E1.9 AREA 'H' 2nd FLOOR – ELECTRICAL DEMOLITION
E2.1 ADDITION – LIGHTING
E2.2 AREA 'A' – LIGHTING
E2.3 AREA 'C' – LIGHTING
E2.4 AREA 'D' – LIGHTING
E2.5 AREA 'G' – LIGHTING
E3.1 ADDITION – POWER AND SYSTEMS
E3.2 AREA 'B' – POWER AND SYSTEMS
E3.3 AREA 'C' – POWER AND SYSTEMS
E3.4 AREA 'E' – POWER AND SYSTEMS
E3.5 AREA 'G' – POWER AND SYSTEMS
E3.6 AREA 'H' – POWER AND SYSTEMS
E4.1 ADDITION – FIRE ALARM
E4.2 AREA 'A' – FIRE ALARM
E4.3 AREA 'B' – FIRE ALARM
E4.4 AREA 'C' – FIRE ALARM
E4.5 AREA 'D' – FIRE ALARM
E4.6 AREA 'E' – FIRE ALARM
E4.7 AREA 'F' – FIRE ALARM
E4.8 AREA 'G' – FIRE ALARM
E4.9 AREA 'H' – FIRE ALARM
E4.10 AREA 'H' 2nd FLOOR – FIRE ALARM
E5.1 ELECTRICAL INFORMATION
E5.2 ELECTRICAL DETAILS
E5.3 EXISTING ELECTRICAL RISER DIAGRAMS
E5.4 REVISED ELECTRICAL RISER DIAGRAMS
E5.5 ELECTRICAL PANEL SCHEDULES
E5.6 ELECTRICAL PANEL SCHEDULES
E6.1 ADDITION EMERGENCY LIGHTING POINT BY POINT
E6.2 AREA 'A' EMERGENCY LIGHTING POINT BY POINT
E6.3 AREA 'C' EMERGENCY LIGHTING POINT BY POINT
E6.4 AREA 'G' EMERGENCY LIGHTING POINT BY POINT

CONSULTANT

MUSIC STORAGE
WENGER 1 OF 2
WENGER 2 OF 2

HOME EC MECHANICAL EQUIPMENT
CAPTIVEAIRE 1 OF 36
CAPTIVEAIRE 2 OF 36
CAPTIVEAIRE 3 OF 36
CAPTIVEAIRE 4 OF 36
CAPTIVEAIRE 5 OF 36
CAPTIVEAIRE 6 OF 36
CAPTIVEAIRE 7 OF 36
CAPTIVEAIRE 8 OF 36
CAPTIVEAIRE 9 OF 36
CAPTIVEAIRE 10 OF 36
CAPTIVEAIRE 11 OF 36
CAPTIVEAIRE 12 OF 36
CAPTIVEAIRE 13 OF 36
CAPTIVEAIRE 14 OF 36
CAPTIVEAIRE 15 OF 36
CAPTIVEAIRE 16 OF 36
CAPTIVEAIRE 17 OF 36
CAPTIVEAIRE 18 OF 36
CAPTIVEAIRE 19 OF 36
CAPTIVEAIRE 20 OF 36
CAPTIVEAIRE 21 OF 36
CAPTIVEAIRE 22 OF 36
CAPTIVEAIRE 23 OF 36
CAPTIVEAIRE 24 OF 36
CAPTIVEAIRE 25 OF 36
CAPTIVEAIRE 26 OF 36
CAPTIVEAIRE 27 OF 36
CAPTIVEAIRE 28 OF 36
CAPTIVEAIRE 29 OF 36
CAPTIVEAIRE 30 OF 36
CAPTIVEAIRE 31 OF 36
CAPTIVEAIRE 32 OF 36
CAPTIVEAIRE 33 OF 36
CAPTIVEAIRE 34 OF 36
CAPTIVEAIRE 35 OF 36
CAPTIVEAIRE 36 OF 36

GENERAL NOTES

1. ALL WORK SHALL CONFORM TO THE MICHIGAN DEPARTMENT OF TRANSPORTATION (MDOT) STANDARD SPECIFICATIONS FOR CONSTRUCTION, 2020 EDITION AND SUPPLEMENTAL SPECIFICATIONS, UNLESS OTHERWISE SPECIFIED IN THE PLANS OR SPECIFICATIONS.
2. THE CONTRACTOR SHALL BE RESPONSIBLE FOR FIELD VERIFYING ALL DIMENSIONS AND SITE CONDITIONS BEFORE PROCEEDING WITH WORK. IF DIMENSIONS ARE IN QUESTION, THE CONTRACTOR SHALL BE RESPONSIBLE FOR OBTAINING CLARIFICATION FROM THE ENGINEER BEFORE PROCEEDING.
3. THE CONTRACTOR SHALL BE REQUIRED TO RESTORE ALL EXISTING TURF AREAS WHICH ARE DISTURBED BY CONSTRUCTION ACTIVITIES THROUGHOUT THE PROJECT OR AS SPECIFIED. TURF AREAS SHALL MATCH ADJACENT GRADES IN ADDITION TO GRADES SPECIFIED. TURF RESTORATION CONSISTS OF: SCREENED TOPSOIL SURFACE, 6 INCH; CHEMICAL FERTILIZER NUTRIENT, IF REQUIRED; MDOT SEED MIXTURE TDS; STRAW MULCH BLANKETS AND MULCH ANCHORING. THE CONTRACTOR SHALL BE REQUIRED TO WATER TURF AREAS TO PROMOTE HEALTHY GROWTH UNTIL THE FIRST CUTTING. AT THAT TIME THE OWNER SHALL TAKE ALL RESPONSIBILITY FOR MAINTENANCE.
4. THE CONTRACTOR IS RESPONSIBLE TO RESTORE ANY AND ALL AREAS DISTURBED OR DAMAGED OUTSIDE OF THE OWNERS PROPERTY, AS A RESULT OF THE CONTRACTORS OPERATIONS, AT NO ADDITIONAL COST TO THE PROJECT.
5. THE CONTRACTOR SHALL COMPLY WITH ALL STATE AND LOCAL REGULATIONS AND ORDINANCES FOR WORK AT THE SITE. THIS SHALL INCLUDE ALL M.I.O.S.H.A. REGULATIONS.
6. THE CONTRACTOR SHALL CONTROL NOISE, CARRY OUT A PROGRAM FOR DUST CONTROL AND SHALL ALLOW NO ONSITE BURNING, WITHOUT PRIOR APPROVAL FROM THE OWNER, ENGINEER AND THE LOCAL FIRE DEPARTMENT.
7. THE CONTRACTOR SHALL BE RESPONSIBLE FOR FEES AND OBTAINING ANY REQUIRED PERMITS FOR WORKING WITHIN THE RIGHT-OF-WAY INCLUDING PAVEMENT REPLACEMENT, DRIVEWAY(S), SEWER TAPS, OFF STREET PARKING, SIDEWALK AND/OR ROAD CLOSURES, SIDEWALK AND CURB REPLACEMENT, ETC. THE CONTRACTOR SHALL PROVIDE THE LOCAL GOVERNING AUTHORITY AND/OR LOCAL MUNICIPALITY WITH ANY ROAD CLOSURE AND DETOUR PLAN, IF REQUIRED, PRIOR TO PROCEEDING WITH WORK. CONTACT GOVERNING AUTHORITY AND/OR LOCAL MUNICIPALITY FOR REQUIREMENTS BEFORE PROCEEDING WITH WORK.
8. THE CONTRACTOR SHALL BE RESPONSIBLE FOR ALL CONSTRUCTION STAKING AND LAYOUT FOR THIS PROJECT. THE CONTRACTOR SHALL PROTECT OR PLACE NEW BENCHMARKS AND/OR CONTROL POINTS, AS REQUIRED. AN ELECTRONIC COPY OF THE AUTOCAD ".DWG" FILE SHALL BE PROVIDED TO THE CONTRACTOR OR THEIR SURVEYOR.
9. ANY PROPERTY IRONS DAMAGED OR REMOVED BY THE CONTRACTORS OPERATIONS, SHALL BE REPLACED BY A SURVEYOR LICENSED IN THE STATE OF MICHIGAN AT NO COST TO THE PROJECT.
10. THE CONTRACTOR WILL BE REQUIRED TO COORDINATE THEIR WORK WITH THE BUILDING CONTRACTORS OR UTILITY COMPANIES' WORK AT NO ADDITIONAL COST TO THE PROJECT.
11. SITE CLEARING SHALL INCLUDE SURFACE DEBRIS, REMOVING ABOVE AND BELOW GROUND IMPROVEMENTS, ROCKS, DESIGNATED TREES, SHRUBS AND OTHER VEGETATION AND ABANDONED UTILITIES AS NECESSARY TO PERFORM THE WORK IN THE CONTRACT. ALL REMOVAL ITEMS SHALL BECOME THE PROPERTY OF THE CONTRACTOR UNLESS OTHERWISE SPECIFIED. THE CONTRACTOR SHALL PROTECT ALL SURVEY CONTROL POINTS, BENCHMARKS AND/OR EXISTING STRUCTURES TO REMAIN FROM DAMAGE OR DISPLACEMENT.
12. TREES IN THE INFLUENCE OF THE PROPOSED NEW WORK SHALL BE REMOVED. TREE REMOVAL SHALL INCLUDE COMPLETE REMOVAL OF THE STUMP AND INCLUDE REMOVAL OF ANY ROOTS WHICH ARE LOCATED WITHIN THE INFLUENCE OF THE SUBBASE EXCAVATION, BUILDING CONSTRUCTION AND UTILITY TRENCH EXCAVATION. WHEN EXCAVATING THROUGH ROOTS, PERFORM WORK BY HAND AND CUT ROOTS WITH A SHARP AXE.
13. THE CONTRACTOR SHALL BE RESPONSIBLE FOR THE DISPOSAL OF REMOVED, SURPLUS AND/OR WASTE MATERIAL FROM THE SITE. ALL TRANSPORTATION AND DISPOSAL OF THE REMOVED ITEMS SHALL BE DONE IN ACCORDANCE WITH THE SPECIFICATION AND ALL LOCAL, STATE AND FEDERAL LAWS.
14. SAW CUT EXISTING PAVEMENT TO FULL DEPTH PRIOR TO REMOVAL. WHERE SAW CUT IS REQUIRED IN CONCRETE SLABS AND/OR CURB & GUTTER, SAW CUT FULL DEPTH AT THE NEAREST JOINT. IF A SAWCUT EDGE BECOMES DAMAGED PRIOR TO THE INSTALLATION OF NEW WORK, THE EDGE SHALL BE RECUT, AS DIRECTED BY THE ENGINEER, AND THE PAVEMENT REPLACED AT NO ADDITION COST TO THE PROJECT.

TRAFFIC CONTROL AND MAINTENANCE

1. TRAFFIC SHALL BE MAINTAINED IN ACCORDANCE WITH THE MICHIGAN MANUAL OF UNIFORM TRAFFIC CONTROL DEVICES (MMUTCD), 2011 EDITION AND ALL CURRENT MDOT STANDARD PLANS, AS REQUIRED. THE CONTRACTOR SHALL SUBMIT A TRAFFIC MAINTENANCE PLAN TO THE ENGINEER FOR APPROVAL, 10 DAYS PRIOR TO BEGINNING WORK.
2. ALL SIGNS, BARRICADES, WARNING LIGHTS AND OTHER TRAFFIC CONTROL DEVICES SHALL BE IN ACCORDANCE WITH THE MMUTCD. SIGNING FOR STREET CLOSURES SHALL BE IN ACCORDANCE WITH THE MMUTCD. ANY SIGNS TEMPORARILY REMOVED DUE TO CONSTRUCTION ACTIVITIES, SHALL BE TEMPORARILY RELOCATED, AS DIRECTED BY THE ENGINEER, UNTIL FINAL RESTORATION IS COMPLETED AND THEN RETURNED TO THEIR ORIGINAL LOCATION.
3. DURING CONSTRUCTION ACTIVITIES, THE CONTRACTOR SHALL PLACE THE PROPER CONSTRUCTION SIGNING IN ACCORDANCE WITH THE CURRENT EDITIONS OF THE MICHIGAN MANUAL OF UNIFORM TRAFFIC CONTROL DEVICES (MMUTCD) AND ALL CURRENT MDOT STANDARD PLANS, AS REQUIRED.
4. THE CONTRACTOR SHALL PROVIDE THE LOCAL MUNICIPALITY WITH ANY ROAD CLOSURE AND DETOUR PLAN, IF REQUIRED, PRIOR TO PROCEEDING WITH WORK. CONTACT LOCAL MUNICIPALITY FOR REQUIREMENTS BEFORE PROCEEDING WITH WORK.

UTILITY NOTES

1. UTILITIES AND UTILITY SERVICE INFORMATION, SHOWN ON THE PLANS, ARE BASED ON UTILITY STAKING AND IS FOR INFORMATION ONLY, AS ACTUAL LOCATIONS MAY VARY. THE CONTRACTOR IS RESPONSIBLE FOR FIELD VERIFYING ALL UTILITY LOCATIONS BEFORE PROCEEDING WITH WORK.
2. FOR THE PROTECTION OF UNDERGROUND UTILTIES AND IN CONFORMANCE WITH PUBLIC ACT 174 OF 2013, THE CONTRACTOR IS REQUIRED TO CONTACT "MISS DIG" BY PHONE AT 811 OR 800-482-7171 OR VIA THE WEB AT EITHER ELOCATE.MISSDIG.ORG FOR SINGLE ADDRESS OR RTE.MISSDIG.ORG, A MINIMUM OF 72 HOURS (EXCLUDING SATURDAYS, SUNDAYS AND HOLIDAYS) IN ADVANCE OF ANY EXCAVATION.
3. THE CONTRACTOR WILL BE REQUIRED TO COORDINATE ALL OF THEIR WORK WITH THE UTILITY COMPANIES WORK, IF ANY, AT NO ADDITIONAL COST TO THE PROJECT.
4. COSTS AND FEES CHARGED BY THE UTILITY COMPANIES ARE THE RESPONSIBILITY OF THE CONTRACTOR AND ARE TO BE MADE A PART OF THE CONTRACT.
5. DAMAGE TO EXISTING UTILITIES, OUTSIDE THE SCOPE OF WORK SHOWN ON THE PLANS, IS THE RESPONSIBILITY OF THE CONTRACTOR AND REPAIR, AS SUCH, SHALL BE AT NO ADDITIONAL COST TO THE PROJECT.
6. IN CASES WHERE EXISTING SEWERS, DRAINS, GAS SERVICE CONNECTIONS, TELEPHONE OR ELECTRICAL FACILITIES, WATER SERVICE CONNECTIONS, ETC. ARE ENCOUNTERED, THE CONTRACTOR SHALL PERFORM THEIR WORK IN SUCH A MANNER THAT THE SERVICE WILL BE UNINTERRUPTED. THE CONTRACTORS METHOD FOR MAINTAINING AND SUPPORTING THE EXISTING UTILITIES AND THEIR SERVICE CONNECTIONS, IF REQUIRED, SHALL BE AS SUCH TO AVOID SETTLEMENT OF THE UTILITIES BEFORE AND AFTER PLACING BACKFILL.
7. STORM SEWER MATERIALS AND CONSTRUCTION SHALL CONFORM TO THE CITY OF HARBOR BEACH STANDARD SPECIFICATION FOR STORM WATER COLLECTION SYSTEMS.
8. SANITARY SEWER MATERIALS AND CONSTRUCTION SHALL CONFORM TO THE CITY OF HARBOR BEACH STANDARD SPECIFICATION FOR SANITARY SEWER COLLECTION SYSTEMS.
9. SEE ELECTRICAL, MECHANICAL AND PLUMBING PLANS FOR EXACT CONNECTIONS TO PROPOSED BUILDING UTILITIES.
10. UTILITY DISINFECTION AND ALL OTHER TESTING AS REQUIRED BY THE GOVERNING CODE IS THE RESPONSIBILITY OF THE CONTRACTOR.

EROSION CONTROL NOTES

1. THE SITE DISTURBANCE IS LESS THAN 1 ACRE IS SIZE AND MORE THAN 500 FT FROM A LAKE OR STREAM. THE SITE CONTRACTOR IS NOT RESPONSIBLE FOR OBTAINING A SOIL EROSION AND SEDIMENTATION CONTROL (SESC) PERMIT FOR THIS PROJECT. CONTACT THE SANILAC COUNTY DEPARTMENT OF CONSTRUCTION FOR MORE INFORMATION AND ANY REQUIREMENTS.
2. APPROPRIATE SOIL EROSION AND SEDIMENTATION CONTROL MEASURES SHALL BE IN PLACE PRIOR TO THE COMMENCEMENT OF EARTH DISTURBING ACTIVITIES AND SHALL REMAIN IN PLACE UNTIL ALL AREAS ARE FULLY RESTORED.
3. ALL SOIL EROSION & SEDIMENT CONTROL (SESC) MEASURES PLACED BY THE CONTRACTOR SHALL BE IN FULL COMPLIANCE WITH PUBLIC ACT 347 OF 1972 AS AMENDED AND THE ADMINISTRATIVE RULES. THE CONTRACTOR SHALL HAVE A DEQ CERTIFIED STORM WATER OPERATOR ASSIGNED TO THIS PROJECT.
4. A TRACKING PAD IS REQUIRED AT ANY CONTRACTOR INGRESS AND/OR EGRESS LOCATION WHERE SEDIMENT MAY BE TRACKED OFF-SITE. THE CONTRACTOR IS REQUIRED TO CLEAN ADJACENT STREETS OF ACCUMULATED SEDIMENT AS A RESULT OF THE CONTRACTORS ACTIVITY, AS DIRECTED BY THE ENGINEER, AT NO ADDITIONAL COST TO THE PROJECT.
5. INSTALL SEDIMENT CONTROL, INLET PROTECTION, FABRIC DROP (S58) AT EXISTING AND NEWLY CONSTRUCTED CATCH BASINS. AFTER RAIN EVENTS AND AT THE COMPLETION OF THE PROJECT, REMOVE AND CLEAN ALL ACCUMULATED SEDIMENT FROM THE CATCH BASINS.
6. AT THE COMPLETION OF THE PROJECT, ONCE ALL DISTURBED AREAS HAVE BEEN FULLY RESTORED, REMOVE ALL TEMPORARY EROSION CONTROL DEVICES AND ANY ACCUMULATED SEDIMENT.
7. THE CONTRACTOR SHALL REMOVE TEMPORARY MEASURES AS SOON AS PERMANENT STABILIZATION OF THE SITE HAS BEEN ESTABLISHED.
8. THE CONTRACTOR SHALL RESTORE DISTURBED AREAS AS SOON AS POSSIBLE.

MICHIGAN UNIFIED KEYING SYSTEM
SOIL EROSION AND SEDIMENTATION CONTROL

KEY	BEST MANAGEMENT PRACTICES	SYMBOL	WHERE USED
	SEDIMENT CONTROLS		
E2	GRUBBING OMITTED		FOR USE ON STEEP SLOPES TO PREVENT RILLING, GULLYING AND REDUCE SHEET FLOW VELOCITY OR WHERE CLEAR VISION CORRIDORS ARE NECESSARY.
E5	DUST CONTROL		FOR USE ON CONSTRUCTION SITES, UNPAVED ROADS, ETC. TO REDUCE DUST AND SEDIMENTATION FROM WIND AND CONSTRUCTION ACTIVITIES.
E6	MULCH		FOR USE ON IN AREAS SUBJECT TO EROSIVE SURFACE FLOWS OR SEVERE WIND OR ON NEWLY SEEDED AREAS.
E7	TEMPORARY SEEDING		STABILIZATION METHOD UTILIZED ON CONSTRUCTION SITES WHERE EARTH CHANGE HAS BEEN INITIATED BUT NOT COMPLETED WITHIN A 2 WEEK PERIOD.
E8	PERMANENT SEEDING		STABILIZATION METHOD UTILIZED ON SITES WHERE EARTH CHANGE HAS BEEN COMPLETED (FINAL GRADING ATTAINED).
E9	MULCH BLANKETS		ON EXPOSED SLOPES, NEWLY SEEDED AREAS, NEW DITCH BOTTOMS OR AREAS SUBJECT TO EROSION.
E10	SODDING		ON AREAS AND SLOPES WHERE IMMEDIATE STABILIZATION IS REQUIRED.
E12	RIPRAP		USE ALONG SHORELINES, WATERWAYS, OR WHERE CONCENTRATED FLOWS OCCUR. SLOWS VELOCITY, REDUCES SEDIMENT LOAD, AND REDUCES EROSION.
	EROSION CONTROLS		
S31	CHECK DAM		USED TO REDUCE SURFACE FLOW VELOCITIES WITHIN CONSTRUCTED AND EXISTING FLOW CORRIDORS.
S51	SILT FENCE		USED ADJACENT TO CRITICAL AREAS, TO PREVENT SEDIMENT LADEN SHEET FLOW FROM ENTERING THESE AREAS.
S53	STABILIZED CONSTRUCTION ENTRANCE		USED AT EVERY POINT WHERE CONSTRUCT TRAFFIC ENTERS OR LEAVES A CONSTRUCTION SITE.
S55	SEDIMENT BASIN		AT THE OUTLET OF DISTURBED AREAS AND AT THE LOCATION OF A PERMANENT DETENTION BASIN.
S56	SEDIMENT TRAP		IN SMALL DRAINAGE AREAS, ALONG CONSTRUCTION SITE PERMETERS AND ABOVE CHECK DAMS OR DRAIN INLETS.
S57	VEGETATED BUFFER/ FILTER STRIP		USE ALONG SHORELINES, WATERWAYS, OR OTHER SENSITIVE AREAS. SLOWS VELOCITY, REDUCES SEDIMENT LOAD, AND REDUCES EROSION IN AREAS OF SHEET FLOW.
S58	INLET PROTECTION FABRIC DROP		USE AT STORM WATER INLETS, ESPECIALLY AT CONSTRUCTION SITES.
S61	TURBIDITY CURTAIN		USED DURING CONSTRUCTION ADJACENT TO A WATER RESOURCE, TO CONTAIN SEDIMENT WITHIN THE WORK AREA WHEN OTHER BMP'S CANNOT BE USED.

PROPOSED SITE WORK

1. CONCRETE FOR SIDEWALKS, DUMPSTER PADS, CURB & GUTTER, ETC. SHALL MEET EITHER MDOT GRADE P1 OR S2 SPECIFICATION, UNLESS OTHERWISE SPECIFIED.
2. PLACE ½" EXPANSION JOINT BETWEEN SIDEWALKS AND ANY STRUCTURE. CUT CONTROL JOINTS AT 5' O.C. AND PLACE EXPANSION JOINTS AT 20' O.C. OR AS DIRECTED BY THE ENGINEER.
3. PLACE 1" FIBER JOINT AT 400' MAXIMUM INTERVAL IN CURB AND GUTTER. PLACE ½" EXPANSION JOINT BETWEEN CURB AND GUTTER AND CATCH BASINS. PLACE CONTRACTION JOINTS AT 40' MAXIMUM INTERVALS.
4. ADA RAMPS SHALL COMPLY WITH CURRENT MDOT STANDARD PLAN.
5. AREAS OF UNSTABLE SUBBASE NOT MEETING COMPACTION REQUIREMENTS, SHALL BE UNDERCUT AND BACKFILLED, IN ACCORDANCE WITH MDOT SUBGRADE UNDERCUTTING, TYPE II. THIS WORK SHALL BE MEASURED BY THE CUBIC YARD (CYD) AND SHALL BE PAID FOR AT THE CONTRACT UNIT PRICE FOR "SUBGRADE UNDERCUTTING".
6. CURB AND GUTTER RADII ARE DIMENSIONED FROM THE FRONT EDGE OF THE GUTTER PAN.

GRADING

1. FINAL GRADING SHALL PROVIDE POSITIVE DRAINAGE ACROSS THE ENTIRE SITE, AWAY FROM BUILDINGS, TO EXISTING OR PROPOSED CATCH BASINS, DRAINAGE SWALES/DITCHES, DETENTION/RETENTION BASIN(S) AND/OR INFILTRATION BASIN(S).
2. THE CONTRACTOR SHALL GRADE THE SITE ACCORDING TO THE GRADING PLAN. IN THE ABSENCE OF A PLAN, THE CONTRACTOR IS TO GRADE THE SITE SO THAT THE NEW GRADES BLEND GENTLY INTO THE EXISTING GRADES. CONTRACTOR TO SLOPE GRADE AWAY FROM BUILDINGS A MINIMUM OF 2 INCHES IN 10 FEET.
3. MAINTAIN OPTIMUM MOISTURE CONTENT OF MATERIALS WHEN GRADING.

NOTES APPLYING TO STANDARD PLANS & SPECIAL DETAILS

WHERE THE FOLLOWING ITEMS ARE CALLED FOR ON THE PLANS., THEY ARE TO BE CONSTRUCTED ACCORDING TO THE MICHIGAN DEPARTMENT OF TRANSPORTATION (MDOT) STANDARD PLAN LISTED BELOW, UNLESS NOTED OTHERWISE. COPIES OF THESE MDOT STANDARD PLANS CAN BE OBTAINED FROM THE MDOT WEBSITE (WWW.MICHIGAN.GOV/MDOT).

ROAD STANDARD PLANS:

R-1-G	DRAINAGE STRUCTURES
R-28-K	SIDEWALK RAMP AND DETECTABLE WARNING DETAILS
R-29-J	DRIVEWAY OPENINGS & APPROACHES AND CURB AND GUTTER
R-30-G	CONCRETE CURB AND CONCRETE CURB & GUTTER
R-37-B	ISOLATION JOINT DETAILS
R-74-D	BUMPER & PARKING RAILS AND MISC. WOOD POSTS
R-82-D	BEDDING AND FILLING AROUND PIPE CULVERTS
R-83-C	UTILITY TRENCHES
R-95-G	CULVERT SLOPED END SECTION
R-96-E	SOIL EROSION & SEDIMENTATION CONTROL MEASURES
R-107-H	SUPERELEVATION AND PAVEMENT CROWNS

ROAD SPECIAL DETAILS:

R-80-F	GRANULAR BLANKET, UNDERDRAINS, OUTLET ENDINGS FOR UNDERDRAINS, AND SEWER BULKHEADS
R-100-I	SEEDING AND TREE PLANTING

PAVEMENT MARKING STANDARD PLANS:

PAVE-900-F	PAVEMENT ARROW AND MESSAGE DETAILS
PAVE-905-D	LONGITUDINAL LINE TYPES AND PLACEMENT
PAVE-930-C	PAVEMENT MARKINGS FOR NON-SIGNALIZED INTERSECTIONS
PAVE-935-D	LEFT TURN LANE MARKINGS
PAVE-940-C	RIGHT TURN LANE AND ISLAND PAVEMENT MARKINGS
PAVE-945-C	INTERSECTION, STOP BAR AND CROSSWALK MARKINGS
PAVE-955-B	ON-STREET PARKING ZONE MARKINGS
PAVE-956-C	PARKING AREA PAVEMENT MARKINGS
PAVE-957-A	BACK-IN ANGLE PARKING
PAVE-960-B	SCHOOL MARKINGS
PAVE-965-D	RAILROAD GRADE CROSSING PAVEMENT MARKINGS

TRAFFIC SIGNING STANDARD PLANS:

SIGN-100-G	STANDARD SIGN INSTALLATIONS
SIGN-115-D	SIGN LOCATION CODES PLACEMENT
SIGN-120-E	ROADSIDE SIGN LOCATIONS AND SUPPORT SPACING
SIGN-130-B	RAILROAD CROSSING SIGN
SIGN-150-D	SIGN SUPPORT SELECTION CHARTS
SIGN-200-E	STEEL POSTS
SIGN-207-D	PERFORATED STEEL SQUARE TUBE SIGN BREAKAWAY SYS
SIGN-210-B	WOOD POSTS
SIGN-230-A	FOUNDATION (BREAK-AWAY)
SIGN-740-B	MISCELLANEOUS SIGN CONNECTION DETAILS

PARKING

NO CHANGES TO THE PARKING LOT/AMOUNT OF PARKING STALLS ARE PROPOSED IN THIS PROJECT

EXISTING UTILITIES

TELEPHONE
FRONTIER NORTH, INC
PHONE: 800.921.8102
EMAIL:

ELECTRIC
DTE ELECTRIC COMPANY
PHONE: 800.477.4747

GAS
CONSUMERS ENERGY COMPANY
PHONE: 800.477.5050

WATER & SEWER
CITY OF HARBOR BEACH
766 STATE STREET
HARBOR BEACH, MI 48441
PHONE:989.479.3363

HARBOR BEACH FIRE DEPARTMENT
202 N. HURON AVE
HARBOR BEACH, MI
PHONE:989.479.3679

LEGEND

2.00%	GRADE
	EXISTING CONTOUR
	PROPOSED CONTOUR
	INTEGRAL CURB
	INTEGRAL CURB/BACK OF CURB TAPER TO MATCH GRADE
EXISTING ELEVATION	582.34
PROPOSED ELEVATION	582.63 EB
GND	GROUND
BDG	BUILDING
ADJ	ADJUST ITEM
EB	EDGE OF HMA
EC	EDGE OF CONCRETE
IE	INVERT ELEVATION
BW	BACK OF WALK
FW	FACE OF WALK
TW	TOP OF WALK
EX	EXISTING
PR	PROPOSED
LF	LINEAR FEET
MP	MID POINT
PC	POINT OF CURVATURE
FFE	FINISHED FLOOR ELEVATION
TR	TOP OF ROCK
GRV	GRAVEL
CB	CATCH BASIN
MH	MANHOLE
STM	STORM SEWER
SAN	SANITARY SEWER
REM	REMOVE ITEM
REL	RELOCATE ITEM
FL	FLOW LINE
BC	BACK OF CURB

MISS DIG 811
Know what's below.
Call before you dig.

MARQUETTE OFFICE:
1221 W. BARAGA AVENUE
MARQUETTE, MI 49855
PHONE: 906.226.9480 FAX: 906.226.7524

BRIGHTON OFFICE:
8711 W. GRAND RIVER AVE., SUITE 200
BRIGHTON, MICHIGAN 48116
PHONE: 810.225.2701 FAX: 810.225.4797

ARCHITECTURE
ENGINEERING
CONSULTING
INTEGRATED DESIGNS, INC.

HARBOR BEACH SOMMUNITY SCHOOLS
2025 BOND PROJECT - PHASE 1
HARBOR BEACH, MI
PROJECT NO. 24-138

	BY	NO.	REVISIONS	DATE
DESIGN	BLK	0	FOR CONSTRUCTION	08.28.26
DRAWN	BLK	----	----	----
CHECKED	ADM	----	----	----
APPROVED	BLK	----	----	----

CIVIL NOTES

COPYRIGHT © 2025 INTEGRATED DESIGNS INC.

C0.1

FILE LOCATION: F:\24-138 HARBOR BEACH SCHOOL BOND 2025\04\WINGS\CV\LAYH.(1)
PLOT TIME: 8/29/2026 8:15:42 AM

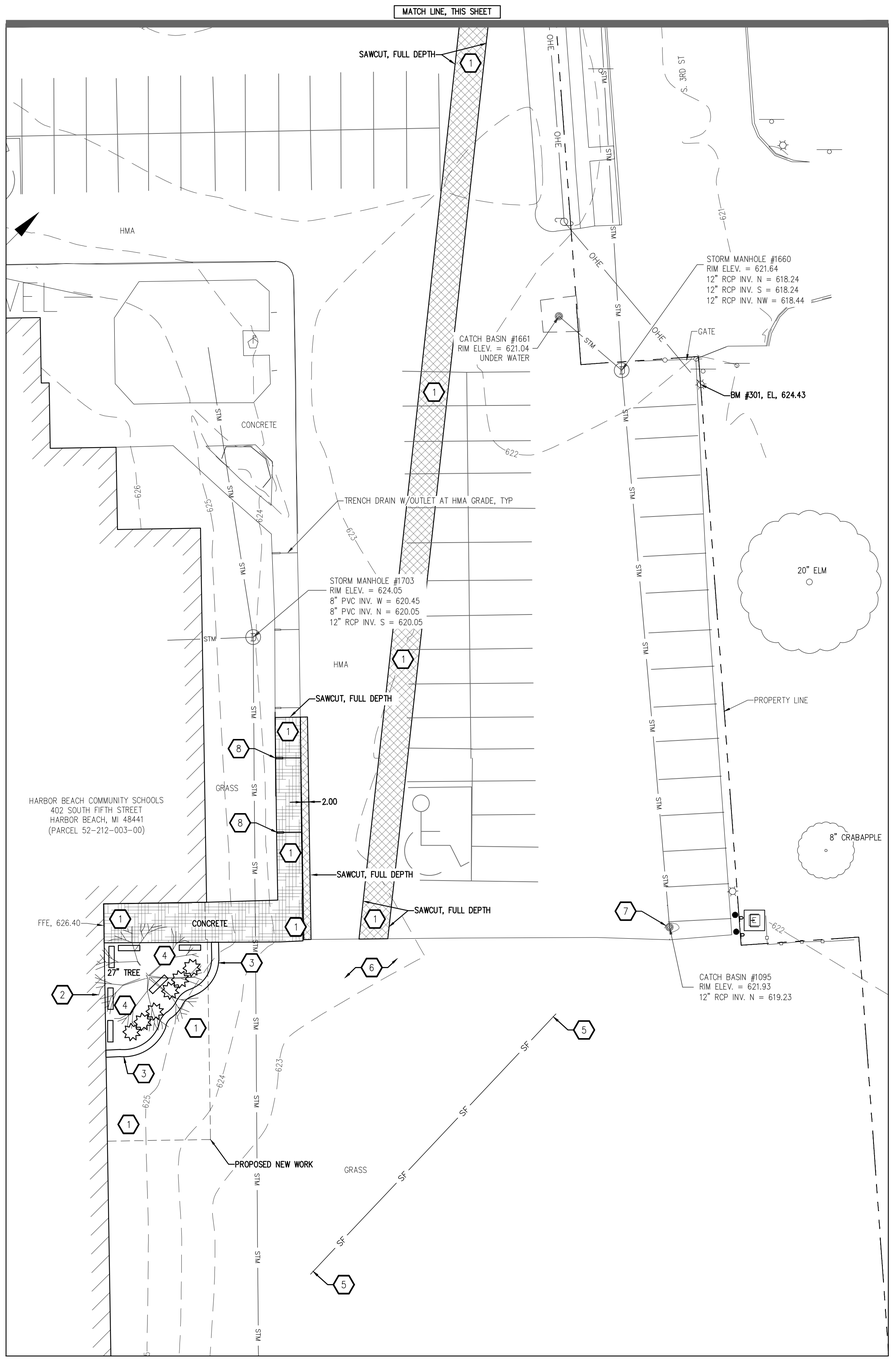

DEMOLITION PLAN, SOUTH

SCALE: 1 INCH = 20 FEET

GRAPHIC SCALE: 1 inch = 20 feet (0, 10, 20, 40, 60)

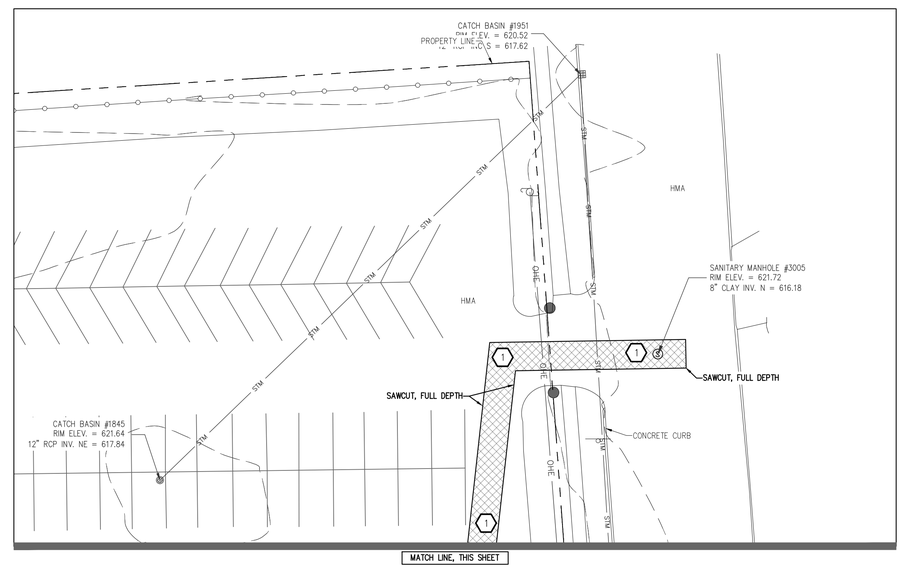

DEMOLITION PLAN, NORTH

SCALE: 1 INCH = 20 FEET

GRAPHIC SCALE: 1 inch = 20 feet (0, 10, 20, 40, 60)

KEY NOTES

– SEE CURRENT MDOT SPECIFICATIONS FOR MATERIALS AND INSTALLATION REQUIREMENTS UNLESS OTHERWISE SPECIFIED –
– ALL KEYNOTES SHOWN ON THIS SHEET ARE SPECIFIC TO THIS SHEET ONLY –

1. REMOVE EXISTING HMA, CONCRETE SIDEWALKS & SLABS, TOPSOIL AND UNDERLYING MATERIAL AS REQUIRED FOR NEW WORK. SAWCUT EXISTING PAVEMENT TO FULL DEPTH PRIOR TO REMOVAL. SAWCUT(S) IN CONCRETE SHALL BE AT THE NEAREST JOINT.
2. REMOVE ±27 INCH DIAMETER TREE AND ALL ROOTS.
3. REMOVE LANDSCAPE RETAINING BLOCK WALL.
4. REMOVE LANDSCAPE SHRUBS & PLANTINGS, ALL ROOTS, GRAVEL, UNDERLYING MATERIAL, AND SIX BENCHES, INCLUDEING FOUNDATIONS.
5. INSTALL ±100 LF OF SILT FENCE AS NECESSARY TO PREVENT SEDIMENT FROM LEAVING THE SITE. MAINTAIN UNTIL COMPLETION OF PROJECT AND REMOVE ONCE ALL PERMANENT SESC MEASURES ARE IN PLACE. SEE DETAIL SHEET.
6. INSTALL STABILIZED CONSTRUCTION PAD FOR SEDIMENT CONTROL AT ALL SET ENTRANCES AND EXITS. LOCATION SHOWN IS FOR REFERENCE ONLY AND CONTRACTOR SHALL DETERMINE EXACT PLACEMENT LOCATION(S). SEE DETAIL SHEET.
7. INSTALL INLET PROTECTION FABRIC DROP AND MAINTAIN UNTIL PERMANENT SESC PROTECTIONS ARE IN PLACE. THEN REMOVE FABRIC AND CLEAN ANY SEDIMENT & DEBRIS FROM SUMP.
8. REMOVE TRENCH DRAIN & DISCHARGE LOCATED IN SIDEWALK.

LEGEND

CONCRETE REMOVAL
HMA REMOVAL

INTEGRATED DESIGNS, INC.
ARCHITECTURE ENGINEERING CONSULTING
MARQUETTE OFFICE:
1021 W. BARAGA AVENUE
MARQUETTE, MI 49855
PHONE: (906)228-4480 FAX: (906)228-7524
BRIGHTON OFFICE:
831 W. GRAND RIVER AVE., SUITE 200
BRIGHTON, MICHIGAN 48116
PHONE: (810)225-3701 FAX: (810)225-4797

HARBOR BEACH SOMMUNITY SCHOOLS
2025 BOND PROJECT - PHASE 1
HARBOR BEACH, MI

PROJECT NO. 24-138

	BY	NO.	REVISIONS	DATE
DESIGN	BLK	0	FOR CONSTRUCTION	08.28.26
DRAWN	BLK	----	----	----
CHECKED	ADM	----	----	----
APPROVED	BLK	----	----	----

DEMOLITION PLAN

COPYRIGHT © 2025 INTEGRATED DESIGNS INC.

MISS DIG 811
Know what's below. Call before you dig.

C1.0

FILE LOCATION: F:\24-138 HARBOR BEACH SCHOOL BOND 2025\DRAWINGS\CIVIL\PH-01
PLOT TIME: 8/28/2026 8:15:42 AM

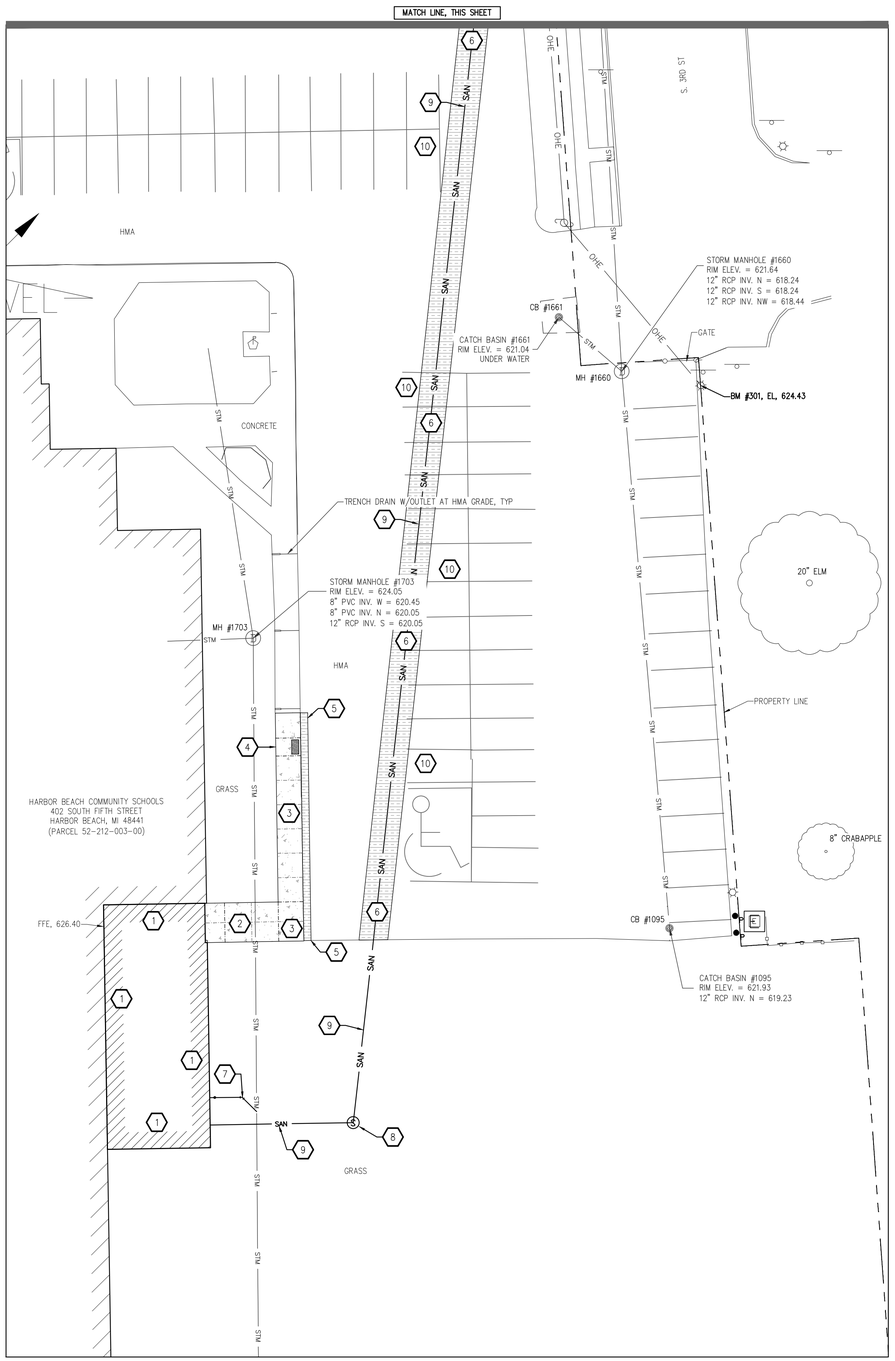

SITE PLAN, SOUTH

SCALE: 1 INCH = 20 FEET

GRAPHIC SCALE: 1 inch = 20 feet

0 10 20 40 60

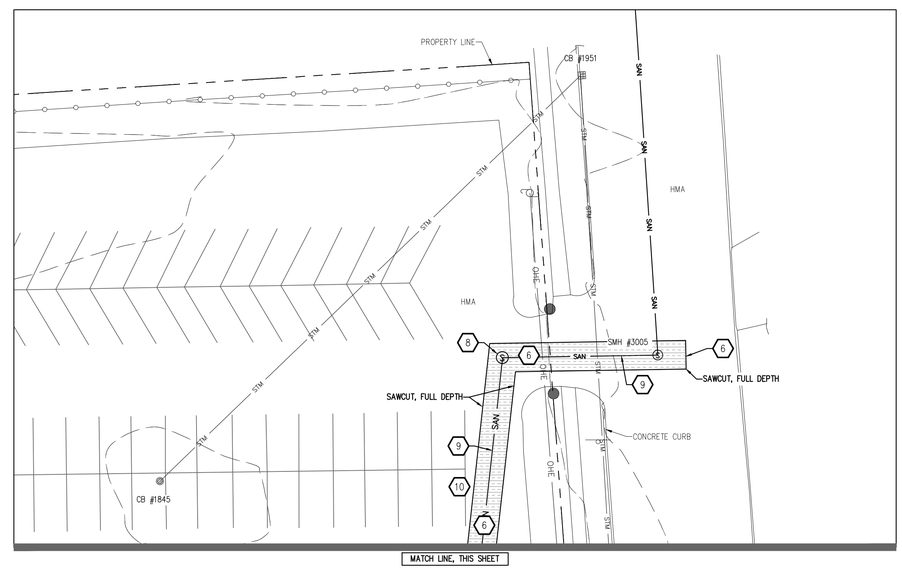

SITE PLAN, NORTH

SCALE: 1 INCH = 20 FEET

GRAPHIC SCALE: 1 inch = 20 feet

0 10 20 40 60

KEY NOTES

– SEE CURRENT MDOT SPECIFICATIONS FOR MATERIALS AND INSTALLATION REQUIREMENTS UNLESS OTHERWISE SPECIFIED –
– ALL KEYNOTES SHOWN ON THIS SHEET ARE SPECIFIC TO THIS SHEET ONLY –

1. PROPOSED SINGLE STORY ADDITION. REFER TO ARCHITECTURAL & STRUCTURAL DRAWINGS.
2. PLACE SIDEWALK, 6 INCH THICK REINFORCED CONCRETE ON SUB-BASE, 6" CIP MDOT CLASS II. REINFORCEMENT SHALL BE WWF, 6X6, W2.1XW2.1. SEE DETAIL SHEET.
3. PLACE MONOLITHIC FACED SIDEWALK, 6 INCH THICK REINFORCED CONCRETE ON SUB-BASE, 6" CIP MDOT CLASS II. REINFORCEMENT SHALL BE WWF, 6X6, W2.1XW2.1. SEE DETAIL SHEET.
4. PLACE A BARRIER FREE ACCESS RAMP WITH 24 INCH WIDE DETECTABLE WARNING STRIP.
5. HAND PATCH HMA.
6. PLACE UTILITY TRENCH PATCH CONSISTING OF SUBBASE, 12 INCH MDOT CLASS II, AGGREGATE BASE, 8 INCH MDOT 21AA, AND HMA, 3 INCH MDOT 4EL.
7. CONNECT TO PROPOSED 4 INCH PVC ROOF DRAIN WITH ECCENTRIC 4 INCH TO 6 INCH FITTING 5 FT FROM FOUNDATION. INSTALL ±15 LF OF 6 INCH SDR26 STORM SEWER AND CONNECT TO EXISTING 12 INCH RCP WITH A 12x12x6 WYE AND FERNCO, OR APPROVED OTHER, WATERTIGHT FITTING. INCLUDE CLEAN-OUT.
8. INSTALL 4 FT DIAMETER SANITARY MANHOLE, (2) TOTAL. SEE GRADING & UTILITY AND DETAIL SHEETS.
9. CONNECT TO PROPOSED 4 INCH PVC SANITARY SEWER WITH ECCENTRIC 4 INCH TO 6 INCH FITTING 5 FT FROM FOUNDATION. INSTALL ±450 LF OF 6 INCH SDR26 SANITARY SEWER. SEE GRADING & UTILITY AND DETAIL SHEETS.
10. RE-MARK PARKING LOT LINES DISTURBED FOR SEWER INSTALLATION. PAVEMENT MARKINGS SHALL BE, 4 INCH, YELLOW, WATERBORNE, FROM MDOT QUALIFIED PRODUCTS LIST.

LEGEND

PROPOSED HMA — PROPOSED CONCRETE

MARQUETTE OFFICE:
1021 W. BARAGA AVENUE
MARQUETTE, MI 49855
PHONE: (906)228-4480 FAX: (906)228-7524

BRIGHTON OFFICE:
831 W. GRAND RIVER AVE., SUITE 200
BRIGHTON, MICHIGAN
PHONE: (810)225-3701 FAX: (810)225-4797

ARCHITECTURE ENGINEERING CONSULTING
INTEGRATED DESIGNS, INC.

HARBOR BEACH SOMMUNITY SCHOOLS
2025 BOND PROJECT - PHASE 1
HARBOR BEACH, MI

PROJECT NO. 24-138

	BY	NO.	REVISIONS	DATE
DESIGN	BLK	0	FOR CONSTRUCTION	08.28.26
DRAWN	BLK	---	---	---
CHECKED	ADM	---	---	---
APPROVED	BLK	---	---	---

SITE PLAN

COPYRIGHT © 2025 INTEGRATED DESIGNS INC.

MISS DIG 811.
Know what's below. Call before you dig.

C2.0

FILE LOCATION: F:\24-138 HARBOR BEACH SCHOOL BOND 2025\DRAWINGS\SITE\PH-01
PLOT TIME: 8/26/2026 8:15:42 AM

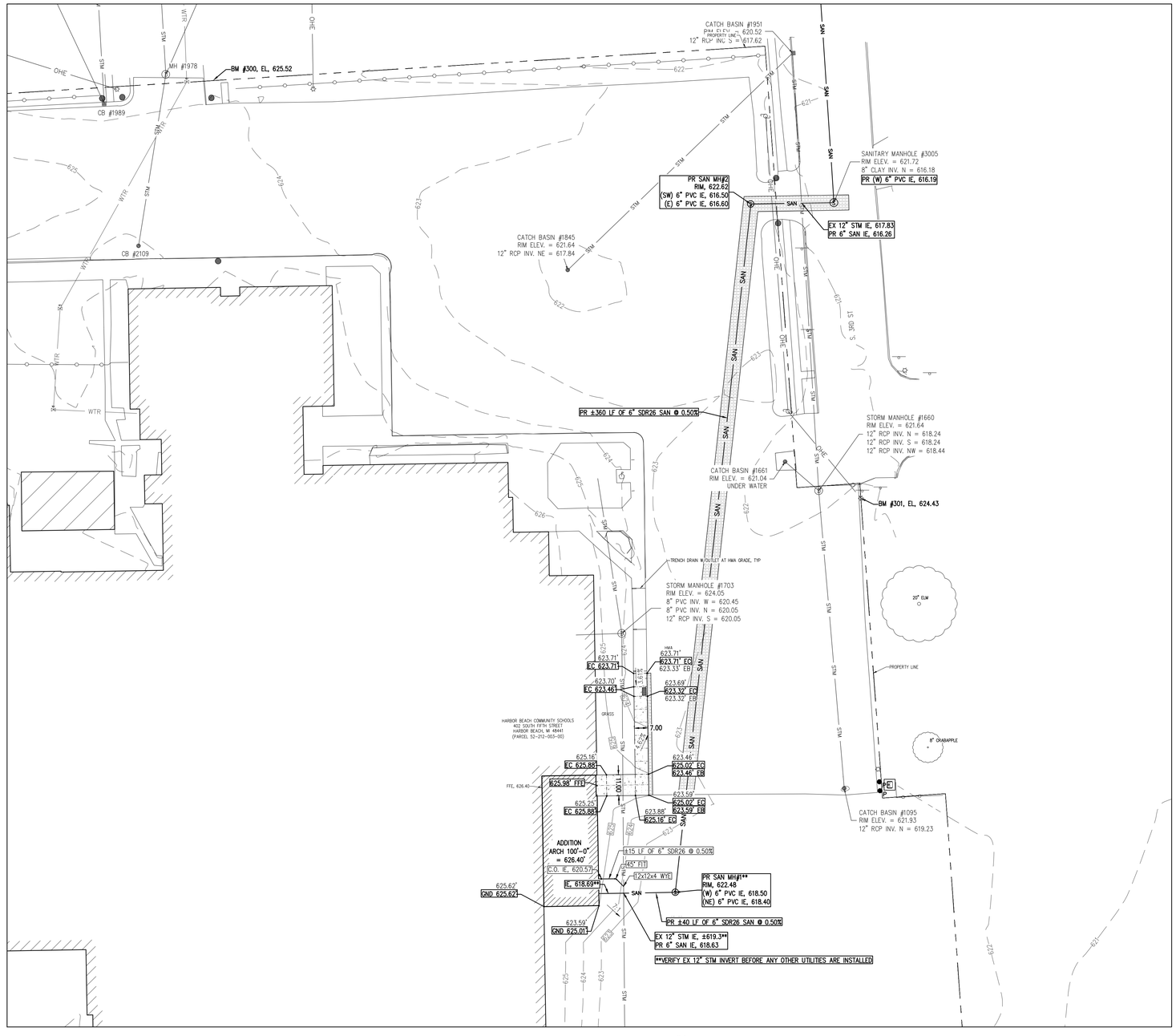

GRADING & UTILITY PLAN

SCALE: 1 INCH = 30 FEET

GRAPHIC SCALE: 1 inch = 30 feet

0 15 30 60 90

N

LEGEND

2.00%	GRADE
	EXISTING CONTOUR
	PROPOSED CONTOUR
	INTEGRAL CURB
	INTEGRAL CURB/BACK OF CURB TAPER TO MATCH GRADE
EXISTING ELEVATION	582.34
PROPOSED ELEVATION	582.63 EB
GND	GROUND
BDG	BUILDING
ADJ	ADJUST ITEM
EB	EDGE OF HMA
EC	EDGE OF CONCRETE
IE	INVERT ELEVATION
BW	BACK OF WALK
FW	FACE OF WALK
TW	TOP OF WALK
EX	EXISTING
PR	PROPOSED
LF	LINEAR FEET
MP	MID POINT
PC	POINT OF CURVATURE
FFE	FINISHED FLOOR ELEVATION
TR	TOP OF ROCK
GRV	GRAVEL
CB	CATCH BASIN
MH	MANHOLE
STM	STORM SEWER
SAN	SANITARY SEWER
REM	REMOVE ITEM
REL	RELOCATE ITEM
FL	FLOW LINE
BC	BACK OF CURB

LEGEND

PROPOSED HMA

PROPOSED CONCRETE

INTEGRATED DESIGNS, INC.
ARCHITECTURE ENGINEERING CONSULTING

MARQUETTE OFFICE:
1021 W. BARAGA AVENUE
MARQUETTE, MI 49855
PHONE: (906)228-4480 FAX: (906)228-7524

BRIGHTON OFFICE:
8811 W. GRAND RIVER AVE., SUITE 600
BRIGHTON, MICHIGAN 48116
PHONE: (810)225-3701 FAX: (810)225-4797

HARBOR BEACH SOMMUNITY SCHOOLS
2025 BOND PROJECT - PHASE 1
HARBOR BEACH, MI

PROJECT NO. 24-138

	BY	NO.	REVISIONS	DATE
DESIGN	BLK	0	FOR CONSTRUCTION	08.28.26
DRAWN	BLK	---	---	---
CHECKED	ADM	---	---	---
APPROVED	BLK	---	---	---

GRADING & UTILITY PLAN
SANITARY SEWER OPTIONS

COPYRIGHT © 2025 INTEGRATED DESIGNS INC.

C3.0

MISS DIG 811
Know what's below. Call before you dig.

FILE LOCATION: F:\24-138 HARBOR BEACH SCHOOL BOND 2025\DRAWINGS\CIVIL\PH-1\
PLOT TIME: 8/26/2026 8:19:42 AM

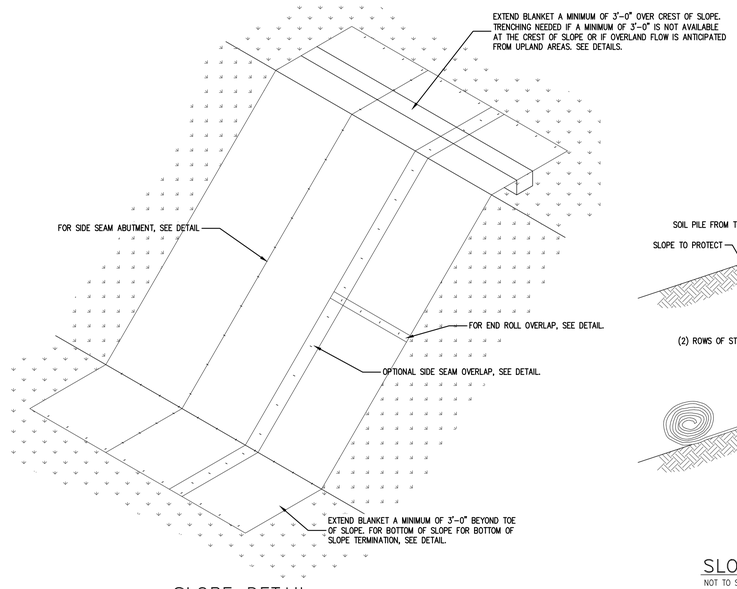

SLOPE DETAIL
NOT TO SCALE

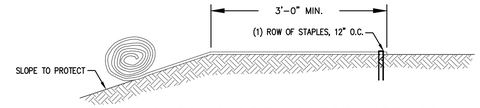

OVER SLOPE, CREST METHOD
NOT TO SCALE

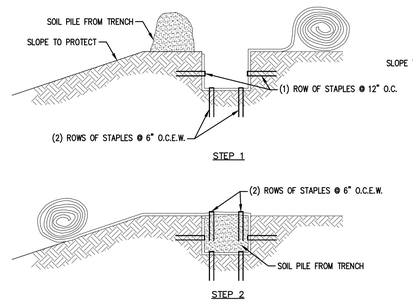

SLOPE TRENCHING METHOD "A" IS ONLY REQUIRED IF THE CREST OF THE SLOPE IS LESS THAN 3'-0"

SLOPE TRENCHING METHOD "A"
NOT TO SCALE

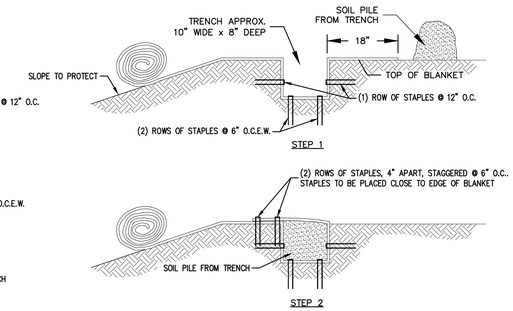

SLOPE TRENCHING METHOD "B"
NOT TO SCALE

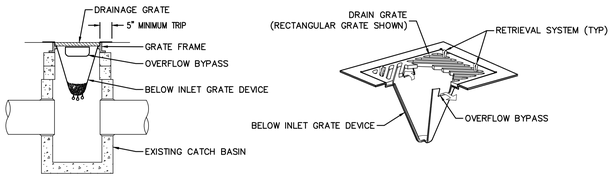

INLET PROTECTION FABRIC DROP
NO SCALE

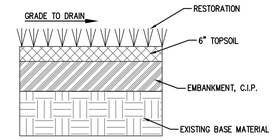

NOTE: SLOPES LESS THAN 4H:1V, STABILIZATION SHALL BE ACCOMPLISHED WITH SEED AND STRAW MULCH WITH A TACKIFIER OR STRAW BLANKETS PEGGED IN PLACE.

SLOPES 4H:1V AND GREATER, STABILIZATION SHALL BE ACCOMPLISHED WITH SEED AND EXCELSIOR MULCH BLANKET.

SEEDING RATE = 210 LBS PER ACRE MINIMUM
FERTILIZER RATE = 150 LBS PER ACRE MINIMUM
MULCHING RATE = MINIMUM 3" DEPTH (1.5 – 2.0 TONS PER ACRE)

TURF RESTORATION DETAIL
NOT TO SCALE

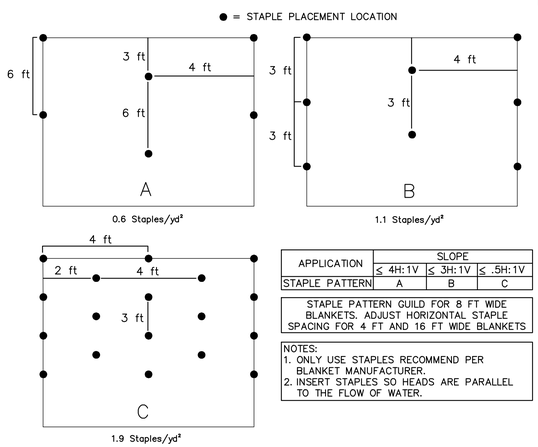

APPLICATION	SLOPE		
	≤ 4H:1V	≤ 3H:1V	≤ .5H:1V
STAPLE PATTERN	A	B	C

STAPLE PATTERN GUILD FOR 8 FT WIDE BLANKETS. ADJUST HORIZONTAL STAPLE SPACING FOR 4 FT AND 16 FT WIDE BLANKETS

NOTES:
1. ONLY USE STAPLES RECOMMEND PER BLANKET MANUFACTURER.
2. INSERT STAPLES SO HEADS ARE PARALLEL TO THE FLOW OF WATER.

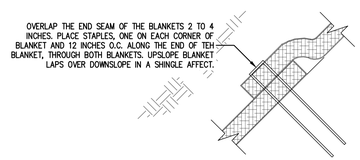

END ROLL OVERLAP
NOT TO SCALE

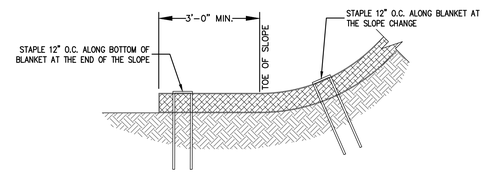

SLOPE BOTTOM TERMINATION
NOT TO SCALE

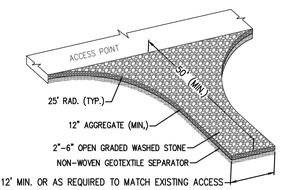

STABILIZED CONSTRUCTION ENTRANCE DETAIL
NOT TO SCALE

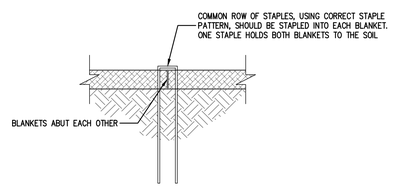

SIDE SEAM ABUT, STAPLE DETAIL
NOT TO SCALE

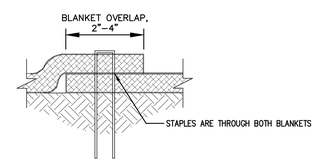

SIDE SEAM OVERLAP, STAPLE DETAIL
NOT TO SCALE

NOTES:
1. TEMPORARY SILT FENCE SHALL BE INSTALLED PRIOR TO ANY GRADING WORK IN THE AREA TO BE PROTECTED. FENCE SHALL BE MAINTAINED THROUGHOUT THE CONSTRUCTION PERIOD AND REMOVED IN CONJUNCTION WITH THE FINAL GRADING AND SITE STABILIZATION.
2. FILTER FABRIC SHALL MEET THE REQUIREMENTS OF MATERIAL SPECIFICATION 592 GEOTEXTILE TABLE 1 OR 2, CLASS L WITH EQUIVALENT OPENING SIZE OF AT LEAST 30 FOR NONWOVEN AND 50 FOR WOVEN.
3. FENCE POSTS SHALL BE EITHER WOOD POST WITH A MINIMU CROSS-SECTIONAL AREA OF 1.5" X 1.5" OR A STANDARD STEEL POST.
4. WHEN SPLICES ARE NECESSARY MAKE SPLICE AT POST ACCORDING TO SPLICE DETAIL. PLACE THE END POST OF THE SECOND FENCE INSIDE THE END POST OF THE FIRST FENCE. ROTATE BOTH POSTS TOGETHER AT LEAST 180 DEGREES TO CREATE A TIGHT SEAL WITH THE FABRIC MATERIAL. CUT THE FABRIC NEAR THE BOTTOM OF THE POSTS TO ACCOMMODATE THE 6 INCH FLAP. THEN DRIVE BOTH POSTS AND BURY THE FLAP. COMPACT BACKFILL WELL.

DETAIL MODIFIED FROM NRCS-IL STANDARD DRAWING NRCS141P2_029360

SLOPE PROTECTION, EXCELSIOR MULCH BLANKET
NOT TO SCALE

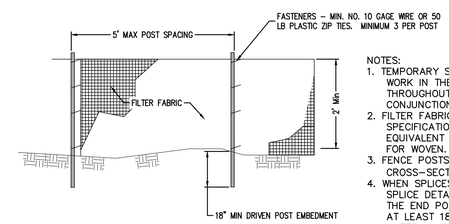

ELEVATION

NOTES:
1. TEMPORARY SILT FENCE SHALL BE INSTALLED PRIOR TO ANY GRADING WORK IN THE AREA TO BE PROTECTED. FENCE SHALL BE MAINTAINED THROUGHOUT THE CONSTRUCTION PERIOD AND REMOVED IN CONJUNCTION WITH THE FINAL GRADING AND SITE STABILIZATION.
2. FILTER FABRIC SHALL MEET THE REQUIREMENTS OF MATERIAL SPECIFICATION 592 GEOTEXTILE TABLE 1 OR 2, CLASS L WITH EQUIVALENT OPENING SIZE OF AT LEAST 30 FOR NONWOVEN AND 50 FOR WOVEN.
3. FENCE POSTS SHALL BE EITHER WOOD POST WITH A MINIMU CROSS-SECTIONAL AREA OF 1.5" X 1.5" OR A STANDARD STEEL POST.
4. WHEN SPLICES ARE NECESSARY MAKE SPLICE AT POST ACCORDING TO SPLICE DETAIL. PLACE THE END POST OF THE SECOND FENCE INSIDE THE END POST OF THE FIRST FENCE. ROTATE BOTH POSTS TOGETHER AT LEAST 180 DEGREES TO CREATE A TIGHT SEAL WITH THE FABRIC MATERIAL. CUT THE FABRIC NEAR THE BOTTOM OF THE POSTS TO ACCOMMODATE THE 6 INCH FLAP. THEN DRIVE BOTH POSTS AND BURY THE FLAP. COMPACT BACKFILL WELL.

DETAIL MODIFIED FROM NRCS-IL STANDARD DRAWING NRCS141P2_029360

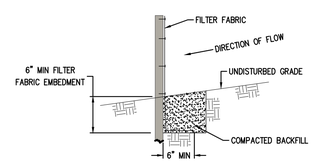

FABRIC ANCHOR DETAIL

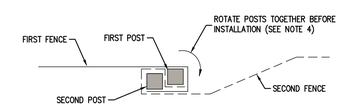

SPLICE DETAIL–PLAN VIEW

SILT FENCE INSTALLATION DETAILS
NO SCALE

ARCHITECTURE ENGINEERING CONSULTING
INTEGRATED DESIGNS, INC.
MARQUETTE OFFICE: 1021 W. BARAGA AVENUE MARQUETTE, MI 49855 PHONE: (906)228-4480 FAX: (906)228-7524
BRIGHTON OFFICE: 831 W. GRAND RIVER AVE., SUITE 200 BRIGHTON, MI 48116 PHONE: (810)229-7701 FAX: (810)229-5797

HARBOR BEACH SOMMUNITY SCHOOLS
2025 BOND PROJECT - PHASE 1
HARBOR BEACH, MI
PROJECT NO. 24-138

NO.	REVISIONS	DATE
0	FOR CONSTRUCTION	08.28.26

	BY
DESIGN	BLK
DRAWN	BLK
CHECKED	ADM
APPROVED	BLK

CIVIL DETAILS

COPYRIGHT © 2025 INTEGRATED DESIGNS INC.

C4.0

FILE LOCATION: F:\24-138 HARBOR BEACH SCHOOL BOND 2025\DRAWINGS\CIVIL\PH 1
PLOT TIME: 8/29/2026 8:53:42 AM

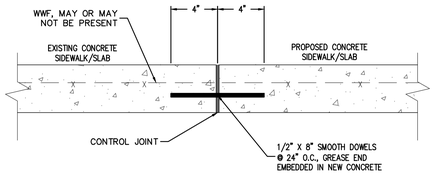

EXISTING & PROPOSED CONCRETE INTERFACE

NOT TO SCALE

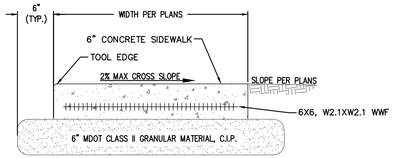

CONCRETE SIDEWALK

NOT TO SCALE

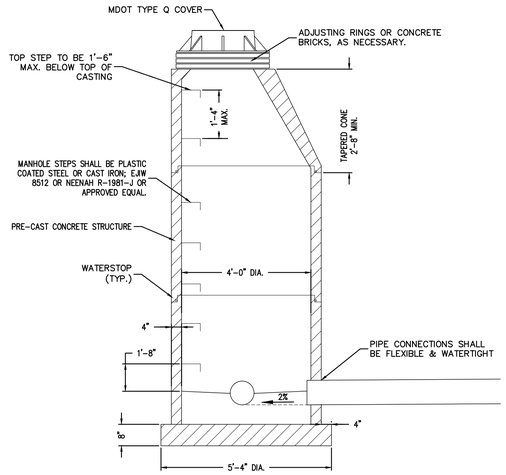

STANDARD CONCRETE MANHOLE

NOT TO SCALE

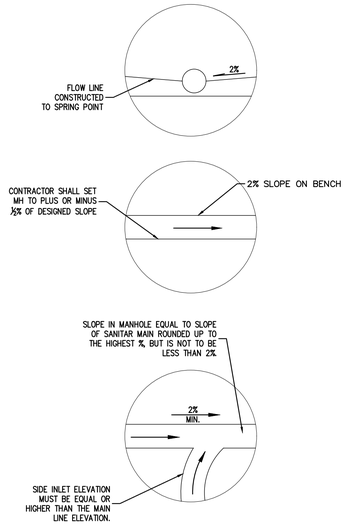

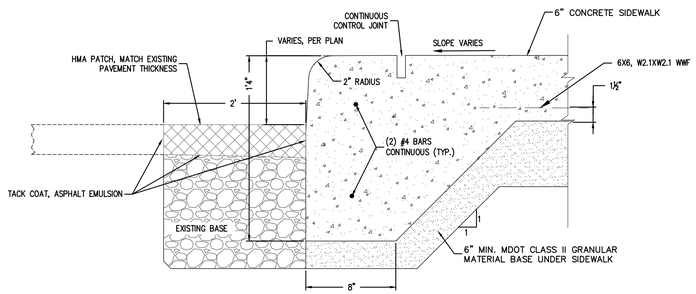

SIDEWALK WITH INTEGRAL CURB/HMA PATCH DETAIL

NOT TO SCALE

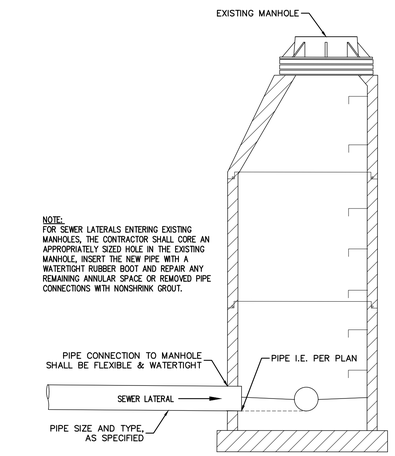

CONNECTION TO EXISTING MANHOLE

NOT TO SCALE

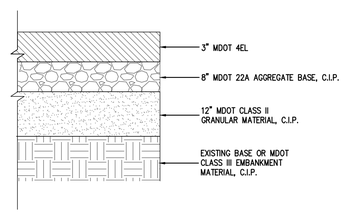

TYPICAL PAVEMENT PATCH

NOT TO SCALE

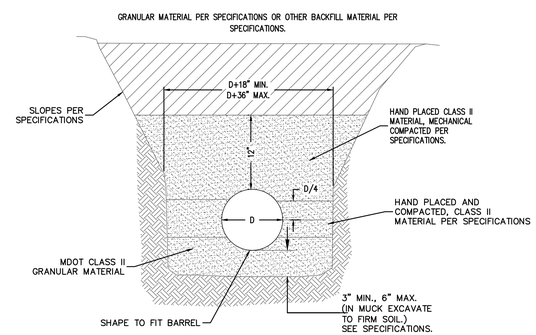

THE BACKFILL MATERIALS AND METHODS SHALL CONFORM WITH THE SPECIFICATIONS.

UTILITY TRENCH

NOT TO SCALE

MARQUETTE OFFICE:
1021 W. BARAGA AVENUE
MARQUETTE, MI 49855
PHONE: (906)228-6480 FAX: (906)228-7324

BRIGHTON OFFICE:
8317 W. GRAND RIVER AVE., SUITE 200
BRIGHTON, MI 48116
PHONE: (810)229-7701 FAX: (810)229-5797

INTEGRATED DESIGNS, INC.
ARCHITECTURE ENGINEERING CONSULTING

HARBOR BEACH SOMMUNITY SCHOOLS
2025 BOND PROJECT - PHASE 1
HARBOR BEACH, MI

PROJECT NO. 24-138

	BY	NO.	REVISIONS	DATE
DESIGN	BLK	0	FOR CONSTRUCTION	08.28.26
DRAWN	BLK	---	---	---
CHECKED	ADM	---	---	---
APPROVED	BLK	---	---	---

CIVIL DETAILS

COPYRIGHT © 2025 INTEGRATED DESIGNS INC.

C4.1

FILE LOCATION: F:\24-138 HARBOR BEACH SCHOOL BOND 2025\DRAWINGS\CIVIL\PH.1\
PLOT TIME: 8/29/2026 8:15:42 AM

TMS 602 TABLE 3
MINIMUM VERIFICATION REQUIREMENTS

MINIMUM VERIFICATION	REQUIRED FOR QUALITY ASSURANCE (a)			REFERENCE FOR CRITERIA
	LEVEL 1	LEVEL 2	LEVEL 3	TMS 602
PRIOR TO CONSTRUCTION, VERIFICATION OF COMPLIANCE OF SUBMITTALS	R	R	R	ART 1.5
PRIOR TO CONSTRUCTION, VERIFICATION OF f'_mAND f'_{AAC} EXCEPT WHERE SPECIFICALLTY EXEMPETED BY THIS CODE	NR	R	R	ART 1.4 B
DURING CONSTRUCTION, VERIFICATION OF SLUMP FLOW AND VISUAL STABILITY INDEX (VSI) WHEN SELF-CONSOLIDATING GROUT IS DELIVERED TO PROJECT SITE	NR	R	R	ART 1.5 &1.6.3
DURING CONSTRUCTION, VERIFICATION OF f'_m AND f'_{AAC} FOR EVERY 5,000 SQ. FT.	NR	NR	R	ART 1.4 B
DURING CONSTRUCTION, VERIFICATION OF PROPORTIONS OF MATERIALS AS DELIVERED TO THE PROJECT SITE FOR PREMIXED OR PREBLENDED MORTA, PRESTRESSING GROUT, AND GROUT OTHER THAN SELF-CONSOLIDATING GROUT.	NR	NR	R	ART 1.4 B

(a) R = REQUIRED, NR = NOT REQUIRED

TMS 602 TABLE 4
MINIMUM SPECIAL INSPECTION REQUIREMENTS

INSPECTION TASK	FREQUENCY (a)			REFERENCE FOR CRITERIA	
	LEVEL 1	LEVEL 2	LEVEL 3	TMS 402	TMS 602
1. AS MASONRY CONSTRUCTION BEGINS, VERIFY THAT THE FOLLOWING ARE IN COMPLIANCE:					
a. PROPORTIONS OF SITE-PREPARED MORTAR	NR	P	P		ART 2.1, 2.6A, & 2.6C
b. GRADE AND SIZE OF PRESTRESSING TENDONS AND ANCHORAGES	NR	P	P		ART 2.4B&2.4H
c. GRADE, TYPE AND SIZE OF REINFORCEMENT, CONNECTORS, ANCHOR BOLTS, AND PRESTRESSING TENDONS AND ANCHORAGE	NR	P	P		ART 3.4 & 3.6A
d. PRESTRESSING TECHNIQUE	NR	P	P		ART 3.6 B
e. PROPERTIES OF THIN-BED MORTAR FOR AAC MASONRY	NR	C(b)/P(c)	C		ART 2.1 C.1
f. SAMPLE PANEL CONSTRUCTION	NR	P	C		ART 1.6 D
2. PRIOR TO GROUTING, VERIFY THAT THE FOLLOWING ARE IN COMPLIANCE:					
a. GROUT SPACE	NR	P	C		ART 3.2D&3.2F
b. PLACEMENT OF PRESTRESSING TENDONS AND ANCHORAGES	NR	P	P	SEC. 10.8&10.9	ART 2.4 & 3.6
c. PLACEMENT OF REINFORCEMENT, CONNECTORS, AND ANCHOR BOLTS	NR	P	C	SEC. 6.1, 6.3.1, 6.3.6, & 6.3.7	ART 3.2 E & 3.4
d. PROPORTIONS OF SITE-PREPARED GROUT AND PRESTRESSING GROUT FOR BONDED TENDONS	NR	P	P		ART 2.6 B & 2.4 G.1b
3. VERIFY COMPLIANCE OF THE FOLLOWNG DURING CONSTRUCTION:					
a. MATERIALS AND PROCEDURES WITH THE APPROVED SUBMITTALS	NR	P	P		ART 1.5
b. PLACEMENT OF MASONRY UNITS AND MORTAR JOINT CONSTRUCTION	NR	P	P		ART 3.3 B
c. SIZE AND LOCATION OF STRUCTURAL MEMBERS	NR	P	P		ART 3.3 F
d. TYPE, SIZE, AND LOCATION OF ANCHORS, INCLUDING OTHER DETAILS OF ANCHORAGE OF MASONRY STRUCTURAL MEMBERS, FRAMES, OR OTHER CONSTRUCTION	NR	P	C	SEC. 1.2.1(e), 6.2.1, & 6.3.1	
e. WELDING OF REINFORCEMENT	NR	C	C	SEC. 6.1.6.1.2	
f. PREPARATION, CONSTRUCTION, AND PROTECTION OF MASONRY DURING COLD WEATHER (TEMPERATURE BELOW 40°F(4.4°C)) OR (TEMPERATURE ABOVE 90°F (32.2°C))	NR	P	P		ART 1.8 C & 1.8 D
g. APPLICATION AND MEASUREMENT OF PRESTRESSING FORCE	NR	C	C		ART 3.6 B
h. PLACEMENT OF GROUT AND PRESTRESSING GROUT FOR BONDED TENDONS IS IN COMPLIANCE	NR	C	C		ART 3.6 B
i. PLACEMENT OF AAC MASONRY UNITS AND CONSTRUCTION OF THIN-BED MORTAR JOINTS	NR	C(b)/P(c)	C		ART. 3.3 B.9 & 3.3 F.1.b
4. OBSERVE PREPARATION OF GROUT SPECIMENS, MORTAR SPECIMENS, AND/OR PRISMS	NR	P	C		ART. 1.4 B.2.a.3, 1.4 B.2.b.3, 1.4 B.2.c.3, 1.4 B.3, & 1.4 B.4

(a) FREQUENCY REFERS TO THE FREQUENCY OF INSPECTION, WHICH MAY BE CONTINUOUS DURING THE LISTED TASK OR PERIODICALLY DURING THE LISTED TASK, AS DEFINED IN THE TABLE.
NR = NOT REQUIRED, P = PERIODIC, C = CONTINUOUS
(b) REQUIRED FOR THE FIRST 5000 SQ. FT. OF AAC MASONRY.
(c) REQURIED FOR THE FIRST 5000 SQ. FT. OF AAC MASONRY.

TABLE 1705.3
REQUIRED VERIFICATION AND INSPECTION OF CONCRETE CONSTRUCTION

VERIFICATION AND INSPECTION	CONTINUOUS	PERIODIC	REFERENCED STANDARD	IBC REFERENCED
1. INSPECTION OF REINFORCEMENT, INCLUDING PRESTRESSING TENDONS, AND VERIFY PLACEMENT.	-	X	ACI 318:CH. 20, 25.2, 25.3, 26.6.1-26.6.3	1908.4
2. REINFORCING BAR WELDING: a. VERIFY WELDABILITY OF REINFORCING BARS OTHER THAN ASTM A706 b. INSPECT SINGLE-PASS FILLET WELDS, MAXIMUM $\frac{5}{16}$"; AND c. INSPECT ALL OTHER WELDS	 - - X	 X X -	AWS D1.4 ACI 318: 26.6.4	
3. INSPECT ANCHORS CAST IN CONCRETE	-	X	ACI 318: 26.13.3.3	
4. INSPECT ANCHORS POST-INSTALLED IN HARDENED CONCRETE MEMBERS a. ADHESIVE ANCHORS INSTALLED IN HORIZONTA OR UPWARDLY INCLINED ORIENTATIONS TO RESIST SUSTAINED TENSIONS LOADS. b. MECHANICAL ANCHORS AND ADHESIVE ANCHORS NOT DEFINED IN 4a.	 X -	 - X	 ACI 318: 26.13.3.3 ACI 318: 26.13.3	
5. VERIFY USE OF REQUIRED DESIGN MIX.	-	X	ACI 318: CH. 19, 26.4.3, 26.4.4 1904.1, 1904.2	
6. PRIOR TO CONCRETE PLACEMENT, FABIRCATE SPECIMENS FOR STRENGTH TESTS, PERFORM SLUMP AND AIR CONTENT TESTS, AND DETERMINE THE TEMPERATURE OF THE CONCRETE.	X	-	ASTM C 172, ASTM C 31 ACI 318: 26.5, 26.12	
7. INSPECT CONCRETE AND SHORTCRETE PLACEMENT FOR PROPER APPLICATION TECHNIQUES.	X	-	ACI 318: 26.5	
8. VERIFY MAINTENANCE OF SPECIFIED CURING TEMPERATURE AND THECNIQUES.	-	X	ACI 318: 26.5.3-26.5.5	
9. INSPECT PRESTRESSED CONCRETE FOR: a. APPLICATION OF PRESTRESSING FORCE; AND b. GROUTING OF BONDED PRESTRESSING TENDONS.	 X X	 - -	ACI 318: 26.10	
10. ERECTION OF PRECAST CONCRETE MEMBERS.	-	X	ACI 318: CH 26.9	
11. FOR PRECAST CONCRETE DIAPHRAGM CONNECTIONS OR REINFORCEMENT AT JOINTS CLASSIFIED AS MODERATE OF HIGH DEFORMABILITY ELEMENTS (MDE OR HDE) IN STRUCTURES ASSIGNED TO SEISMIC DESIGN CATEGOR C,D,E, OR F, INSPECT SUCH CONNECTIONS AND REINFORCEMENT IN THE FIELD FOR: a. INSTALLATION OF EMBEDDED PARTS b. COMPLETION OF THE CONTINUITY OF REINFORCEMENT ACROSS JOINTS c. COMPLETION OF CONNECTIONS IN FIELD.	 X X X	 - - -	ACI 318: 26.13.1.3 ACI 550.5	
12. INSPECT INSTALLATION TOLERANCES OF PRECAST CONCRETE DIAPHRAGM CONNECTIONS FOR COMPLIANCE WITH ACI 550.5	-	X	ACI 318: 26.13.1.3	
13. VERIFY IN-SITU CONCRETE STRENGTH PRIOR TO STRESSING OF TENDONS IN POST-TENSIONED CONCRETE AND PRIOR TO REMOVAL OF SHORES AND FORMS FROM BEAMS AND STRUCTURAL SLABS.	-	X	ACI 318: 26.11.2	
14. INSPECT FORMWORK FOR SHAPE, LOCATION AND DIMENSIONS OF THE CONCRETE MEMBER BEING FORMED	-	X	ACI 318: 26.11.1.2(b)	

TABLE 1705.2
REQUIRED VERIFICATION AND INSPECTION OF STEEL CONSTRUCTION

VERIFICATION AND INSPECTION	CONTINUOUS	PERIODIC	REFERENCED STANDARD	IBC REFERENCED
1. MATERIAL VERIFICATION OF STRUCTURAL STEEL	-	X		
2. INSPECTION TASKS FOR STRUCTURAL STEEL WELDING:				
a. PRIOR TO WELDING (OBSERVE, OR PERFORM FOR EACH WELDED JOINT OR MEMBER, THE QA TASKS LISTED IN AISC 360 TABLE N5.4-1)	SEE REFERENCED TABLE	SEE REFERENCED TABLE	AISC 360, SECTION N5.4 TABLE N5.4-1, AISC N5.4	
b. DURING WELDING (OBSERVE, OR PERFORM FOR EACH WELDED JOINT OR MEMBER, THE QA TASKS LISTED IN AISC 360 TABLE N5.4-2)	SEE REFERENCED TABLE	SEE REFERENCED TABLE	AISC 360, SECTION N5.4 TABLE N5.4-2, AISC N5.4	
c. AFTER WELDING (OBSERVE, OR PERFORM FOR EACH WELDED JOINT OR MEMBER, THE QA TASKS LISTED IN AISC 360 TABLE N5.4-3)	SEE REFERENCED TABLE	SEE REFERENCED TABLE	AISC 360, SECTION N5.4 TABLE N5.4-3, AISC N5.4	
d. NONDESTRUCTIVE TESTING (NDT) OF WELDED JOINTS:				
1) COMPLETE PENETRATION GROOVE WELDS $\frac{5}{16}$" OR GREATER IN RISK CATEGORY III OR IV	-	X	AISC 360, SECTION N5.5, AISC N5.5	
2) COMPLETE PENETRATION GROOVE WELDS $\frac{5}{16}$" OR GREATER IN RISK CATEGORY II	-	X		
3) THERMALLY CUT SURFACES OF ACCESS HOLES WHEN MATERIAL t > 2"	-	X		
4) WELDED JOINTS SUBJECTED TO FATIGUE WHEN REQUIRED BY AISC 360, APPENDIX 3, TABLE A-3.1	-	X	AISC 360, APPENDIX 3	
5) MANUFACTURERS NDT REPORTS WHEN PERFORMED	-	X		
2. INSPECTION TASKS FOR STRUCTURAL STEEL BOLTING:				
a. PRIOR TO BOLTING (OBSERVE, OR PERFORM TASKS FOR EACH BOLTED CONNECTION, IN ACCORDANCE WITH QA TASKS LISTED IN AISC 360, TABLE N5.6-1)	SEE REFERENCED TABLE	SEE REFERENCED TABLE	AISC 360, SECTION N5.6 TABLE N5.6-1, AISC N5.6	
b. DURING BOLTING (OBSERVE THE QA TASKS LISTED IN AISC 360, TABLE N5.6-2)	SEE REFERENCED TABLE	SEE REFERENCED TABLE	AISC 360, SECTION N5.6 TABLE N5.6-2, AISC N5.6	
1) PRETENSIONED AND SLIP-CRITICAL JOINTS USING TURN-OF-NUT WITH MATCHMARKING, TWIST-OFF BOLT OR DIRECT TENSION INDICATOR METHODS OF INSTALLATION.	-	X	AISC 360, SECTION M2.5	
2) PRETENSIONED AND SLIP-CRITICAL JOINTS USING TURN-OF-NUT WITHOUT MATCHMARKING OR CALIBRATED WRENCH METHODS OF INSTALLATION.	X	-		
3) SNUG TIGHT JOINTS.	-	X		
c. AFTER BOLTING (PERFORM TASKS FOR EACH BOLTED CONNECTION IN ACCORDANCE WITH QA TASKS LISTED IN AISC 360, TABLE N5.6-3)	SEE REFERENCED TABLE	SEE REFERENCED TABLE	AISC 360, SECTION N5.6 TABLE N5.6-3, AISC N5.6	
3. REINFORCING STEEL:				
a. VERIFICATION OF WELDABILITY OF REINFORCING STEEL OTHER THAN ASTM A 706.	-	X		
2) REINFORCING STEEL RESISTING FLEXURAL AND AXIAL FORCES IN INTERMEDIATE AND SPECIAL MOMENT FRAMES, AND BOUNDARY ELEMENTS OF SPECIAL STRUCTURAL WALLS OF CONCRETE AND SHEAR REINFORCEMENT.	X	-		
3) SHEAR REINFORCEMENT.	X	-		
4) OTHER REINFORCING STEEL.	-	X		
4. INSPECTION OF STEEL FRAME JOINT DETAILS FOR COMPLIANCE:				
a. DETAILS SUCH AS BRACING AND STIFFENING.	-	X		
b. MEMBER LOCATIONS.	X	-		
c. APPLICATION OF JOINT DETAILS AT EACH CONNECTION.	-	X		
5. MATERIAL VERIFICATION OF COLD-FORMED STEEL DECK:				
a. IDENTIFICATION MARKINGS	-	X		
b. MANUFACTURERS CERTIFIED TEST REPORTS	-	X		
6. CONNECTION OF COLD-FORMED DECK TO SUPPORTING STRUCTURE:				
a. WELDING	-	X		
b. OTHER FASTENERS				
1) VERIFY FASTENERS ARE IN CONFORMANCE WITH APPROVED SUBMITTAL	-	X	AISC 360, SECTION N6	
2) VERIFY FASTENER INSALLATION IS IN CONFORMANCE WITH APPROVED SUBMITTAL AND MANUFACTURER'S RECOMMENDATIONS	-	X		

TABLE 1705.2.3
REQUIRED VERIFICATION AND INSPECTION OF OPEN-WEB STEEL JOISTS AND JOIST GIRDERS

VERIFICATION AND INSPECTION	CONTINUOUS	PERIODIC	REFERENCED STANDARD	IBC REFERENCED
1. INSTALLATION OF OPEN-WEB STEEL JOISTS AND JOIST GIRDERS.				
a. END CONNECTIONS - WELDING OR BOLTED	-	X	SJI SPECIFICATIONS: 2207.1	2207.5
b. BRIDGING - HORIZONTAL OR DIAGONAL	-	-		
1. STANDARD BRIDGING.	-	X	SJI SPECIFICATIONS: 2207.1	2207.5
2. BRIDGING THAT DIFFERS FROM THE SJI SPECIFACATIONS LISTED IN SECTION 2207.1.		X		

TABLE 1705.6
REQUIRED VERIFICATION AND INSPECTION OF SOILS

VERIFICATION AND INSPECTION TASK	CONTINUOUS DURING TASK LISTED	PERIODICALLY DURING TASK LISTED
1. VERIFY MATERIALS BELOW SHALLOW FOUNDATIONS ARE ADEQUATE TO ACHIEVE THE DESIGN BEARING CAPACITY.	-	X
2. VERIFY EXCAVATIONS ARE EXTENDED TO PROPER DEPTH AND HAVE REACHED PROPER MATERIAL.	-	X
3. PERFORM CLASSIFICATION AND TESTING OF COMPACTED FILL MATERIALS.	-	X
4. VERIFY USE OF PROPER MATERIALS, DENSITIES AND LIFT THICKNESSES DURING PLACEMENT AND COMPACTION OF COMPACTED FILL.	X	-
5. PRIOR TO PLACEMENT OF COMPACTED FILL, OBSERVE SUBGRADE AND VERIFY THAT SITE HAS BEEN PREPARED PROPERLY.	-	X

MARQUETTE OFFICE:
1021 W. BARAGA AVENUE
MARQUETTE, MI 49855
PHONE: (906)228-4400
FAX: (906)228-7524

BRIGHTON OFFICE:
10525 CLARK CROSSING AVE., SUITE 600
BRIGHTON, MI 48116
PHONE: (810)225-2701
FAX: (810)225-8787

INTEGRATED DESIGNS INC.
ARCHITECTURE ENGINEERING CONSULTING

HARBOR BEACH COMMUNITY SCHOOLS
PHASE 1 - 2026 ADDITION & RENOVATIONS
HARBOR BEACH, MICHIGAN
PROJECT NO. 24-138

	BY	DATE	NO.	REVISIONS	DATE
DESIGN	PDN	03.13.26	0	FOR CONSTRUCTION	08.28.26
DRAWN	PDN	03.13.26	---	---	---
CHECKED	PDN	08.26.26	---	---	---
APPROVED	PDN	08.26.26	---	---	---

QUALITY CONTROL TABLES

COPYRIGHT © 2017 INTEGRATED DESIGNS INC.

S0.0

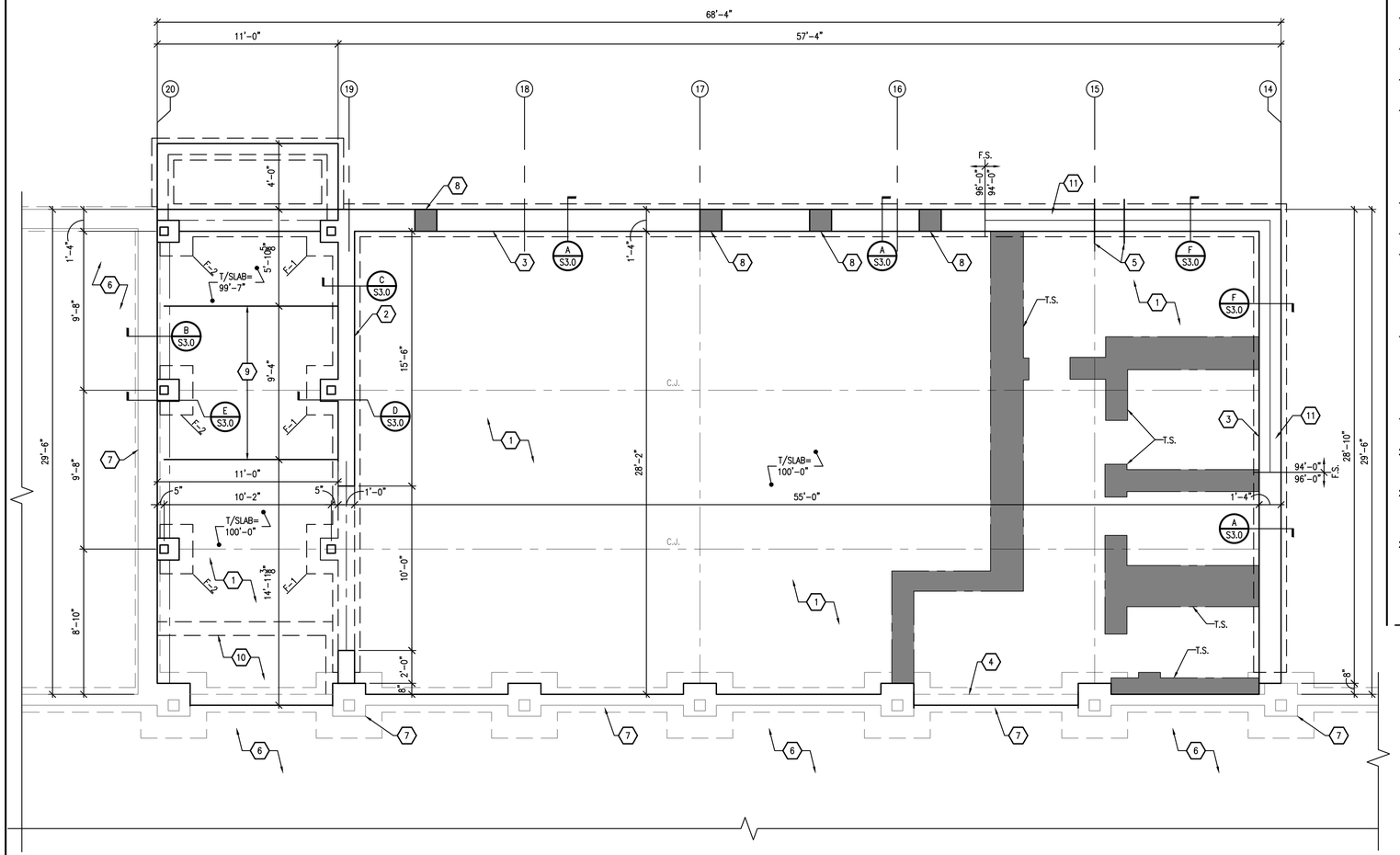

ADDITION FOUNDATION PLAN

SCALE: 1/8" = 1'-0"

T/ SLAB = 100'-0", U.N.O. = 626.40' CIVIL
T/ FTG = 96'-0", U.N.O.
B/ EXIST. FTG = 95'-0", U.N.O.

N

MASONRY NOTES

1. THE CONTRACTOR SHALL RETAIN THE SERVICES OF A QUALIFIED, INDEPENDENT, INSPECTION FIRM TO PERFORM ON-SITE INSPECTIONS OF MASONRY AS REQUIRED BY 2021 MICHIGAN BUILDING CODE.
2. ALL CONCRETE MASONRY SHALL CONFORM TO ASTM C90, HOLLOW LOADBEARING BLOCK UNITS. LAY BLOCK IN RUNNING BOND.
3. ALL MORTAR FOR CONCRETE MASONRY SHALL CONFORM TO ASTM C270, TYPE S. JOINTS SHALL BE TOOLED CONCAVE.
4. ALL GROUT SHALL CONFORM TO ASTM C476. MORTAR SHALL NOT BE SUBSTITUTED FOR GROUT. CORES CONTAINING REBAR SHALL BE GROUTED SOLID.
5. REBAR LAPS SHALL HAVE THE FOLLOWING LAP LENGTHS:

BAR SIZE	8" CMU	12" CMU
#3	16"	16"
#4	21"	21"
#5	26"	26"
#6	43"	40"
#7	60"	46"
#8	92"	61"

6. REBAR SHOP DRAWINGS SHALL BE SUBMITTED TO THE ARCHITECT/ENGINEER FOR APPROVAL PRIOR TO FABRICATION.
7. HORIZONTAL JOINT REINFORCEMENT SHALL BE LADDER TYPE, GALVANIZED FINISH, COLD DRAWN STEEL WITH 9 GAUGE SIDE RODS AND CROSS TIES. INSTALL JOINT REINFORCEMENT AT 16" O.C., VERTICALLY.
8. SEE LINTEL SCHEDULE FOR STEEL LINTELS. PROVIDE BOND BEAM MASONRY LINTELS OVER ALL WALL OPENINGS NOT SCHEDULED FOR STEEL LINTELS. BOND BEAM LINTELS SHALL BE 8" HIGH WITH TWO #5 BOTTOM BARS, U.N.O.
9. IN SINGLE WYTHE AND MULTI-WYTHE SOLID WALLS, STEEL LINTELS SHALL BE CENTERED ON THE WALL. IN MULTI-WYTHE CAVITY WALLS, STEEL LINTELS SHALL BE CENTERED ON THE CONCRETE MASONRY WYTHE AND THE BOTTOM PLATE FOR VENEER SUPPORT SHALL BE OFFSET AS REQUIRED.
10. STEEL BOTTOM PLATES SHALL BE WELDED TO BEAM SECTIONS TO CARRY MASONRY. PLATE WIDTH SHALL BE THE NOMINAL WALL THICKNESS MINUS 1". PLATE THICKNESS SHALL BE 1/4" FOR PLATES 12" AND LESS WIDE, AND 5/16" FOR PLATES WIDER THAN 12".
11. ALL LINTELS SHALL BEAR 8" EACH END, UNLESS A BEARING PLATE IS CALLED FOR ON THE PLANS. FIELD WELD LINTELS TO BEARING PLATES.
12. GROUT MASONRY CORES DIRECTLY BELOW JOIST, BEAM AND LINTEL BEARINGS IN NEW AND EXISTING MASONRY A MINIMUM OF ONE COURSE, U.N.O.
13. PROVIDE TWO #5 BARS ON ALL SIDES OF OPENINGS IN BLOCK WALLS. EXTEND BARS 2'-0" BEYOND EDGE OF OPENING IN ALL DIRECTIONS.
14. PROVIDE VERTICAL CONTROL JOINTS AT THE FOLLOWING LOCATIONS:
    - AS SHOWN ON THE PLANS
    - INTERSECTIONS OF PERPENDICULAR WALLS
    - CHANGES IN WALL HEIGHT
    - CHANGES IN WALL THICKNESS
    - TRANSITION BETWEEN SLAB & FOOTING SUPPORTED WALLS
    - SPACED NO MORE THAN 40 FEET OR TWICE THE WALL HEIGHT APART, WHICHEVER IS LESS
15. DO NOT PLACE VERTICAL CONTROL JOINTS THROUGH BOND BEAM MASONRY LINTELS, OR WITHIN 16" OF A BEAM OR JOIST BEARING POINT.
16. ANCHOR BOLTS SHALL CONFORM TO ASTM A307.
17. DRILLED IN CONCRETE ANCHORS(DCA'S) FOR GROUTED MASONRY SHALL BE AS FOLLOWS:
    - A. HILTI HEAVY DUTY "KWIK BOLTS"
    - B. RAMSET/REDHEAD "DYNABOLT SLEEVE"
    - C. POWERS/RAWL "POWERBOLT"
    - D. SIMPSON STRONG-TIE "WEDGE-ALL"
    - E. APPROVED EQUAL
18. DRILLED IN CONCRETE ANCHORS(DCA'S) FOR HOLLOW MASONRY SHALL BE AS FOLLOWS:
    - A. HILTI "SLEEVE ANCHORS"
    - B. RAMSET/REDHEAD "DYNABOLT SLEEVE"
    - C. POWERS/RAWL "LOK/BOLT"
    - D. SIMPSON STRONG-TIE "SLEEVE-ALL"
    - E. APPROVED EQUAL
19. NO FILL SHALL BE PLACED AGAINST CONCRETE MASONRY WALLS UNTIL MORTAR HAS REACHED 75% OF DESIGN STRENGTH OR UNTIL DIRECTED BY THE ARCHITECT.
20. ALL INTERSECTING MASONRY WALLS(LOAD AND NONLOADBEARING) SHALL BE ANCHORED OR BONDED TOGETHER BY ONE OF THE METHODS DESCRIBED IN THE 2021 MICHIGAN BUILDING CODE AND TMS 402, 602 & 604., U.N.O.
21. INTERIOR NONLOADBEARING MASONRY WALLS, WITH AN UNSUPPORTED LENGTH BETWEEN INTERSECTING PERPENDICULAR WALLS GREATER THAN 36 TIMES THE WALL THICKNESS, SHALL BE BRACED TO THE FLOOR OR ROOF STRUCTURE ABOVE AT INTERVALS NOT EXCEEDING 36 TIMES THE WALL THICKNESS, U.N.O.
22. ALL COLD WEATHER MASONRY WORK SHALL BE DONE IN ACCORDANCE WITH "IMIAWC: RECOMMENDED PRACTICES AND GUIDE SPECIFICATION FOR COLD WEATHER MASONRY CONSTRUCTION". THE "IMIAWC" PROVISIONS SHALL BE CONSIDERED TO BE MANDATORY.

⬡ KEYNOTES ⬡

1. 4" CONCRETE SLAB WITH WWF, 6x6-W1.4xW1.4 IN TOP 1/3 OF SLAB OVER 10 MIL VAPOR BARRIER ON COMPACTED CLASS II FILL.
2. 12" REINF. CONCRETE FOUNDATION WALL WITH 12"x24" CONT. STRIP FOOTING, RE: DETAILS.
3. 16" REINF. CONCRETE FOUNDATION WALL WITH 12"x24" CONT. STRIP FOOTING, RE: DETAILS.
4. STEP NEW/EXIST. FOUNDATION WALL 8" AT DOOR THRESHOLD – DEMO 8" OF EXIST. FOUNDATION WALL AS REQ'D TO ALIGN W/ NEW THRESHOLD, COORD. W/ ARCH. DWGS.
5. SLEEVE @ THRU WALL PENETRATION, COORD. W/ CIVIL DWGS.
6. EXIST. CONCRETE SLAB.
7. EXIST. CONCRETE FOUNDATION SYSTEM.
8. REINF. MASONRY PIER @ OPENINGS-COORD. VERTICAL BAR LAP W/ CMU WALL ABOVE, RE: DTL 8/S4.0.
9. RAMP SLAB 5", COORD. W/ ARCH. DWGS.
10. DEMO EXIST. CONCRETE FROST STOOP.
11. BRICK VENEER LEDGE @ FOOTING STEP, RE: DTL F/S3.0.

SITE PREPARATION NOTES

1. REFER TO THE GEOTECHNICAL REPORT BY SME IN THE SPECIFICATION SECTION –GEOTECHNICAL REPORT. THOSE PORTIONS OF THE GEOTECHNICAL REPORT INDICATED IN THESE "SITE PREPARATION NOTES" SHALL BE CONSIDERED REQUIRED WORK FOR THE PROJECT.
2. WITHIN THE BUILDING FOOTPRINT AND 5 FEET BEYOND, REMOVE ALL MATERIAL IDENTIFIED AS SOFT CLAY BY THE GEOTECHNICAL REPORT.
3. FOOTINGS ARE DESIGNED TO BEAR ON ENGINEERED FILL WITH A NET ALLOWABLE BEARING CAPACITY OF 4,000 PSF AS BASED ON THE GEOTECHNICAL REPORT. IF MATERIAL OF THIS CAPACITY IS NOT FOUND AT THE ELEVATIONS INDICATED, FOOTINGS SHALL BE LOWERED OR ENLARGED AT THE DIRECTION OF THE ARCHITECT.
4. TO ACHIEVE PROPER GRADE FOR THE BUILDING, STRUCTURAL FILL SHALL BE PROVIDED AS DESCRIBED IN THE GEOTECHNICAL REPORT.
5. THE FINAL 8" OF SOIL DIRECTLY BELOW FLOOR SLABS SHALL BE WELL GRADED MATERIAL (CLASS II AS DEFINED BY MDOT SPECIFICATIONS) COMPACTED TO 95% OF MODIFIED PROCTOR AS DESCRIBED IN THE GEOTECHNICAL REPORT.
6. DO NOT UNDERMINE THE EXISTING FOUNDATIONS WHEN EXCAVATING ADJACENT TO THE EXISTING BUILDING. SHOULD IT BECOME NECESSARY TO EXCAVATE TO AN ELEVATION BELOW THE EXISTING FOOTINGS, THE EXCAVATION CONTRACTOR SHALL BE RESPONSIBLE FOR PROVIDING & DESIGNING TEMPORARY SHORING OF EXISTING FOOTINGS, OR OTHER MEANS OF SAFEGUARDING THE EXISTING FOUNDATIONS.
7. THE GEOTECHNICAL REPORT CONSTITUTES ALL INFORMATION AVAILABLE REGARDING SUBSURFACE CONDITIONS. THE CONTRACTOR SHALL READ AND BECOME FAMILIAR WITH THE GEOTECHNICAL REPORT, WITH PARTICULAR REGARD FOR THE IMPACT OF SUBSURFACE CONDITIONS ON THE CONSTRUCTION PROCESS. ANY MEASURES NECESSARY TO FACILITATE THE CONSTRUCTION PROCESS ITSELF, INCLUDING, BUT NOT LIMITED TO, TEMPORARY SHORING OF EXCAVATIONS AND TEMPORARY DEWATERING, SHALL BE THE CONTRACTOR'S RESPONSIBILITY AND SHALL BE INCLUDED IN THE BID PRICE.

LEGEND

F.S.	FOOTING STEP
T/	"TOP OF"
EXIST.	EXISTING
F-x	FOOTING MARK
T.S.	THICKENED SLAB
TYP.	TYPICAL
C.J.	CONTROL/CONSTRUCTION JOINT
SIM.	SIMILAR
T/S	TOP OF STEEL
F.V.	FIELD VERIFY
N.T.S.	NOT TO SCALE
U.N.O.	UNLESS NOTED OTHERWISE

INTEGRATED DESIGNS INC.
ARCHITECTURE ENGINEERING CONSULTING

MARQUETTE OFFICE:
1021 W. BARAGA AVENUE
MARQUETTE, MI 49855
PHONE: (906)228-4400
FAX: (906)228-7524

BRIGHTON OFFICE:
9525 CLARK CENTER AVE, SUITE 600
BRIGHTON, MI 48116
PHONE: (810)225-2701
FAX: (810)225-8787

HARBOR BEACH COMMUNITY SCHOOLS
PHASE 1 - 2026 ADDITION & RENOVATIONS
HARBOR BEACH, MICHIGAN
PROJECT NO. 24-138

NO.	REVISIONS	DATE
A	DESIGN DEVELOP.	06.03.26
B	95% OWNER REVIEW	08.03.26
0	FOR CONSTRUCTION	08.28.26
---	---	---
---	---	---

	BY	DATE
DESIGN	PDN	03.13.26
DRAWN	PDN	03.13.26
CHECKED	PDN	08.28.26
APPROVED	PDN	08.26.26

ADDITION
FOUNDATION PLAN

COPYRIGHT © 2017 INTEGRATED DESIGNS INC.

S1.0

LINTEL SCHEDULE

MARK	SECTION	BEARING	REMARKS
L-1 ML-1	W8x18 + 1/4"x11" BOTTOM PLATE	8" EACH END	PROVIDE $\frac{1}{4}$" TRIANGULAR STIFFENER PLATES AT 2'-0" O.C. FROM WEB TO BOTTOM PLATE.
L-2 ML-2	W8x10 + 1/4"x7" BOTTOM PLATE	8" EACH END	(2)L3$\frac{1}{2}$"x3$\frac{1}{2}$"x$\frac{1}{4}$" PERMITTED AT SINGLE DOOR OPENINGS AT NON LOAD BEARING WALLS AND FOR MECHANICAL LINTELS.
L-3	W8x13 + 1/4"x15" BOTTOM PLATE	8" EACH END	PROVIDE $\frac{1}{4}$" TRIANGULAR STIFFENER PLATES AT 2'-0" O.C. FROM WEB TO BOTTOM PLATE.
L-4	W16x26 + 1/4"x15" BOTTOM PLATE	8" EACH END	PROVIDE $\frac{1}{4}$" TRIANGULAR STIFFENER PLATES AT 2'-0" O.C. FROM WEB TO BOTTOM PLATE.
L-5	W8x13 + 1/4"x14" BOTTOM PLATE	8" EACH END	PROVIDE $\frac{1}{4}$" TRIANGULAR STIFFENER PLATES AT 2'-0" O.C. FROM WEB TO BOTTOM PLATE.
ML-6	W8x10 + 1/4"x14" BOTTOM PLATE	8" EACH END	MECHANICAL LINTEL LOCATED AT INSTALLATION OF (3) NEW UNIT VENTILATORS – COORD. W/ MECH. DWGS.

COLUMN SCHEDULE

MARK	SECTION	BASE PLATE	ANCHOR BOLTS	B/BASE PL EL.	REMARKS
C-1	HSS6x6x1/4"	3/4"x12"x12"	(4) AB-1	98'-9"	–
C-2	HSS6x6x1/4"	3/4"x12"x12"	(4) AB-1	98'-9"	BASE PLATE OFFSET TO ACCOMMODATE EXIST. CMU WALL / FND. SYSTEM

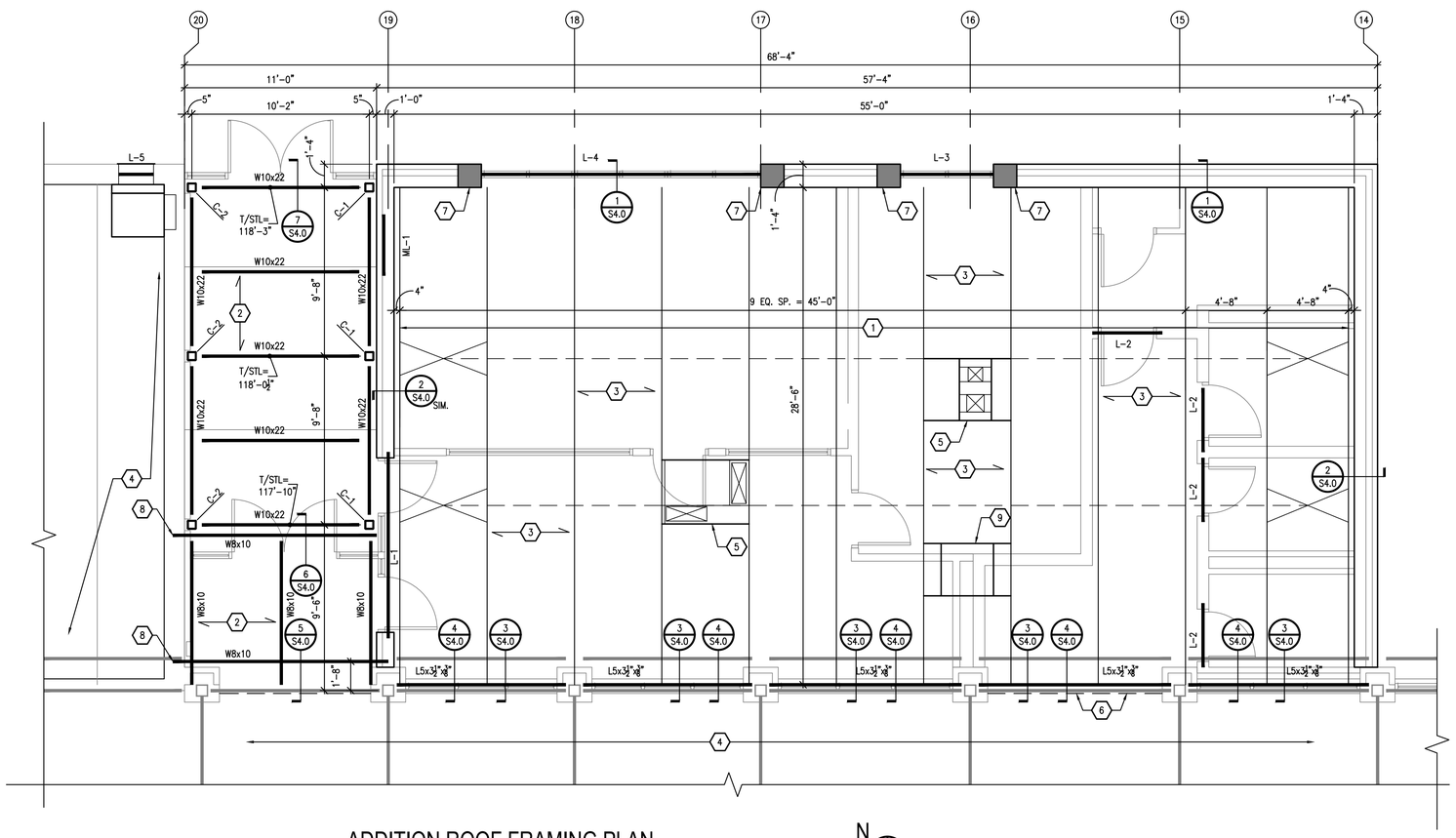

ADDITION ROOF FRAMING PLAN

SCALE: 1/8" = 1'-0"

- EAST JOIST BEARING = 111'-4¾"
- WEST JOIST BEARING = 112'-0"

N

CONCRETE NOTES

1. ALL REINFORCING STEEL SHALL CONFORM TO ASTM A615, GRADE 60. ALL WELDED WIRE FABRIC SHALL CONFORM TO ASTM A185 WITH MINIMUM LAPS OF 8".
2. PROVIDE CORNER BARS TO MATCH ALL HORIZONTAL REINFORCING IN WALLS AND FOOTINGS. ALL LAPS SHALL BE A MINIMUM OF 30 BAR DIAMETERS, U.N.O.
3. PROVIDE DOWELS BETWEEN ALL FOOTINGS, WALLS, AND PIERS TO MATCH SIZE AND SPACING OF VERTICAL REINFORCING. ALL LAPS SHALL BE A MINIMUM OF 30 BAR DIAMETERS, U.N.O.
4. ALL "CAST-IN" ANCHOR BOLTS SHALL BE ASTM A307.
5. ALL CONCRETE SHALL ATTAIN THE FOLLOWING 28 DAY COMPRESSIVE STRENGTHS:
   FOOTINGS, PIERS.....3000 PSI
   SLABS ON GRADE.....4000 PSI
6. PROVIDE AIR ENTRANING FOR ALL CONCRETE EXCEPT INTERIOR SLABS AND INTERIOR FOOTINGS.
7. CONCRETE SHALL CONFORM TO THE FOLLOWING:
   ACI 301: SPECIFICATIONS FOR STRUCTURAL CONCRETE
   ACI 305: HOT WEATHER CONCRETING
   ACI 306: COLD WEATHER CONCRETING
8. NO FILL SHALL BE PLACED AGAINST CONCRETE WALLS UNTIL CONCRETE HAS REACHED 75% OF DESIGN STRENGTH OR UNTIL DIRECTED BY THE ARCHITECT.
9. DRILLED IN CONCRETE ANCHORS(DCA'S) SHALL BE AS FOLLOWS:
   A. HILTI HEAVY DUTY "KWIK BOLTS"
   B. RAMSET/REDHEAD "DYNABOLT SLEEVE"
   C. POWERS/RAWL "POWERBOLT"
   D. SIMPSON STRONG-TIE "WEDGE-ALL"
   E APPROVED EQUAL
10. ELECTRICAL CONDUITS, PIPES, DRAINS, ETC. SHALL BE IN PLACE BEFORE CONCRETE IS PLACED.
11. REBAR SHOP DRAWINGS SHALL BE SUBMITTED TO THE ARCHITECT FOR APPROVAL PRIOR TO FABRICATION. ALL SHOP DRAWINGS SHALL BE PREPARED IN ACCORDANCE WITH THE LATEST EDITION OF THE ACI DETAILING MANUAL.

STEEL NOTES

1. EXISTING STRUCTURAL INFORMATION, LOCATIONS AND ELEVATIONS ARE BASED ON RECORD DRAWINGS AND/OR FIELD OBSERVATIONS. THE CONTRACTOR SHALL FIELD VERIFY THIS INFORMATION PRIOR TO BEGINNING CONSTRUCTION.
2. STEEL MEMBER DESIGN IS BASED UPON THE LOAD & RESISTANCE FACTOR DESIGN METHOD OF THE AISC 360 MANUAL OF STEEL CONSTRUCTION.
3. STRUCTURAL STEEL WIDE FLANGE('W') SHAPES–ASTM A992(50 KSI STEEL)
   ALL OTHER STRUCTURAL STEEL PLATES & RODS–ASTM A36
   STEEL PIPE WITH WALL THICKNESS GREATER THAN 5/8' ASTM A53, GRADE B
   ALL OTHER ROUND, SQUARE & RECTANGULAR HOLLOW STRUCTURAL SECTIONS–ASTM A500 GRADE B
4. BEAM CONNECTIONS SHALL BE DESIGNED TO SUPPORT HALF THE MAXIMUM TOTAL UNIFORM LOAD, FOR THE SPAN OF THE BEAM SHOWN ON THE PLANS. MAXIMUM TOTAL UNIFORM LOADS ARE PROVIDED IN TABLE 3-6 OF THE AISC MANUAL OF STEEL CONSTRUCTION.
5. ALL STEEL TO STEEL CONNECTIONS SHALL BE MADE WITH 3/4" DIAMETER ASTM A325-N HEAVY HEX HEAD, TYPE 1, HIGH STRENGTH BOLTS OR E70XX ELECTRODES, U.N.O. ALL WELDING SHALL BE IN ACCORDANCE WITH LATEST AWS SPECIFICATIONS. MINIMUM WELD SIZE SHALL BE 3/16", U.N.O.
6. ALL BOLTS SHALL BE TIGHTENED TO "SNUG TIGHT"(PER 8.1 OF AISC SPECIFICATION FOR STRUCTURAL JOINTS USING ASTM A325 OR A490 BOLTS), U.N.O. BOLTS DESIGNATED ON THE PLANS TO BE "FULLY TENSIONED" SHALL BE TIGHTENED TO THE REQUIRED LOAD BY THE "TURN OF THE NUT" METHOD.
7. ALL FIELD CONNECTIONS SHALL BE BOLTED, U.N.O.
8. MEMBER CONNECTIONS SHALL BE DETAILED FOR A MINIMUM FORCE OF NO LESS THAN 10 KIPS.
9. ALL JOISTS AND JOIST GIRDERS SHALL CONFORM TO SJI STANDARDS. EXTEND BOTTOM CHORDS TO CONNECT AT ALL COLUMNS. PROVIDE BRIDGING PER SJI STANDARDS. JOIST CAMBER FOR FLOOR JOISTS SHALL BE PER SJI SPECIFICATIONS. ROOF JOISTS SHALL BE CAMBERED NO MORE THAN REQUIRED TO OFFSET DEFELECTION DUE TO THE JOIST'S OWN WEIGHT.
10. METAL ROOF DECK SHALL BE ASTM A611, GRADES C, D OR E, AS APPLICABLE, FOR UNCOATED OR PAINTED DECK. FOR GALVANIZED ROOF DECK, CONFORM TO ASTM A653 STRUCTURAL QUALITY GRADE 33 OR HIGHER; WITH G60 GALVANIZED COATING CONFORMING TO ASTM A525. ALL ROOF DECK SHALL CONFORM TO SDI STANDARDS, AND BE PAINTED, EXCEPT WHERE SPRAYED ON FIREPROOFING IS TO BE APPLIED, WHERE DECK SHALL BE UNCOATED.
11. OPENINGS THROUGH ROOF DECK MAY OR MAY NOT BE SHOWN ON FRAMING PLANS. GENERAL CONTRACTOR SHALL COORDINATE WITH ALL TRADES AND PROVIDE FOR OPENINGS AND FRAMES/REINFORCING AS FOLLOWS:
    A. OPENINGS UP TO 18"x18"–PROVIDE L2x2x3/16 ANGLES PERPENDICULAR TO DECK FLUTES, ON BOTH SIDES OF OPENING. EXTEND ANGLES A MINIMUM OF 2 FLUTES BEYOND EDGE OF OPENING. FASTEN ANGLES TO EACH FLUTE WITH #10 TEK SCREWS.
    B. OPENINGS LARGER THAN 18"x18"–PROVIDE A WELDED L4x4x1/4 FRAME SUPPORTED BY STEEL JOISTS OR BEAMS AS SHOWN IN 'TYPICAL JOIST REINFORCING DETAIL'. REINFORCE STEEL JOISTS PER THE SAME DETAIL.
12. PROVIDE CONTINUOUS 12 GAUGE, 12"(MINIMUM) WIDE COVER PLATE WHERE ROOF DECK CHANGES DIRECTION. FASTEN TO DECK ON BOTH SIDES OF JOINT WITH #10 TEK SCREWS AT 12" O.C.
13. METAL FORM DECK SHALL BE ASTM A653 STRUCTURAL QUALITY GRADE 33 OR HIGHER; WITH G60 GALVANIZED COATING CONFORMING TO ASTM A525 OR PAINTED FINISH, AS INDICATED ON PLANS.
14. UNLESS NOTED OTHERWISE, METAL DECK SHALL BE FASTENED TO SUPPORT MEMBERS AT 18" O.C. PROVIDE TWO SIDELAP FASTENERS EVENLY SPACED BETWEEN SUPPORT MEMBERS. SUPPORT MEMBER FASTENERS SHALL BE #12 TEK SCREWS. SIDELAP FASTENERS SHALL BE #10 TEK SCREWS. METAL DECK SHALL NOT BE WELDED.
15. STEEL PAINTING–PROVIDE GREY OXIDE SHOP COAT.
16. SHOP DRAWINGS SHALL BE SUBMITTED TO THE ARCHITECT FOR APPROVAL PRIOR TO FABRICATION. FABRICATOR SHALL PRODUCE ERECTION DRAWINGS WITHOUT PHOTOCOPYING OR OTHERWISE REPRODUCING THE ARCHITECT'S DESIGN PLANS.

⬡ KEYNOTES ⬡

1. 24K6 STEEL JOISTS WITH 2 ROWS WELDED HORIZONTAL BRIDGING.
2. 1-1/2", 20 GAGE, WIDE RIB, PAINTED STEEL ACOUSTICAL ROOF DECK W/ GLASS FIBER ABSORBING BATTS, MINIMUM 3 SPANS CONTINUOUS. FASTEN TO SUPPORT MEMBERS IN A 36/5 PATTERN WITH #12 TEK SCREWS. PROVIDE 4 EVENLY SPACED #10 TEK SCREW SIDELAP FASTENERS.
3. 1-1/2", 20 GAGE, WIDE RIB, PAINTED STEEL ROOF DECK, MINIMUM 3 SPANS CONTINUOUS. FASTEN TO SUPPORT MEMBERS IN A 36/5 PATTERN WITH #12 TEK SCREWS. PROVIDE 4 EVENLY SPACED #10 TEK SCREW SIDELAP FASTENERS.
4. EXISTING ROOF STRUCTURE.
5. ANGLE FRAME AT ROOF DECK OPENING PER "STEEL NOTES" #11, COORD. W/ ARCH. & MECH. DWGS.
6. DEMO EXIST. MASONRY WALL SYSTEM @ NEW CORRIDOR OPENING, COORD. W/ ARCH. DWGS.
7. (2)#5 VERT. BAR @ WINDOW JAMB & ADJACENT MASONRY CELL, RE: DTL 8/S4.0.
8. POCKET BEAM @ EXIST. CMU WALL, GROUT SOLID 16".
9. DECK SUPPORT ANGLE FRAME @ ELECTRICAL TRANSFORMER. PROVIDE 2x12 TREATED BOX CURB FASTENED TO TOP OF DECK FOR SUPPORT OF TRANSFORMER. COORD. EXACT SIZE & LOCATION W/ ELECTRICAL DWGS. COORD. W/ ROOFING CONTRACTOR TO ENSURE CURB IS WEATHERTIGHT. CONDITION ALSO ABOVE ELECTRICAL ROOM ADJACENT TO HOME EC. RENOVATIONS, RE: METAL FAB SPECIFICATIONS.

STRUCTURAL LOADS

1. DESIGN LOADS–IN ACCORDANCE WITH THE 2021 MICHIGAN BUILDING CODE & SEI/ASCE 7.
2. SNOW LOAD INFORMATION
   A. Pg=35 PSF
   B. Is=1.1(CATEGORY III)
   C. Ce=1.0(EXPOSURE B)
   D. Ct=1.0
   E. Pf=27 PSF=(35 PSF)(0.7)(1.1)(1.0)(1.0)

   ROOF DEAD LOAD=20 PSF
   ROOF SNOW LOAD=27 PSF
   DRIFT LOADING DUE TO HIGH/LOW ROOF CONDITIONS HAVE BEEN TAKEN INTO ACCOUNT FOR THE STRUCTURAL DESIGN
3. WIND LOAD INFORMATION
   A. Vult=120 MPH Vasd=93 MPH
   B. Iw=1.15(CATEGORY III)
   C. EXPOSURE B
   D. GCpi=+0.18 & -0.18
   E. COMPONENTS & CLADDING DESIGN WIND PRESSURE=20 PSF
   F. 20 PSF MIN. UPLIFT LOADING.
4. SEISMIC LOAD INFORMATION
   A. SEISMIC USE GROUP III(Ie=1.25)
   B. SPECTRAL RESPONSE ACCELERATIONS
   1. Ss=0.063g
   2. S1=0.038g
   C. SITE CLASS D
   D. SPECTRAL RESPONSE COEFFICIENTS
   1. Sds=0.067g
   2. Sd1=0.060g
   E. SEISMIC DESIGN CATEGORY A
   F. BASIC SEISMIC FORCE RESISTING SYSTEM=ORDINARY PLAIN MASONRY SHEARWALLS
   G. DESIGN BASE SHEAR=22,400 lbs.
   H. SEISMIC RESPONSE COEFFICIENT Cs=0.035
   I. RESPONSE MODIFICATION FACTOR R=2.5
   J. ANALYSIS PROCEDURE USED–EQUIVALENT LATERAL FORCE PROCEDURE.

LEGEND

T/	"TOP OF"
EXIST.	EXISTING
F-x	FOOTING MARK
TYP.	TYPICAL
STEEL JOIST	
BEAM/LINTEL	
L-x	LINTEL MARK
HORIZONTAL BRIDGING	
CROSS BRIDGING	
J.B.	JOIST BEARING ELEVATION
O.H.	OPPOSITE HAND
SIM.	SIMILAR
T/S	TOP OF STEEL
F.V.	FIELD VERIFY
N.T.S.	NOT TO SCALE
U.N.O.	UNLESS NOTED OTHERWISE

MARQUETTE OFFICE:
1021 W. BARAGA AVENUE
MARQUETTE, MI 49855
PHONE: (906)228-4400
FAX: (906)228-7524

BRIGHTON OFFICE:
10525 CLARK CENTER AVE, SUITE 600
BRIGHTON, MI 48116
PHONE: (810)229-2701
FAX: (810)229-8787

ARCHITECTURE ENGINEERING CONSULTING
INTEGRATED DESIGNS INC.

HARBOR BEACH COMMUNITY SCHOOLS
PHASE 1 - 2026 ADDITION & RENOVATIONS
HARBOR BEACH, MICHIGAN
PROJECT NO. 24-138

NO.	REVISIONS	DATE
A	DESIGN DEVELOP.	06.03.26
B	95% OWNER REVIEW	08.03.26
0	FOR CONSTRUCTION	08.28.26
---	---	---
---	---	---

	BY	DATE
DESIGN	PDN	03.13.26
DRAWN	PDN	03.13.26
CHECKED	PDN	08.26.26
APPROVED	PDN	08.26.26

ADDITION
ROOF FRAMING PLAN

COPYRIGHT © 2017 INTEGRATED DESIGNS INC.

S2.0

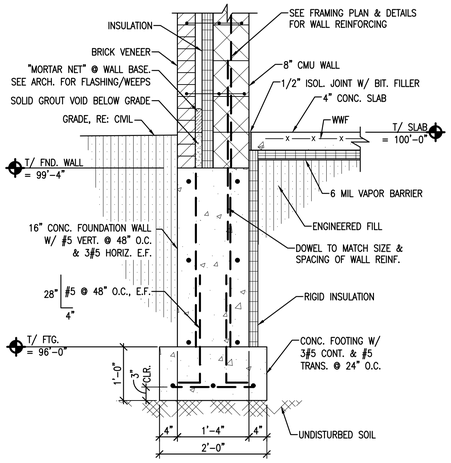

DETAIL A
SCALE: 3/4" = 1'-0"
S1.0

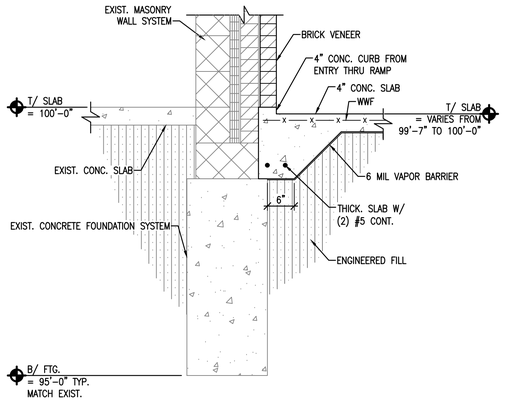

DETAIL B
SCALE: 3/4" = 1'-0"
S1.0

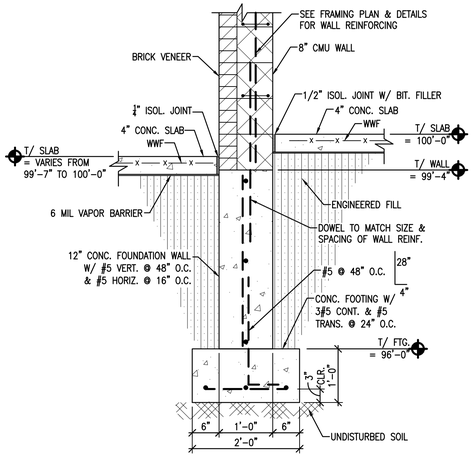

DETAIL C
SCALE: 3/4" = 1'-0"
S1.0

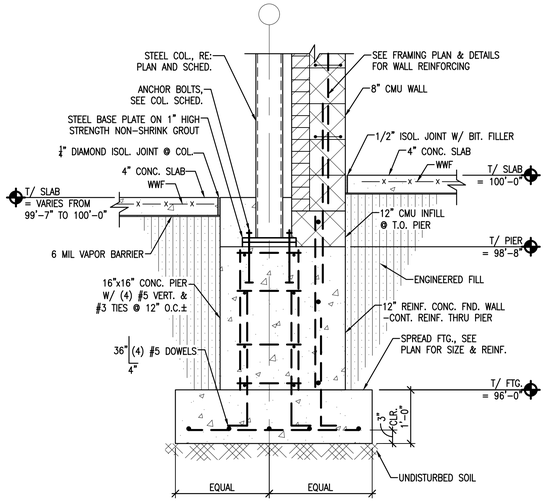

DETAIL D
SCALE: 3/4" = 1'-0"
S1.0

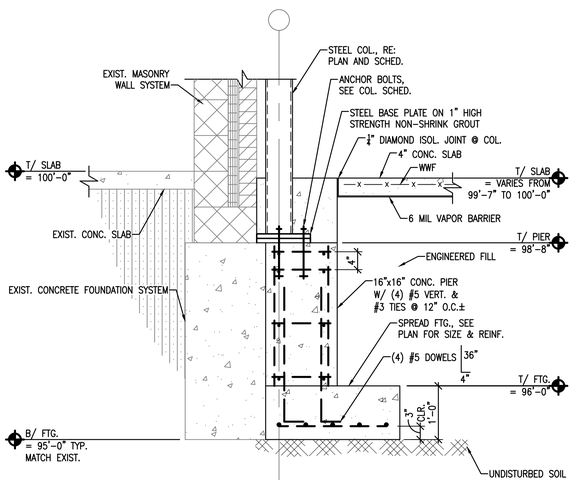

DETAIL E
SCALE: 3/4" = 1'-0"
S1.0

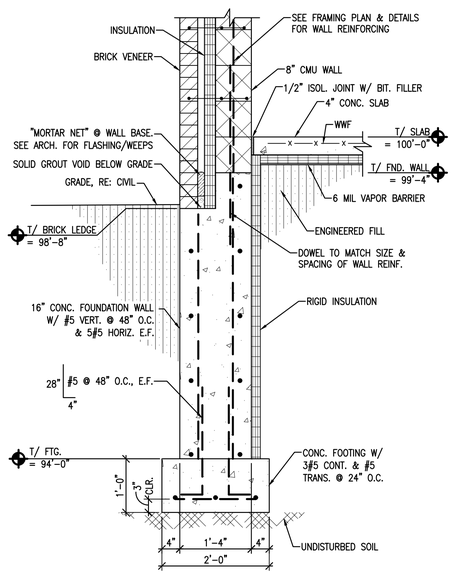

DETAIL F
SCALE: 3/4" = 1'-0"
S1.0

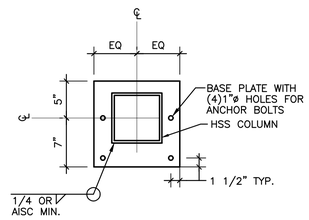

OFFSET FOUR BOLT BASE PLATE
NO SCALE

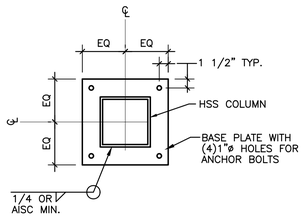

FOUR BOLT BASE PLATE
NO SCALE

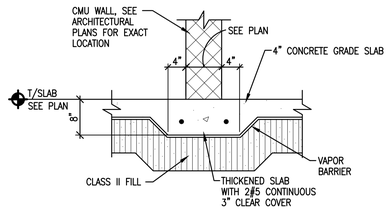

THICKENED SLAB
SCALE: 3/4" = 1'-0"

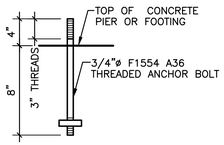

TYPICAL COL. ANCHORS
NO SCALE

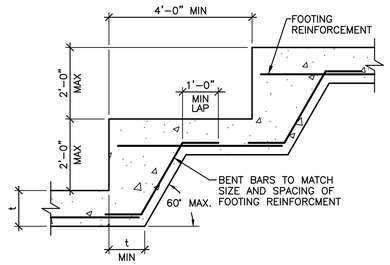

FOOTING STEP DETAIL
NO SCALE

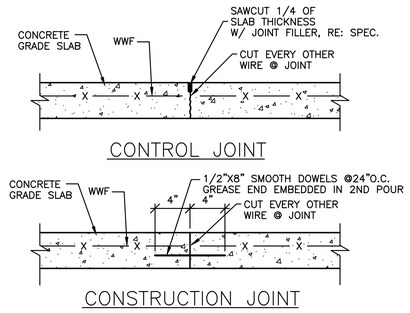

CONTROL/ CONSTRUCTION JOINTS
NO SCALE

MARQUETTE OFFICE:
1021 W. BARAGA AVENUE
MARQUETTE, MI 49855
PHONE: (906)228-4400
FAX: (906)228-7524

BRIGHTON OFFICE:
10101 GRAND RIVER AVE., SUITE 600
BRIGHTON, MI 48116
PHONE: (810)225-2701
FAX: (810)225-8787

INTEGRATED DESIGNS INC.
ARCHITECTURE ENGINEERING CONSULTING

HARBOR BEACH COMMUNITY SCHOOLS
PHASE 1 - 2026 ADDITION & RENOVATIONS
HARBOR BEACH, MICHIGAN
PROJECT NO. 24-138

	BY	DATE
DESIGN	PDN	03.13.26
DRAWN	PDN	03.13.26
CHECKED	PDN	08.26.26
APPROVED	PDN	08.26.26

NO.	REVISIONS	DATE
A	95% OWNER REVIEW	08.03.26
0	FOR CONSTRUCTION	08.28.26

ADDITION
FOUNDATION DETAILS

COPYRIGHT © 2017 INTEGRATED DESIGNS, INC.

S3.0

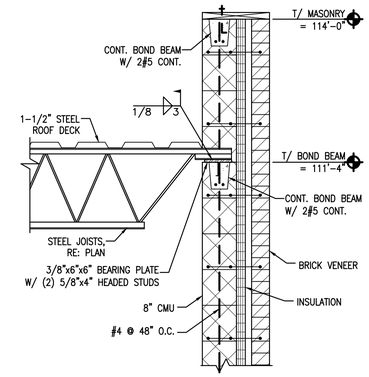

DETAIL 1 S2.0
SCALE: 3/4" = 1'-0"

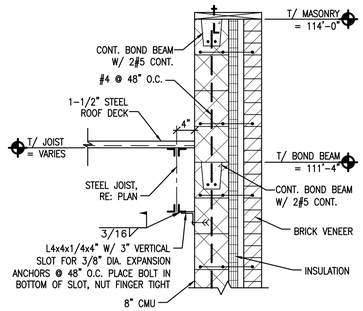

DETAIL 2 S2.0
SCALE: 3/4" = 1'-0"

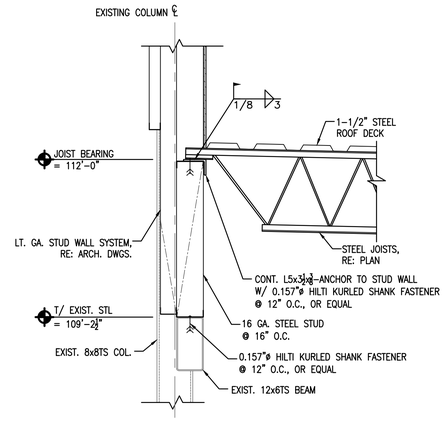

DETAIL 3 S2.0
SCALE: 3/4" = 1'-0"

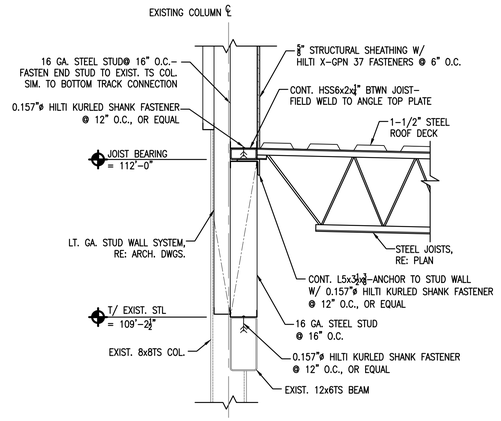

DETAIL 4 S2.0
SCALE: 3/4" = 1'-0"

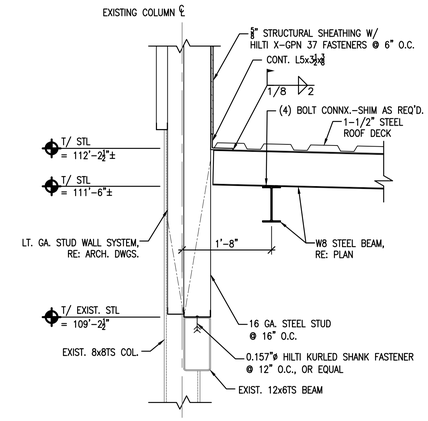

DETAIL 5 S2.0
SCALE: 3/4" = 1'-0"

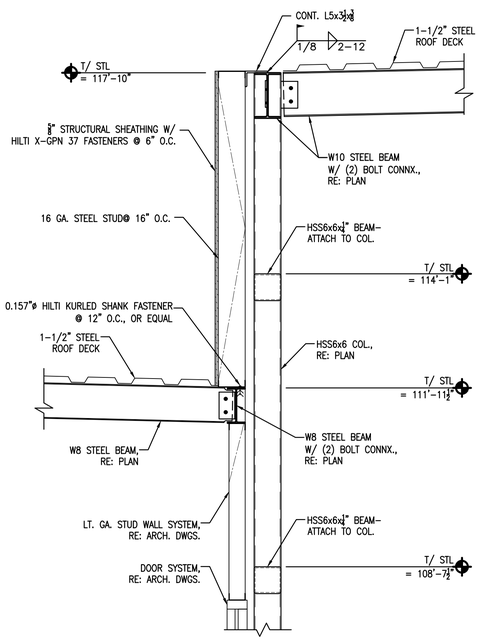

DETAIL 6 S2.0
SCALE: 3/4" = 1'-0"

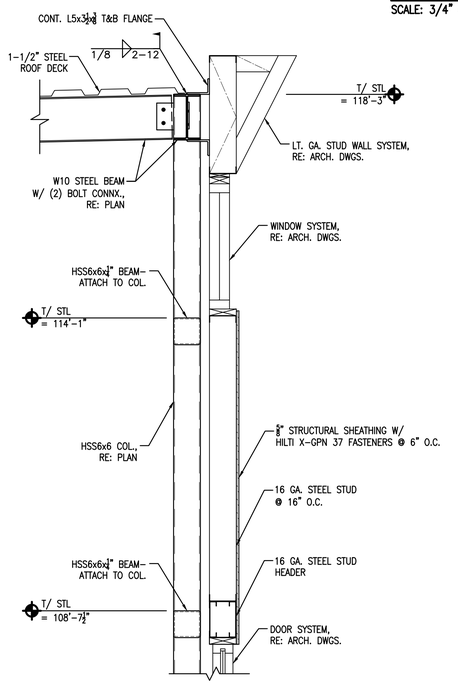

DETAIL 7 S2.0
SCALE: 3/4" = 1'-0"

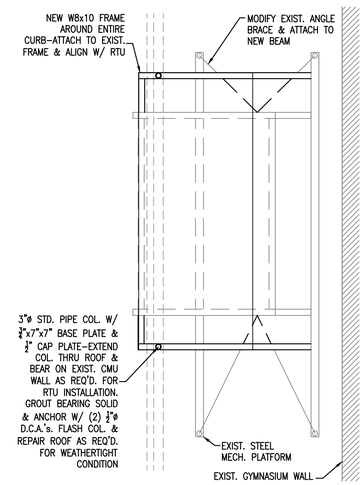

RTU-2 FRAME PLAN
SCALE: 1/4" = 1'-0"

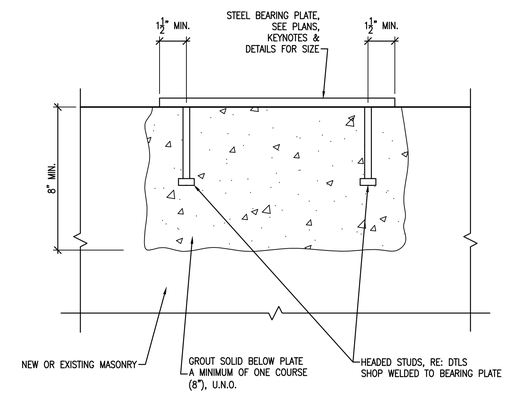

BEARING PLATE DETAIL
NO SCALE

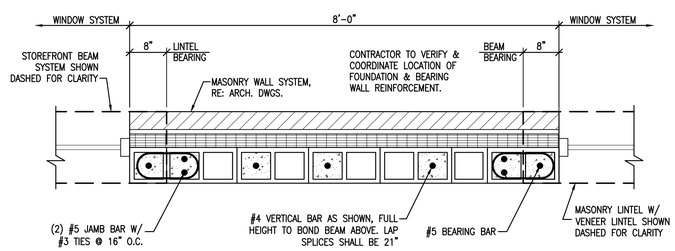

DETAIL 8 S2.0
SCALE: 3/4" = 1'-0"

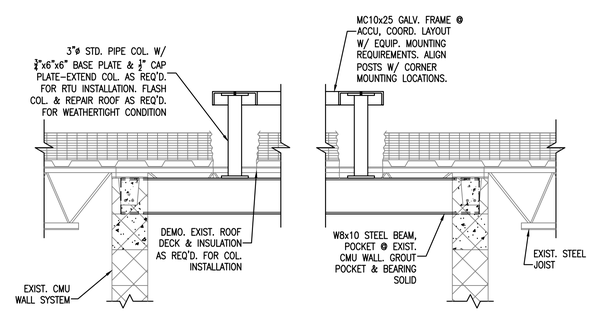

MAU-1 FRAME DTL
SCALE: 3/4" = 1'-0"

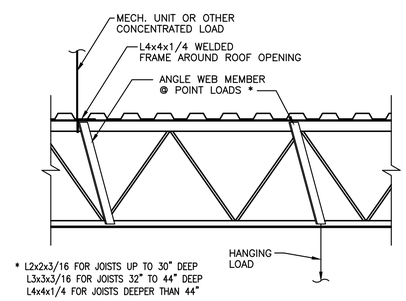

TYPICAL JOIST REINFORCING DETAIL
NO SCALE

MARQUETTE OFFICE:
1021 W. BARAGA AVENUE
MARQUETTE, MI 49855
PHONE: (906)228-4400
FAX: (906)228-7524

BRIGHTON OFFICE:
10525 CLARK STREET, SUITE 600
BRIGHTON, MI 48116
PHONE: (810)229-2701
FAX: (810)229-8187

INTEGRATED DESIGNS INC.
ARCHITECTURE ENGINEERING CONSULTING

HARBOR BEACH COMMUNITY SCHOOLS
PHASE 1 - 2026 ADDITION & RENOVATIONS
HARBOR BEACH, MICHIGAN
PROJECT NO. 24-138

	BY	DATE	NO.	REVISIONS	DATE
DESIGN	PDN	03.13.26	A	95% OWNER REVIEW	08.03.26
DRAWN	PDN	03.13.26	0	FOR CONSTRUCTION	08.28.26
CHECKED	PDN	08.26.26	---	---	---
APPROVED	PDN	08.26.26	---	---	---

ADDITION
ROOF FRAMING DETAILS

COPYRIGHT © 2017 INTEGRATED DESIGNS INC.

S4.0

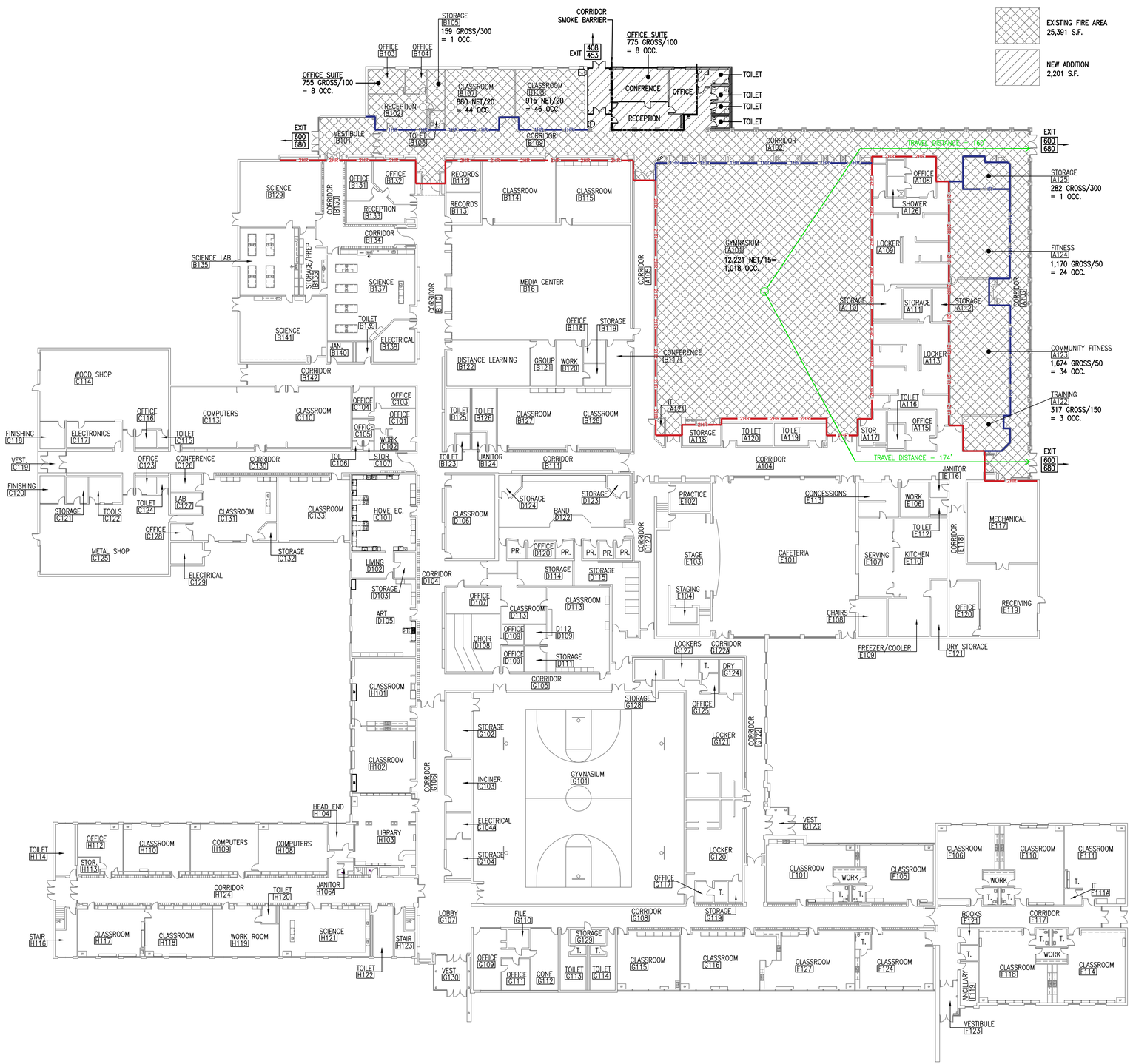
EXISTING FIRE AREA
25,391 S.F.
NEW ADDITION
2,201 S.F.
CORRIDOR SMOKE BARRIER
OFFICE SUITE
775 GROSS/100
= 8 OCC.
OFFICE SUITE
755 GROSS/100
= 8 OCC.
STORAGE
B105
159 GROSS/300
= 1 OCC.
CLASSROOM
B102
880 NET/20
= 44 OCC.
CLASSROOM
B109
915 NET/20
= 46 OCC.
CONFERENCE
OFFICE
RECEPTION
TOILET
TOILET
TOILET
TOILET
EXIT
600
680
EXIT
408
453
TRAVEL DISTANCE = 150'
TRAVEL DISTANCE = 174'
GYMNASIUM
A101
12,221 NET/15=
1,018. OCC.
STORAGE
A125
282 GROSS/300
= 1 OCC.
FITNESS
A124
1,170 GROSS/50
= 24 OCC.
COMMUNITY FITNESS
A123
1,674 GROSS/50
= 34 OCC.
TRAINING
A122
317 GROSS/150
= 3 OCC.
MEDIA CENTER
B16
GYMNASIUM
G101
CAFETERIA
E101
STAGE
E103
STAGING
E104
CONCESSIONS
E113
KITCHEN
E110
SERVING
E107
CHAIRS
E108
FREEZER/COOLER
E109
DRY STORAGE
E121
RECEIVING
E119
MECHANICAL
E117
WOOD SHOP
C114
METAL SHOP
C125
ELECTRONICS
C117
COMPUTERS
C113
CLASSROOM
C110
CLASSROOM
C131
CLASSROOM
C133
HOME EC.
C101
LIVING
D102
ART
D105
CLASSROOM
H101
CLASSROOM
H102
HEAD END
H104
LIBRARY
H103
COMPUTERS
H110
COMPUTERS
H109
COMPUTERS
H108
CLASSROOM
H117
CLASSROOM
H118
WORK ROOM
H119
SCIENCE
H121
CLASSROOM
F101
CLASSROOM
F105
CLASSROOM
F106
CLASSROOM
F110
CLASSROOM
F111
CLASSROOM
F118
CLASSROOM
F114
CLASSROOM
F127
CLASSROOM
F124
CLASSROOM
G115
CLASSROOM
G116
CLASSROOM
D106
CLASSROOM
D113
CLASSROOM
D107
CHOIR
D108
D112
D109
INCINER.
G103
ELECTRICAL
G104A
STORAGE
G104
LOCKER
G120
LOCKER
G121
OFFICE
G117
VESTIBULE
F123
VESTIBULE
G130
LOBBY
G107
STAIR
H116
STAIR
H123
TOILET
H114
TOILET
H122
TOILET
H120
TOILET
G113
TOILET
G114
TOILET
F112
TOILET
F115
TOILET
F116
TOILET
E112
TOILET
C115
TOILET
C124
TOILET
B125
TOILET
B126
TOILET
B123
TOILET
A120
TOILET
A119
TOILET
A116
TOILET
B139
TOILET
C122
TOILET
D104
TOILET
D103
TOILET
D111
TOILET
D109
TOILET
D120
TOILET
D114
TOILET
D115
TOILET
D123
TOILET
D122
TOILET
B133
TOILET
B134
TOILET
B142
TOILET
B130
TOILET
B131
TOILET
B132
TOILET
B112
TOILET
B113
TOILET
B114
TOILET
B115
TOILET
B122
TOILET
B121
TOILET
B120
TOILET
B119
TOILET
B118
TOILET
B117
TOILET
A121
TOILET
A118
TOILET
A120
TOILET
A119
TOILET
A116
TOILET
A115
TOILET
A108
TOILET
A109
TOILET
A110
TOILET
A111
TOILET
A112
TOILET
A113
TOILET
A117
TOILET
A102
TOILET
A101
TOILET
A104
TOILET
A105
TOILET
A106
TOILET
A107
TOILET
A108
TOILET
A109
TOILET
A110
TOILET
A111
TOILET
A112
TOILET
A113
TOILET
A114
TOILET
A115
TOILET
A116
TOILET
A117
TOILET
A118
TOILET
A119
TOILET
A120
TOILET
A121
TOILET
A122
TOILET
A123
TOILET

FLOOR TRANSITIONS

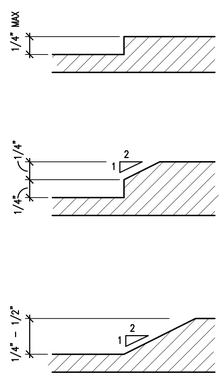

ACCESSIBLE MANUEVERING CLEARANCES

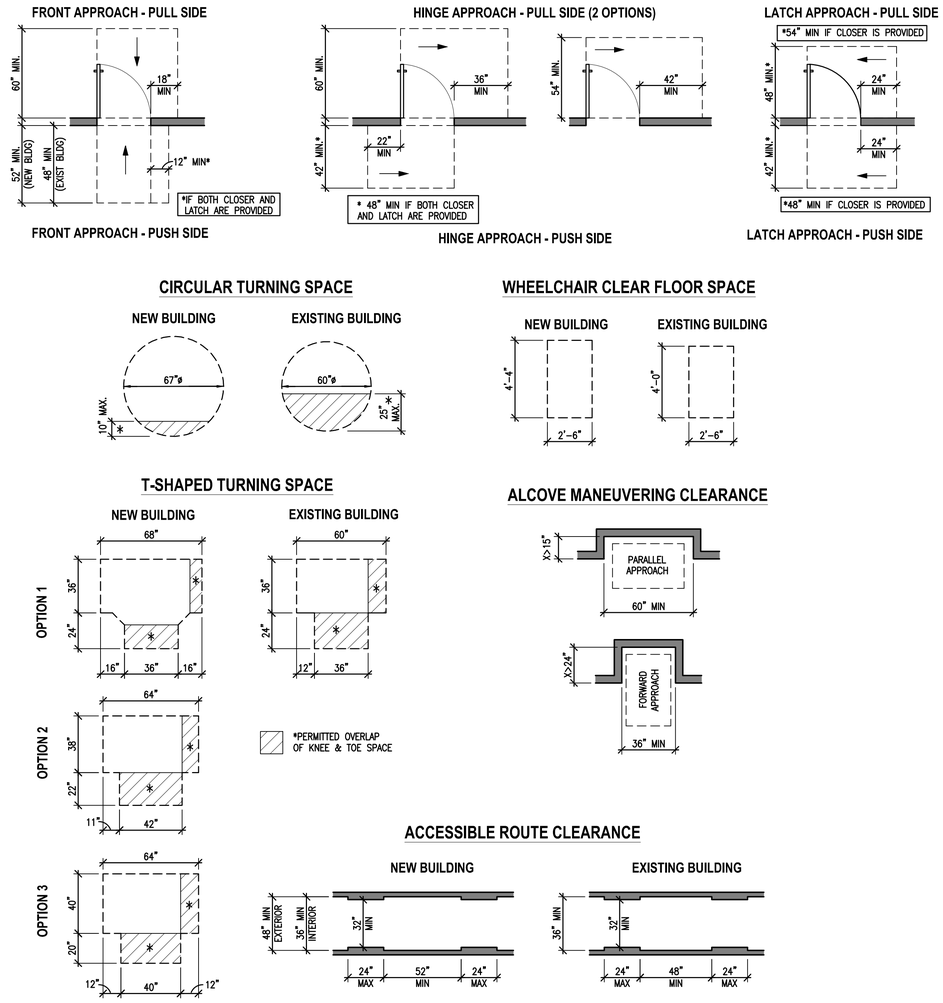

GRAPHIC SYMBOLS

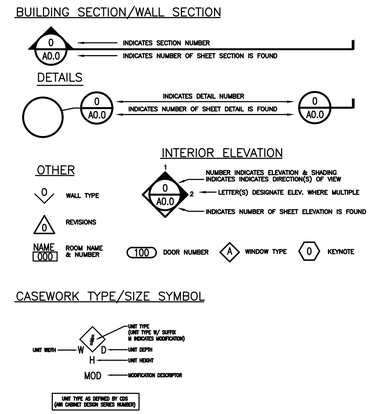

GENERAL NOTES

1. TRANSITION AND REDUCER STRIPS TO MATCH COLOR OF FLOORING, UNLESS OTHERWISE NOTED.
2. TRANSITION ALL FLOOR FINISHES AT CENTER OF DOOR, UNLESS OTHERWISE NOTED.
3. WHERE TWO OR MORE FINISHES APPEAR IN THE FINISH SCHEDULE FOR ONE SURFACE, REFER TO PLANS, DETAILS AND ELEVATIONS FOR ADDITIONAL INFORMATION.
4. RECESSED WIREWAYS, ACCESS PANELS, GRILLES, FIRE EXTINGUISHER CABINETS, ELECTRICAL PANELS AND ALL OTHER SUCH ARCHITECTURAL, ELECTRICAL, AND MECHANICAL DEVICES SHALL BE FINISHED TO MATCH ADJACENT WALL OR CEILING SURFACE, UNLESS OTHERWISE NOTED.
5. ALL PAINT TO BE LOW VOC.
6. ROOM: SEE FLOOR PLAN(S) FOR LOCATION OF ROOM NUMBERS AND NAMES.
7. CEILING TYPE, FLOOR, AND BASE: SEE "CODE TO ROOM FINISH SCHEDULE" FOR DEFINITION OF DESIGNATIONS.
8. WALLS: SEE "CODE TO ROOM FINISH SCHEDULE" FOR DEFINITION OF DESIGNATIONS IN TYPICAL, NORTH, SOUTH, EAST AND WEST COLUMNS.
9. REMARKS: SEE "REMARKS TO FINISH SCHEDULE".

TYP. ACCESSIBLE MOUNTING HEIGHTS

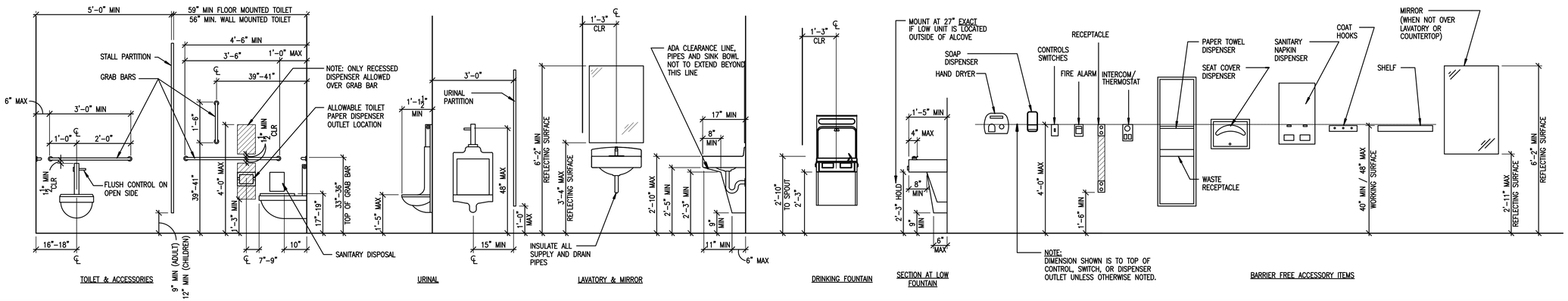

INTEGRATED DESIGNS INC.
ARCHITECTURE ENGINEERING CONSULTING
MARQUETTE OFFICE:
1021 W. BARAGA AVENUE
MARQUETTE, MI 49855
PHONE: (906)228-5660
FAX: (906)228-7524
BRIGHTON OFFICE:
8571 W. GRAND RIVER AVE., SUITE 600
BRIGHTON, MI 48116
PHONE: (810)229-2701
FAX: (810)229-2707

HARBOR BEACH COMMUNITY SCHOOLS
PHASE 1 - 2026 ADDITION & RENOVATIONS
HARBOR BEACH, MICHIGAN
PROJECT NO. 24-138

NO.	REVISIONS	DATE
0	FOR CONSTRUCTION	8-28-26

	BY	DATE
DESIGN	-	-
DRAWN	-	-
CHECKED	-	-
APPROVED	-	-

GENERAL NOTES, SYMBOL LEGEND & REQUIREMENTS

G0.2

COPYRIGHT © 2026 INTEGRATED DESIGNS INC.

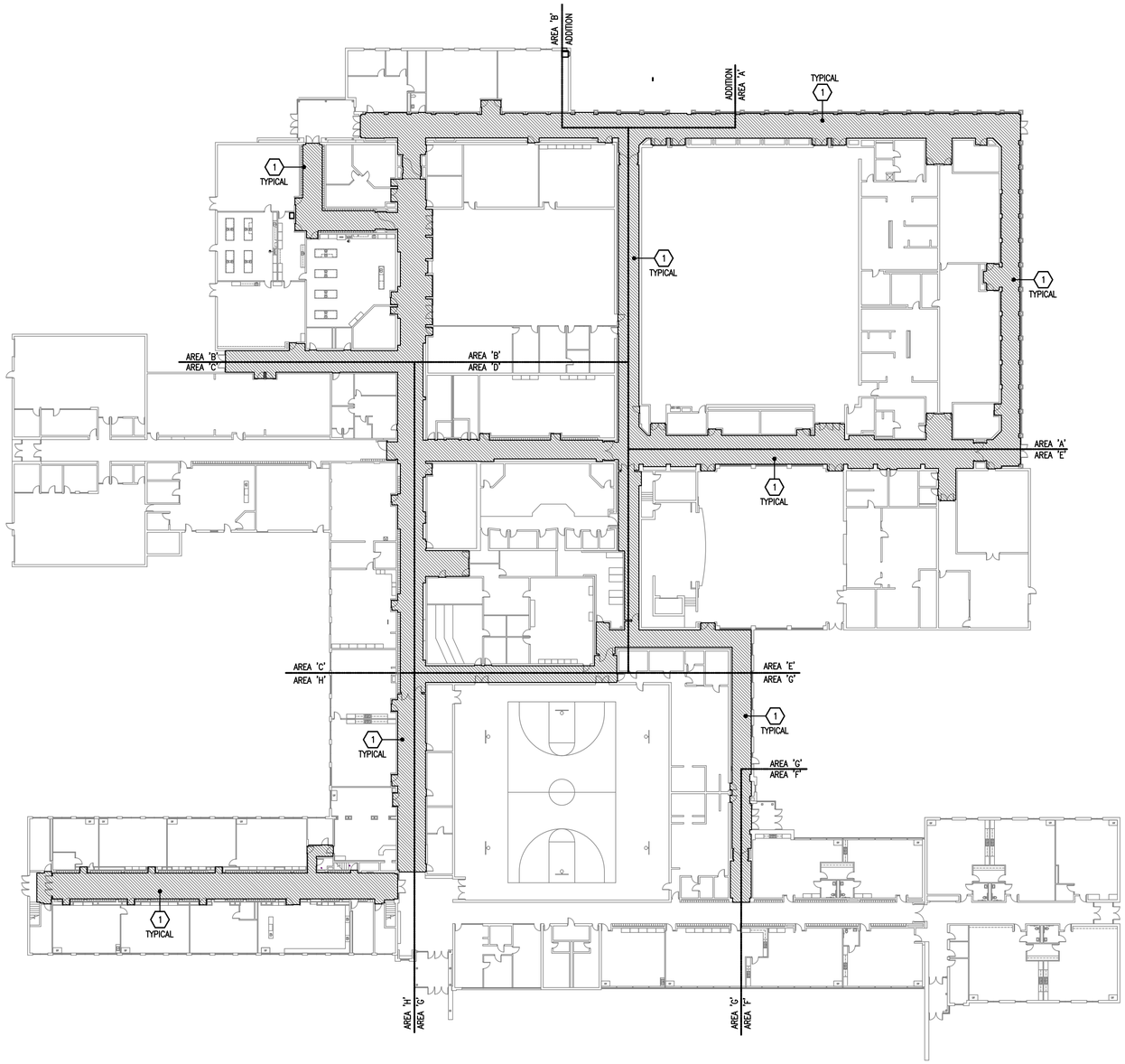

CORRIDOR DEMOLITION PLAN - FIRST FLOOR

SCALE: 1" = 30'-0"

N

REFER TO SUBSEQUENT A1 SERIES SHEETS FOR ADDITIONAL DEMOLITION SCOPE

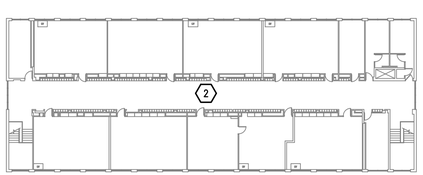

SECOND FLOOR

SCALE: 1" = 30'-0"

N

KEYNOTES

1. HATCHED AREA INDICATES REMOVAL OF EXISTING VINYL COMPOSITION FLOOR TILE AND RESILIENT WALL BASE (WHERE EXISTS) IN CORRIDORS. REMOVE ALL ASSOCIATED ADHESIVES, ACCESSORIES, AND INCIDENTALS. PREPARE EXISTING CONCRETE FLOOR SLAB FOR NEW FLOOR FINISH. APPROXIMATE CORRIDOR FLOORING REMOVAL AND REPLACEMENT OF 21,850 SQUARE FEET. REFER TO FLOOR FINISH PLAN SHEET A7.1 FOR NEW FLOORING
2. NO WORK ON SECOND FLOOR

ASBESTOS NOTE

ASBESTOS TESTING AND SUBSEQUENT ASBESTOS ABATEMENT IS TO BE PREFORMED BY QUALIFIED ASBESTOS TESTING AND ABATEMENT CONTRACTOR AND IS THE RESPONSIBILITY OF BUILDING OWNER. NOTED LOCATIONS OF ASBESTOS IN THIS PLAN SET MAY NOT REFLECT ALL ASBESTOS REQUIRING ABATEMENT. COORDINATE WITH ABATEMENT CONTRACTOR.

GENERAL NOTES

1. EXISTING CONDITIONS SHOWN ON THESE DRAWINGS HAVE BEEN OBTAINED FROM EXISTING DRAWINGS AND FIELD INSPECTIONS. CONTRACTOR SHALL BE RESPONSIBLE TO FIELD VERIFY THE EXISTING CONDITIONS REGARDING DEMOLITION AND NEW WORK BEFORE SUBMITTING A BID FOR THE PROJECT. CONTRACTOR SHALL REPORT ANY DISCREPANCIES TO OWNER OR OWNERS REPRESENTATIVE.
2. HALF-TONE LINES INDICATE EXISTING CONDITIONS. DASHED LINES INDICATE DEMOLITION WORK. BOLD LINES INDICATE NEW WORK. REFER TO KEYNOTES FOR DESCRIPTIONS.
3. ANY EXISTING CONDITIONS TO REMAIN THAT ARE DISTURBED ARE TO BE PATCHED/REPAIRED TO MATCH EXISTING ADJACENT CONDITIONS.
4. REFER ALSO TO ELECTRICAL, MECHANICAL, STRUCTURAL, AND CIVIL DRAWINGS AS APPLICABLE FOR ADDITIONAL SCOPE OF WORK.
5. ROOM NUMBERING SYSTEM USED IN THIS CONSTRUCTION DOCUMENT IS FOR ARCHITECTURAL PURPOSES. VERIFY ACTUAL ROOM NUMBERING/LAYOUT AS REQUIRED.
6. PROVIDING AND INSTALLING THE REPLACEMENT OF ANY NEW FINISHES, DOOR ASSEMBLIES, ETC. SHALL INCLUDE THE REMOVAL AND DISPOSAL OF EXISTING AND PREPARATION FOR NEW WORK IN ANY LOCATION WHERE APPLICABLE. REFERENCE NEW WORK PLANS FOR FULL SCOPE OF WORK.
7. ALL LOOSE FURNITURE TO BE REMOVED AND REINSTALLED BY OWNER.
8. INTERIOR/EXTERIOR DIMENSIONS ARE TO THE FINISHED FACE OF INDICATED WALL.

KEY PLAN

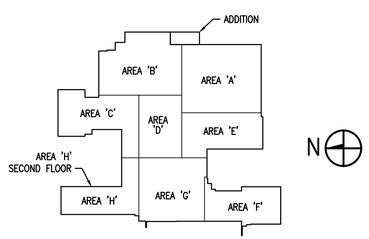

MARQUETTE OFFICE:
1021 W. BARAGA AVENUE
MARQUETTE, MI 49855
PHONE: (906)228-4480
FAX: (906)228-7524

BIRGHTON OFFICE:
5577 GRAND RIVER AVE., SUITE 600
BRIGHTON, MI 48116
PHONE: (810)229-2701
FAX: (810)229-6787

INTEGRATED DESIGNS INC.
ARCHITECTURE
ENGINEERING
CONSULTING

HARBOR BEACH COMMUNITY SCHOOLS
PHASE 1 - 2026 ADDITION & RENOVATIONS
HARBOR BEACH, MICHIGAN
PROJECT NO. 24-138

NO.	REVISIONS	DATE
0	FOR CONSTRUCTION	8-28-26

	BY	DATE
DESIGN		
DRAWN		
CHECKED		
APPROVED		

COMPOSITE
CORRIDOR DEMOLITION

COPYRIGHT © 2026 INTEGRATED DESIGNS INC.

A1.0

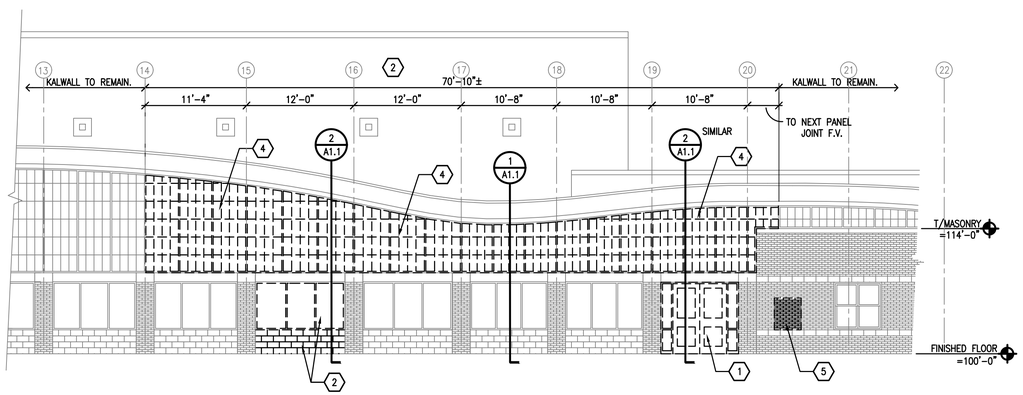

DEMOLITION ELEVATION

SCALE: 1/8" = 1'-0"

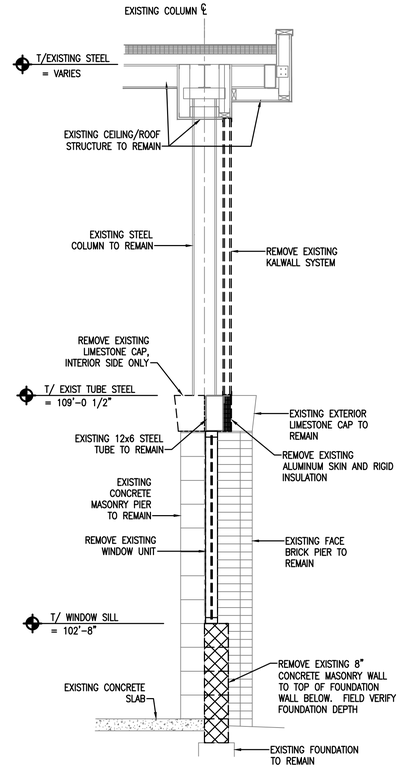

DEMOLITION SECTION 2/A1.1

SCALE = 1/2" = 1'-0"

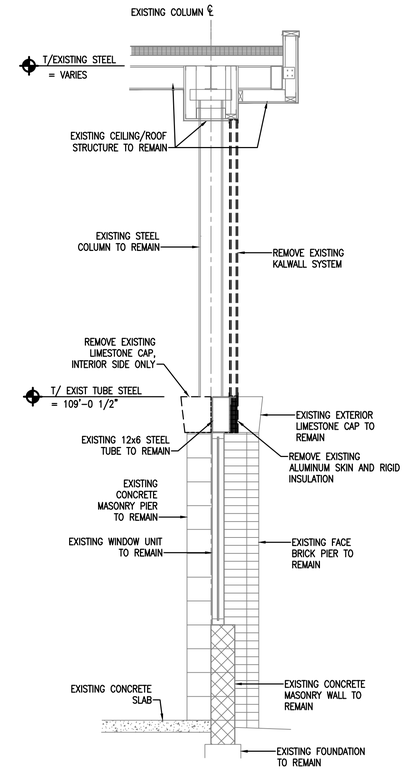

DEMOLITION SECTION 1/A1.1

SCALE = 1/2" = 1'-0"

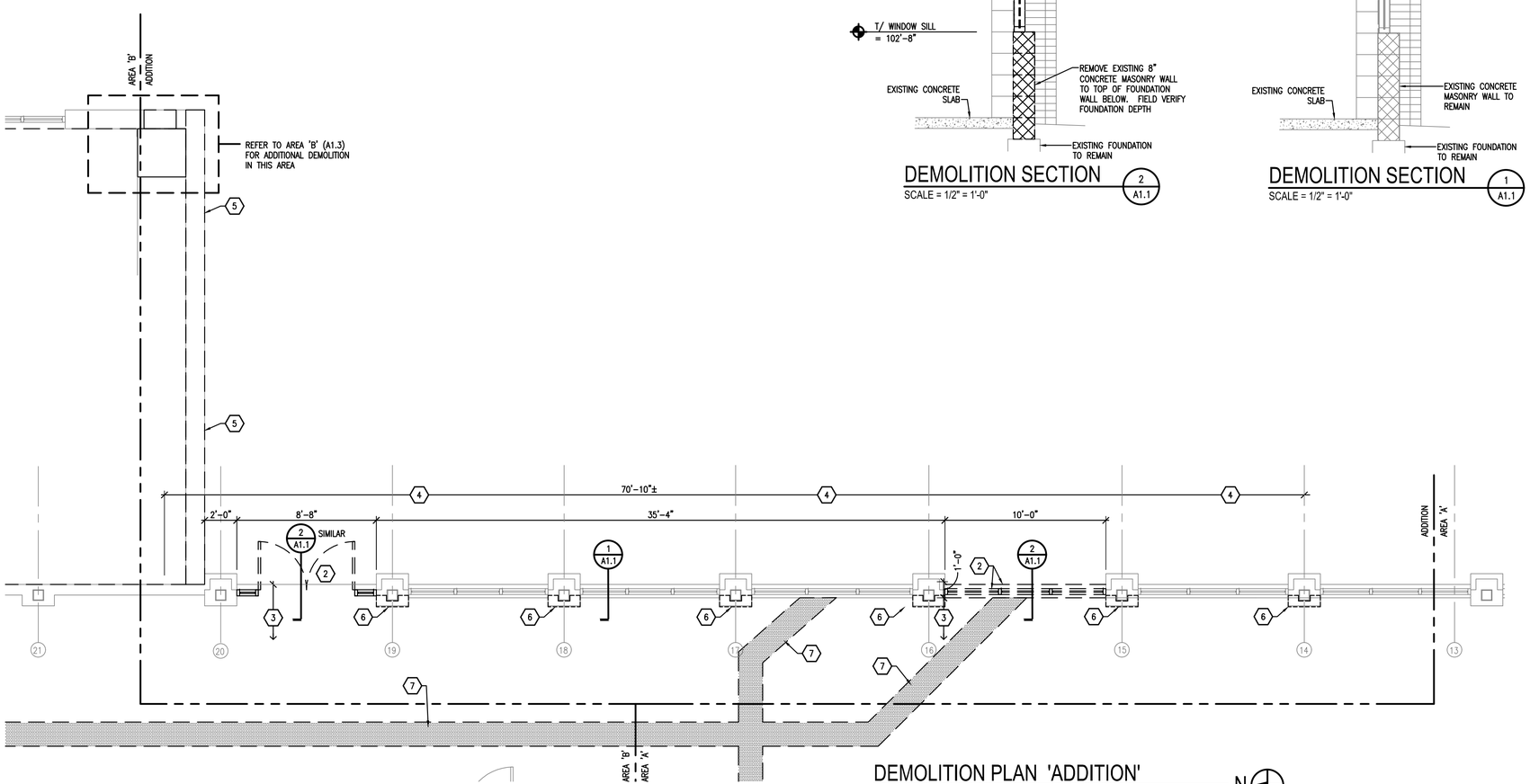

DEMOLITION PLAN 'ADDITION'

SCALE: 1/4" = 1'-0"

REFER TO A1.0 CORRIDOR DEMOLITION FOR ADDITIONAL DEMOLITION SCOPE IN EXISTING CORRIDORS

KEYNOTES

1. REMOVE EXISTING DOOR(S), FRAME,GLAZING, AND HARDWARE IN THEIR ENTIRETY. REMOVE ALL ASSOCIATED FASTENERS AND ACCESSORIES.
2. REMOVE EXISTING WINDOW UNIT IN IT'S ENTIRETY. REMOVE EXISTING 8" CONCRETE MASONRY WALL. REMOVE FROM SILL DOWN TO TOP OF EXISTING FOUNDATION SYSTEM, FIELD VERIFY.
3. EXISTING CONCRETE SLAB TO REMAIN.
4. REMOVE EXISTING KALWALL PANEL SYSTEM ABOVE. REFER TO DEMOLITION ELEVATION. REMOVE ALL ASSOCIATED FASTENERS AND ACCESSORIES. REMOVE TO NEAREST COMPLETE PANEL ON EACH END, APPROXIMATELY 550 S.F. FIELD VERIFY.
5. REMOVE EXISTING METAL PARAPET CAP AT ROOF ABOVE TO ACCOMMODATE NEW WORK. EXISTING WOOD BLOCKING AND MEMBRANE ROOFING TO REMAIN.
6. REMOVE LIMESTONE CAP AT TOP OF MASONRY PIER, INTERIOR SIDE ONLY. REFER TO DEMOLITION SECTION.
7. HATCHED AREA INDICATES SAW CUT AND REMOVAL OF EXISTING CONCRETE FLOOR SLAB TO ACCOMMODATE NEW UNDERGROUND PLUMBING AND ELECTRICAL WORK. COORDINATE LOCATION AND EXTENTS WITH PLUMBING/ELECTRICAL CONTRACTOR AND PLUMBING/ELECTRICAL PLANS.

GENERAL NOTES

1. EXISTING CONDITIONS SHOWN ON THESE DRAWINGS HAVE BEEN OBTAINED FROM EXISTING DRAWINGS AND FIELD INSPECTIONS. CONTRACTOR SHALL BE RESPONSIBLE TO FIELD VERIFY THE EXISTING CONDITIONS REGARDING DEMOLITION AND NEW WORK BEFORE SUBMITTING A BID FOR THE PROJECT. CONTRACTOR SHALL REPORT ANY DISCREPANCIES TO OWNER OR OWNERS REPRESENTATIVE.
2. HALF-TONE LINES INDICATE EXISTING CONDITIONS. DASHED LINES INDICATE DEMOLITION WORK. BOLD LINES INDICATE NEW WORK. REFER TO KEYNOTES FOR DESCRIPTIONS.
3. ANY EXISTING CONDITIONS TO REMAIN THAT ARE DISTURBED ARE TO BE PATCHED/REPAIRED TO MATCH EXISTING ADJACENT CONDITIONS.
4. REFER ALSO TO ELECTRICAL, MECHANICAL, STRUCTURAL, AND CIVIL DRAWINGS AS APPLICABLE FOR ADDITIONAL SCOPE OF WORK.
5. ROOM NUMBERING SYSTEM USED IN THIS CONSTRUCTION DOCUMENT IS FOR ARCHITECTURAL PURPOSES. VERIFY ACTUAL ROOM NUMBERING/LAYOUT AS REQUIRED.
6. PROVIDING AND INSTALLING THE REPLACEMENT OF ANY NEW FINISHES, DOOR ASSEMBLIES, ETC. SHALL INCLUDE THE REMOVAL AND DISPOSAL OF EXISTING AND PREPARATION FOR NEW WORK IN ANY LOCATION WHERE APPLICABLE. REFERENCE NEW WORK PLANS FOR FULL SCOPE OF WORK.
7. ALL LOOSE FURNITURE TO BE REMOVED AND REINSTALLED BY OWNER.
8. INTERIOR/EXTERIOR DIMENSIONS ARE TO THE FINISHED FACE OF INDICATED WALL.

KEY PLAN

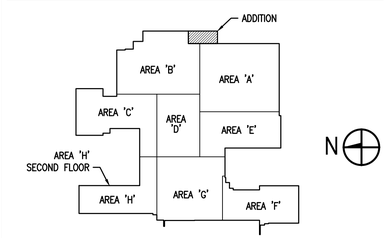

MARQUETTE OFFICE:
1021 W. BARAGA AVENUE
MARQUETTE, MI 49855
PHONE: (906)228-4403
FAX: (906)228-7524

BIRGHTON OFFICE:
201 CENTER RIDGE DRIVE, SUITE 600
BIRGHTON, MI 48116
PHONE: (810)229-2701
FAX: (810)229-6787

INTEGRATED DESIGNS INC.
ARCHITECTURE ENGINEERING CONSULTING

HARBOR BEACH COMMUNITY SCHOOLS
PHASE 1 - 2026 ADDITION & RENOVATIONS
HARBOR BEACH, MICHIGAN
PROJECT NO. 00-000

NO.	REVISIONS	DATE
0	FOR CONSTRUCTION	8-28-26

	BY	DATE
DESIGN		
DRAWN		
CHECKED		
APPROVED		

DEMOLITION PLAN ADDITION

COPYRIGHT © 2026 INTEGRATED DESIGNS INC.

A1.1

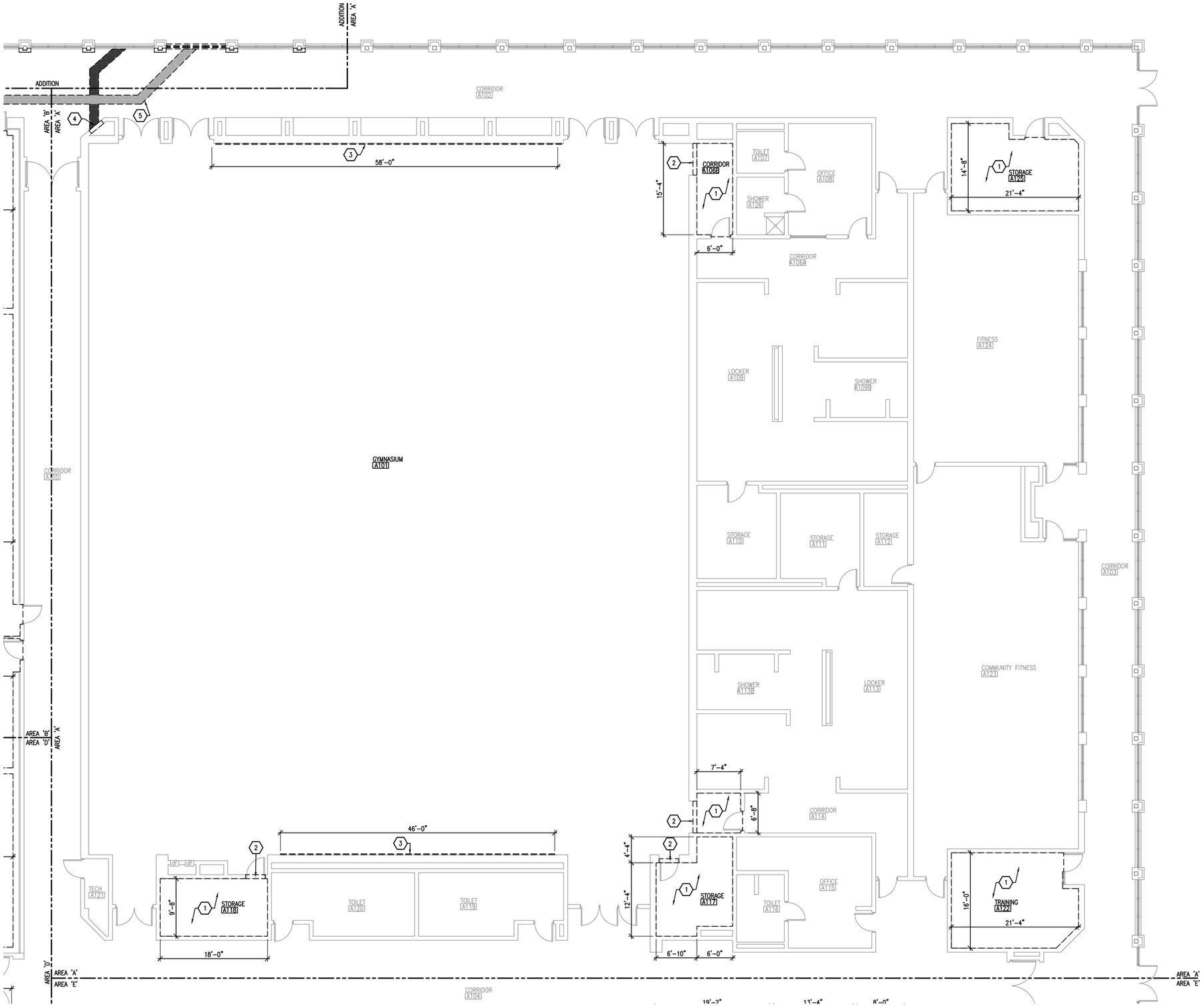

DEMOLITION PLAN AREA 'A'

SCALE: 1/8" = 1'-0"

N

REFER TO A1.0 CORRIDOR DEMOLITION FOR ADDITIONAL DEMOLITION SCOPE IN EXISTING CORRIDORS

KEYNOTES

1. REMOVE EXISTING VINYL COMPOSITION FLOOR TILE AND RESILIENT WALL BASE. REMOVE ALL ASSOCIATED ADHESIVES, ACCESSORIES, AND INCIDENTALS. PREPARE EXISTING CONCRETE FLOOR SLAB FOR NEW FLOOR FINISH.
2. REMOVE EXISTING METAL THRESHOLD WHERE DIFFERING FLOORING ABUTS. REMOVE ASSOCIATED FASTENERS AND ACCESSORIES. SALVAGE THRESHOLD FOR REINSTALLATION WHEN FLOORING WORK IS COMPLETE.
3. REMOVE EXISTING WALL PADDING. REMOVE ALL ASSOCIATED FASTENERS AND ACCESSORIES.
4. REMOVE PORTION OF EXISTING 8" CONCRETE MASONRY AS NEEDED TO ACCOMMODATE INSTALLATION OF ELECTRICAL AND PLUMBING ITEMS. REFER TO AND COORDINATE EXTENTS WITH ELECTRICAL/PLUMBING DRAWINGS AND CONTRACTOR.
5. HATCHED AREA INDICATES SAW CUT AND REMOVAL OF EXISTING CONCRETE FLOOR SLAB TO ACCOMMODATE NEW UNDERGROUND PLUMBING AND ELECTRICAL WORK. COORDINATE LOCATION AND EXTENTS WITH PLUMBING/ELECTRICAL CONTRACTOR AND PLUMBING/ELECTRICAL PLANS.

ASBESTOS NOTE

ASBESTOS TESTING AND SUBSEQUENT ASBESTOS ABATEMENT IS TO BE PREFORMED BY QUALIFIED ASBESTOS TESTING AND ABATEMENT CONTRACTOR AND IS THE RESPONSIBILITY OF BUILDING OWNER. NOTED LOCATIONS OF ASBESTOS IN THIS PLAN SET MAY NOT REFLECT ALL ASBESTOS REQUIRING ABATEMENT. COORDINATE WITH ABATEMENT CONTRACTOR.

GENERAL NOTES

1. EXISTING CONDITIONS SHOWN ON THESE DRAWINGS HAVE BEEN OBTAINED FROM EXISTING DRAWINGS AND FIELD INSPECTIONS. CONTRACTOR SHALL BE RESPONSIBLE TO FIELD VERIFY THE EXISTING CONDITIONS REGARDING DEMOLITION AND NEW WORK BEFORE SUBMITTING A BID FOR THE PROJECT. CONTRACTOR SHALL REPORT ANY DISCREPANCIES TO OWNER OR OWNERS REPRESENTATIVE.
2. HALF-TONE LINES INDICATE EXISTING CONDITIONS. DASHED LINES INDICATE DEMOLITION WORK. BOLD LINES INDICATE NEW WORK. REFER TO KEYNOTES FOR DESCRIPTIONS.
3. ANY EXISTING CONDITIONS TO REMAIN THAT ARE DISTURBED ARE TO BE PATCHED/REPAIRED TO MATCH EXISTING ADJACENT CONDITIONS.
4. REFER ALSO TO ELECTRICAL, MECHANICAL, STRUCTURAL, AND CIVIL DRAWINGS AS APPLICABLE FOR ADDITIONAL SCOPE OF WORK.
5. ROOM NUMBERING SYSTEM USED IN THIS CONSTRUCTION DOCUMENT IS FOR ARCHITECTURAL PURPOSES. VERIFY ACTUAL ROOM NUMBERING/LAYOUT AS REQUIRED.
6. PROVIDING AND INSTALLING THE REPLACEMENT OF ANY NEW FINISHES, DOOR ASSEMBLIES, ETC. SHALL INCLUDE THE REMOVAL AND DISPOSAL OF EXISTING AND PREPARATION FOR NEW WORK IN ANY LOCATION WHERE APPLICABLE. REFERENCE NEW WORK PLANS FOR FULL SCOPE OF WORK.
7. ALL LOOSE FURNITURE TO BE REMOVED AND REINSTALLED BY OWNER.
8. INTERIOR/EXTERIOR DIMENSIONS ARE TO THE FINISHED FACE OF INDICATED WALL.

KEY PLAN

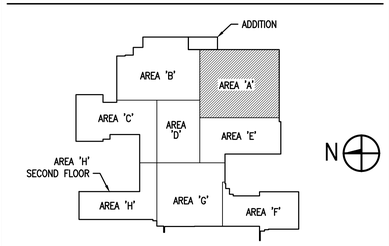

MARQUETTE OFFICE:
1021 W. BARAGA AVENUE
MARQUETTE, MI 49855
PHONE: (906)228-4400
FAX: (906)228-7524

BIRCHTON OFFICE:
5075 CLAY AVENUE, SUITE 600
BIRCHTON, MI 48015
PHONE: (810)229-2701
FAX: (810)229-6787

INTEGRATED DESIGNS INC.
ARCHITECTURE
ENGINEERING
CONSULTING

HARBOR BEACH COMMUNITY SCHOOLS
PHASE 1 - 2026 ADDITION & RENOVATIONS
HARBOR BEACH, MICHIGAN
PROJECT NO. 24-138

NO.	REVISIONS	DATE
0	FOR CONSTRUCTION	8-28-26

	BY	DATE
DESIGN		
DRAWN		
CHECKED		
APPROVED		

DEMOLITION PLAN
AREA 'A'

COPYRIGHT © 2026 INTEGRATED DESIGNS INC.

A1.2

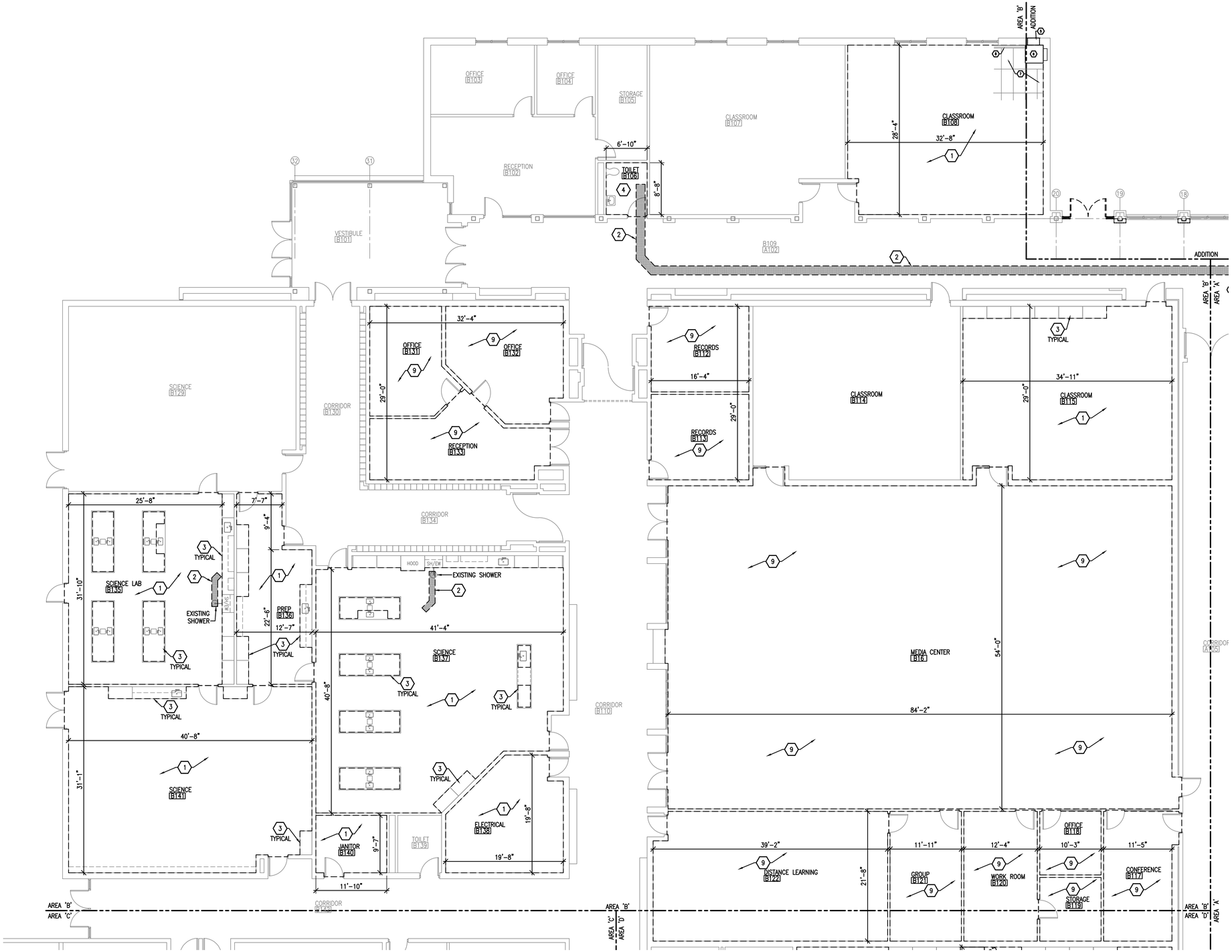

DEMOLITION PLAN AREA 'B'

SCALE: 1/8" = 1'-0"

N

REFER TO A1.0 CORRIDOR DEMOLITION FOR ADDITIONAL DEMOLITION SCOPE IN EXISTING CORRIDORS

KEYNOTES

1. REMOVE EXISTING VINYL COMPOSITION FLOOR TILE AND RESILIENT WALL BASE. REMOVE ALL ASSOCIATED ADHESIVES, ACCESSORIES, AND INCIDENTALS. PREPARE EXISTING CONCRETE FLOOR SLAB FOR NEW FLOOR FINISH.
2. HATCHED AREA INDICATES SAW CUT AND REMOVAL OF EXISTING CONCRETE FLOOR SLAB TO ACCOMMODATE NEW PLUMBING WORK. COORDINATE LOCATION AND EXTENTS WITH PLUMBING CONTRACTOR AND PLUMBING PLANS.
3. EXISTING CASEWORK TO REMAIN, REMOVE EXISTING RESILIENT WALL BASE WHERE INSTALLED (FIELD VERIFY). FIELD VERIFY LOCATIONS WHERE EXISTING FLOORING RUNS UNDER CASEWORK INCLUDING, BUT NOT LIMITED TO, BOOK SHELVES, WARDROBE CABINETS, ETC. REMOVE AND SALVAGE FOR REINSTALLATION CASEWORK AS NEEDED TO ACCOMMODATE REMOVAL OF EXISTING FLOORING.
4. REMOVE EXISTING CERAMIC TILE FLOORING AND WALL BASE. REMOVE ALL ASSOCIATED INCIDENTALS AND ACCESSORIES. COORDINATE CONCRETE CUTTING WITH PLUMBING CONTRACTOR, REFER TO PLUMBING DRAWINGS.
5. REMOVE PORTION OF EXISTING FACE BRICK AND MASONRY WALL AS NEEDED TO ACCOMMODATE MECHANICAL LOUVER RELOCATION AND NEW MECHANICAL LINTEL INSTALLATION. COORDINATE EXACT SIZE AND LOCATION WITH MECHANICAL CONTRACTOR.
6. REMOVE EXISTING MECHANICAL UNIT AND CORRESPONDING WALL LOUVER. SALVAGE FOR REINSTALLATION. REFER TO AND COORDINATE WITH MECHANICAL PLANS.
7. EXISTING CEILING TILES AND GRID ABOVE TO REMAIN. REMOVE AS NEEDED TO ACCOMMODATE NEW WORK IN THIS AREA. FIELD VERIFY EXTENTS, SALVAGE FOR REINSTALLATION.
8. EXISTING ROLLING TRACK AND VALANCE AT CEILING LEVEL TO REMAIN
9. REMOVE EXISTING CARPET AND VINYL BASE. REMOVE ALL ASSOCIATED ACCESSORIES AND INCIDENTALS. PREPARE EXISTING CONCRETE SLAB FOR NEW FLOOR FINISH.

ASBESTOS NOTE

ASBESTOS TESTING AND SUBSEQUENT ASBESTOS ABATEMENT IS TO BE PREFORMED BY QUALIFIED ASBESTOS TESTING AND ABATEMENT CONTRACTOR AND IS THE RESPONSIBILITY OF BUILDING OWNER. NOTED LOCATIONS OF ASBESTOS IN THIS PLAN SET MAY NOT REFLECT ALL ASBESTOS REQUIRING ABATEMENT. COORDINATE WITH ABATEMENT CONTRACTOR.

GENERAL NOTES

1. EXISTING CONDITIONS SHOWN ON THESE DRAWINGS HAVE BEEN OBTAINED FROM EXISTING DRAWINGS AND FIELD INSPECTIONS. CONTRACTOR SHALL BE RESPONSIBLE TO FIELD VERIFY THE EXISTING CONDITIONS REGARDING DEMOLITION AND NEW WORK BEFORE SUBMITTING A BID FOR THE PROJECT. CONTRACTOR SHALL REPORT ANY DISCREPANCIES TO OWNER OR OWNERS REPRESENTATIVE.
2. HALF-TONE LINES INDICATE EXISTING CONDITIONS. DASHED LINES INDICATE DEMOLITION WORK. BOLD LINES INDICATE NEW WORK. REFER TO KEYNOTES FOR DESCRIPTIONS.
3. ANY EXISTING CONDITIONS TO REMAIN THAT ARE DISTURBED ARE TO BE PATCHED/REPAIRED TO MATCH EXISTING ADJACENT CONDITIONS.
4. REFER ALSO TO ELECTRICAL, MECHANICAL, STRUCTURAL, AND CIVIL DRAWINGS AS APPLICABLE FOR ADDITIONAL SCOPE OF WORK.
5. ROOM NUMBERING SYSTEM USED IN THIS CONSTRUCTION DOCUMENT IS FOR ARCHITECTURAL PURPOSES. VERIFY ACTUAL ROOM NUMBERING/LAYOUT AS REQUIRED.
6. PROVIDING AND INSTALLING THE REPLACEMENT OF ANY NEW FINISHES, DOOR ASSEMBLIES, ETC. SHALL INCLUDE THE REMOVAL AND DISPOSAL OF EXISTING AND PREPARATION FOR NEW WORK IN ANY LOCATION WHERE APPLICABLE. REFERENCE NEW WORK PLANS FOR FULL SCOPE OF WORK.
7. ALL LOOSE FURNITURE TO BE REMOVED AND REINSTALLED BY OWNER.
8. INTERIOR/EXTERIOR DIMENSIONS ARE TO THE FINISHED FACE OF INDICATED WALL.

KEY PLAN

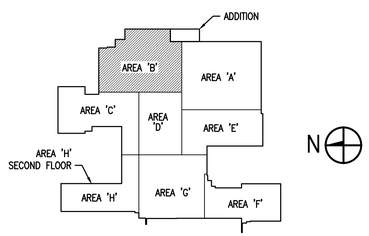

MARQUETTE OFFICE:
1021 W. BARAGA AVENUE
MARQUETTE, MI 49855
PHONE: (906)228-4400
FAX: (906)228-7524

BIRCHTON OFFICE:
5151 CLARKSTON RIVER AVE., SUITE 600
BIRCHTON, MI 48015
PHONE: (810)229-2701
FAX: (810)224-6167

ARCHITECTURE ENGINEERING CONSULTING
INTEGRATED DESIGNS INC.

HARBOR BEACH COMMUNITY SCHOOLS
PHASE 1 - 2026 ADDITION & RENOVATIONS
HARBOR BEACH, MICHIGAN
PROJECT NO. 24-138

NO.	REVISIONS	DATE
0	FOR CONSTRUCTION	8-26-26

	BY	DATE
DESIGN		
DRAWN		
CHECKED		
APPROVED		

DEMOLITION PLAN
AREA 'B'

COPYRIGHT © 2026 INTEGRATED DESIGNS INC.

A1.3

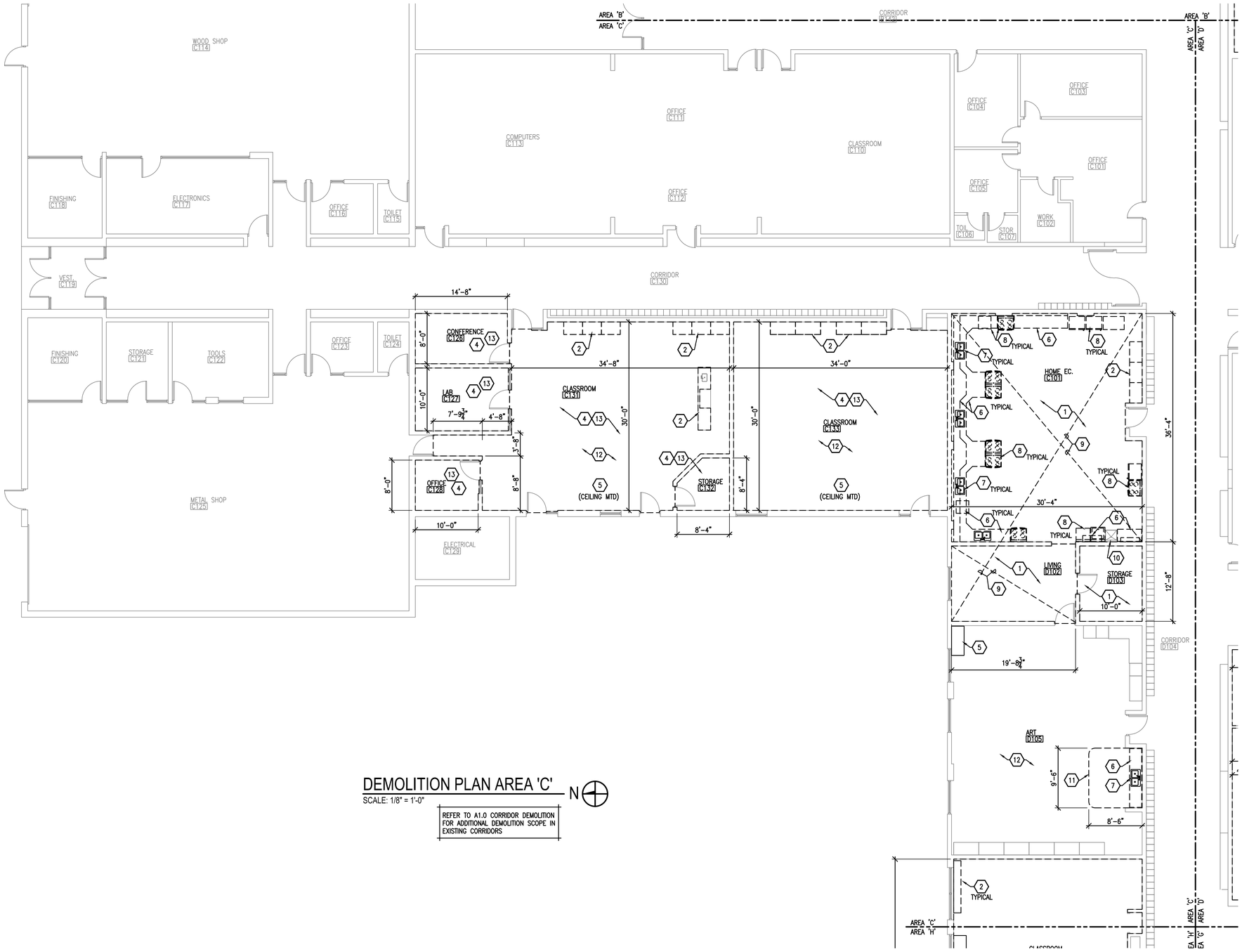

DEMOLITION PLAN AREA 'C'

SCALE: 1/8" = 1'-0"

N

REFER TO A1.0 CORRIDOR DEMOLITION FOR ADDITIONAL DEMOLITION SCOPE IN EXISTING CORRIDORS

KEYNOTES

1. REMOVE EXISTING VINYL COMPOSITION FLOOR TILE AND RESILIENT WALL BASE. REMOVE ALL ASSOCIATED ADHESIVES, ACCESSORIES, AND INCIDENTALS. PREPARE EXISTING CONCRETE FLOOR SLAB FOR NEW FLOOR FINISH.
2. EXISTING CASEWORK TO REMAIN, REMOVE EXISTING RESILIENT WALL BASE WHERE INSTALLED (FIELD VERIFY). FIELD VERIFY LOCATIONS WHERE EXISTING FLOORING RUNS UNDER CASEWORK INCLUDING, BUT NOT LIMITED TO, BOOK SHELVES, WARDROBE CABINETS, ETC. REMOVE AND SALVAGE FOR REINSTALLATION CASEWORK AS NEEDED TO ACCOMMODATE REMOVAL OF EXISTING FLOORING.
3. EXISTING MECHANICAL EQUIPMENT TO REMAIN.
4. EXISTING ASBESTOS TILE IN THIS AREA TO BE REMOVED BY OTHERS. REMOVE EXISTING RESILIENT WALL BASE. PREPARE EXISTING CONCRETE FLOOR SLAB FOR NEW FLOOR FINISH.
5. EXISTING MECHANICAL EQUIPMENT TO BE REMOVED. REFER TO MECHANICAL PLANS, COORDINATE WITH MECHANICAL CONTRACTOR
6. REMOVE EXISTING COUNTERTOP, BASE CABINETS AND WALL CABINETS IN THEIR ENTIRETY. REMOVE ALL ASSOCIATED FASTENERS AND ACCESSORIES.
7. REMOVE EXISTING SINK AND FIXTURES. COORDINATE PLUMBING REMOVAL WITH PLUMBING DRAWINGS AND PLUMBING CONTRACTOR.
8. REMOVE EXISTING APPLIANCE (OVEN, REFRIGERATOR, DISHWASHER, ETC.) SALVAGE FOR REINSTALLATION AND/OR TURN OVER TO OWNER. COORDINATE WITH NEW WORK PLAN. REMOVE EXISTING UTILITIES, REFER TO PLUMBING/ELECTRICAL PLANS.
9. REMOVE EXISTING SUSPENDED ACOUSTICAL CEILING TILES AND METAL GRID. REMOVE EXISTING PLASTER ON METAL LATH ON METAL FURRING SOFFITS (ABOVE EXISTING COUNTERTOPS) IN THEIR ENTIRETY, REMOVE ALL ASSOCIATED HANGERS, ACCESSORIES AND INCIDENTALS. REFER TO ELECTRICAL/MECHANICAL PLANS FOR ADDITIONAL CEILING EQUIPMENT REMOVAL.
10. EXISTING UTILITY SINK TO REMAIN. DISCONNECT, REMOVE, AND SALVAGE FOR REINSTALLATION AS REQUIRED TO COMPLETE NEW WORK.
11. REMOVE PORTION OF EXISTING CARPET FLOORING TO ACCOMMODATE NEW FLOORING AND SINK UNIT. PREPARE EXISTING CONCRETE SLAB FOR NEW SINK UNIT AND FLOORING. COORDINATE WITH NEW WORK PLANS.
12. REMOVE AND SALVAGE FOR REINSTALLATION EXISTING CEILING TILES AND GRID AS NEEDED TO ACCOMMODATE MECHANICAL WORK. REFER TO MECHANICAL PLANS.
13. POSSIBLE ASBESTOS LOCATED IN THIS AREA. REMOVAL PERFORMED BY OTHERS.

ASBESTOS NOTE

ASBESTOS TESTING AND SUBSEQUENT ASBESTOS ABATEMENT IS TO BE PREFORMED BY QUALIFIED ASBESTOS TESTING AND ABATEMENT CONTRACTOR AND IS THE RESPONSIBILITY OF BUILDING OWNER. NOTED LOCATIONS OF ASBESTOS IN THIS PLAN SET MAY NOT REFLECT ALL ASBESTOS REQUIRING ABATEMENT. COORDINATE WITH ABATEMENT CONTRACTOR.

GENERAL NOTES

1. EXISTING CONDITIONS SHOWN ON THESE DRAWINGS HAVE BEEN OBTAINED FROM EXISTING DRAWINGS AND FIELD INSPECTIONS. CONTRACTOR SHALL BE RESPONSIBLE TO FIELD VERIFY THE EXISTING CONDITIONS REGARDING DEMOLITION AND NEW WORK BEFORE SUBMITTING A BID FOR THE PROJECT. CONTRACTOR SHALL REPORT ANY DISCREPANCIES TO OWNER OR OWNERS REPRESENTATIVE.
2. HALF-TONE LINES INDICATE EXISTING CONDITIONS. DASHED LINES INDICATE DEMOLITION WORK. BOLD LINES INDICATE NEW WORK. REFER TO KEYNOTES FOR DESCRIPTIONS.
3. ANY EXISTING CONDITIONS TO REMAIN THAT ARE DISTURBED ARE TO BE PATCHED/REPAIRED TO MATCH EXISTING ADJACENT CONDITIONS.
4. REFER ALSO TO ELECTRICAL, MECHANICAL, STRUCTURAL, AND CIVIL DRAWINGS AS APPLICABLE FOR ADDITIONAL SCOPE OF WORK.
5. ROOM NUMBERING SYSTEM USED IN THIS CONSTRUCTION DOCUMENT IS FOR ARCHITECTURAL PURPOSES. VERIFY ACTUAL ROOM NUMBERING/LAYOUT AS REQUIRED.
6. PROVIDING AND INSTALLING THE REPLACEMENT OF ANY NEW FINISHES, DOOR ASSEMBLIES, ETC. SHALL INCLUDE THE REMOVAL AND DISPOSAL OF EXISTING AND PREPARATION FOR NEW WORK IN ANY LOCATION WHERE APPLICABLE. REFERENCE NEW WORK PLANS FOR FULL SCOPE OF WORK.
7. ALL LOOSE FURNITURE TO BE REMOVED AND REINSTALLED BY OWNER.
8. INTERIOR/EXTERIOR DIMENSIONS ARE TO THE FINISHED FACE OF INDICATED WALL.

KEY PLAN

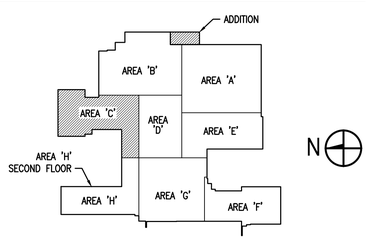

MARQUETTE OFFICE:
1021 W. BARAGA AVENUE
MARQUETTE, MI 49855
PHONE: (906)228-4483
FAX: (906)228-7524

BIRGHTON OFFICE:
5577 CLARKSTON RIVER AVE., SUITE 600
BIRGHTON, MI 48116
PHONE: (810)229-2701
FAX: (810)229-6787

ARCHITECTURE ENGINEERING CONSULTING
INTEGRATED DESIGNS INC.

HARBOR BEACH COMMUNITY SCHOOLS
PHASE 1 - 2026 ADDITION & RENOVATIONS
HARBOR BEACH, MICHIGAN

PROJECT NO. 24-138

NO.	REVISIONS	DATE
0	FOR CONSTRUCTION	8-28-26

	BY	DATE
DESIGN	-	-
DRAWN	-	-
CHECKED	-	-
APPROVED	-	-

DEMOLITION PLAN AREA 'C'

COPYRIGHT © 2026 INTEGRATED DESIGNS INC.

A1.4

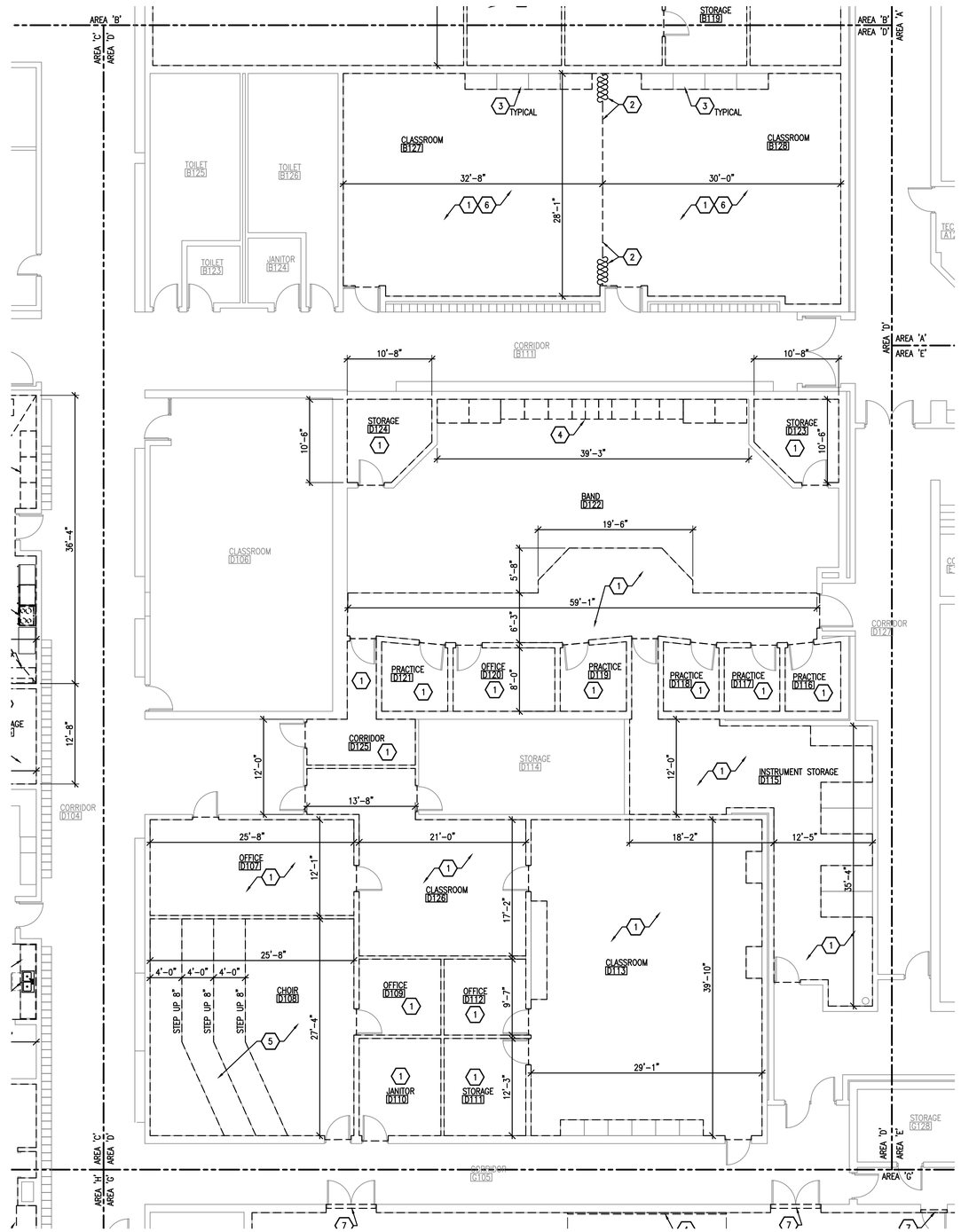

DEMOLITION PLAN AREA 'D'

SCALE: 1/8" = 1'-0"

N

REFER TO A1.0 CORRIDOR DEMOLITION FOR ADDITIONAL DEMOLITION SCOPE IN EXISTING CORRIDORS

KEYNOTES

1. REMOVE EXISTING VINYL COMPOSITION FLOOR TILE AND RESILIENT WALL BASE. REMOVE ALL ASSOCIATED ADHESIVES, ACCESSORIES, AND INCIDENTALS. PREPARE EXISTING CONCRETE FLOOR SLAB FOR NEW FLOOR FINISH.
2. REMOVE EXISTING CEILING MOUNTED DIVIDER CURTAIN. REMOVE ALL ASSOCIATED TRACK, HANGERS, INCIDENTALS AND ACCESSORIES. REMOVE AND SALVAGE CEILING TILES AS NECESSARY TO ACCOMMODATE CURTAIN REMOVAL AND REPLACEMENT.
3. EXISTING CASEWORK TO REMAIN, REMOVE EXISTING RESILIENT WALL BASE WHERE INSTALLED (FIELD VERIFY). FIELD VERIFY LOCATIONS WHERE EXISTING FLOORING RUNS UNDER CASEWORK INCLUDING, BUT NOT LIMITED TO, BOOK SHELVES, WARDROBE CABINETS, ETC. REMOVE AND SALVAGE FOR REINSTALLATION CASEWORK AS NEEDED TO ACCOMMODATE REMOVAL OF EXISTING FLOORING.
4. REMOVE EXISTING INSTRUMENT STORAGE CABINETS IN THEIR ENTIRETY. REMOVE ALL ASSOCIATED FASTENERS AND ACCESSORIES.
5. REMOVE EXISTING CARPET FLOORING AND RESILIENT WALL BASE ON LOWEST LEVEL. REMOVE ALL VINYL SHEET FLOORING ON SUBSEQUENT TIERS. REMOVE ALL WOOD TRIM AT TIER RISERS IN ITS ENTIRETY. PREPARE EXISTING SLAB AND RISERS FOR NEW CARPET FLOORING, REFER TO ROOM FINISH SCHEDULE.
6. POSSIBLE ASBESTOS LOCATED IN THIS AREA. REMOVAL PERFORMED BY OTHERS.

ASBESTOS NOTE

ASBESTOS TESTING AND SUBSEQUENT ASBESTOS ABATEMENT IS TO BE PREFORMED BY QUALIFIED ASBESTOS TESTING AND ABATEMENT CONTRACTOR AND IS THE RESPONSIBILITY OF BUILDING OWNER. NOTED LOCATIONS OF ASBESTOS IN THIS PLAN SET MAY NOT REFLECT ALL ASBESTOS REQUIRING ABATEMENT. COORDINATE WITH ABATEMENT CONTRACTOR.

GENERAL NOTES

1. EXISTING CONDITIONS SHOWN ON THESE DRAWINGS HAVE BEEN OBTAINED FROM EXISTING DRAWINGS AND FIELD INSPECTIONS. CONTRACTOR SHALL BE RESPONSIBLE TO FIELD VERIFY THE EXISTING CONDITIONS REGARDING DEMOLITION AND NEW WORK BEFORE SUBMITTING A BID FOR THE PROJECT. CONTRACTOR SHALL REPORT ANY DISCREPANCIES TO OWNER OR OWNERS REPRESENTATIVE.
2. HALF-TONE LINES INDICATE EXISTING CONDITIONS. DASHED LINES INDICATE DEMOLITION WORK. BOLD LINES INDICATE NEW WORK. REFER TO KEYNOTES FOR DESCRIPTIONS.
3. ANY EXISTING CONDITIONS TO REMAIN THAT ARE DISTURBED ARE TO BE PATCHED/REPAIRED TO MATCH EXISTING ADJACENT CONDITIONS.
4. REFER ALSO TO ELECTRICAL, MECHANICAL, STRUCTURAL, AND CIVIL DRAWINGS AS APPLICABLE FOR ADDITIONAL SCOPE OF WORK.
5. ROOM NUMBERING SYSTEM USED IN THIS CONSTRUCTION DOCUMENT IS FOR ARCHITECTURAL PURPOSES. VERIFY ACTUAL ROOM NUMBERING/LAYOUT AS REQUIRED.
6. PROVIDING AND INSTALLING THE REPLACEMENT OF ANY NEW FINISHES, DOOR ASSEMBLIES, ETC. SHALL INCLUDE THE REMOVAL AND DISPOSAL OF EXISTING AND PREPARATION FOR NEW WORK IN ANY LOCATION WHERE APPLICABLE. REFERENCE NEW WORK PLANS FOR FULL SCOPE OF WORK.
7. ALL LOOSE FURNITURE TO BE REMOVED AND REINSTALLED BY OWNER.
8. INTERIOR/EXTERIOR DIMENSIONS ARE TO THE FINISHED FACE OF INDICATED WALL.

KEY PLAN

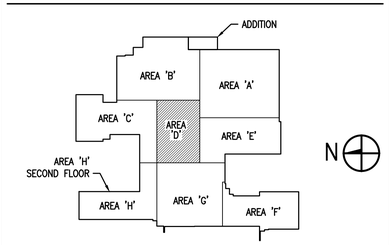

MARQUETTE OFFICE:
1021 W. BARAGA AVENUE
MARQUETTE, MI 49855
PHONE: (906)228-4483
FAX: (906)228-7524

BIRGHTON OFFICE:
601 CROSSWINDS OVER AVE., SUITE 600
BRIGHTON, MI 48116
PHONE: (810)229-2701
FAX: (810)229-4787

INTEGRATED DESIGNS INC.
ARCHITECTURE ENGINEERING CONSULTING

HARBOR BEACH COMMUNITY SCHOOLS
PHASE 1 - 2026 ADDITION & RENOVATIONS
HARBOR BEACH, MICHIGAN
PROJECT NO. 24-138

NO.	REVISIONS	DATE
0	FOR CONSTRUCTION	8-28-26

	BY	DATE
DESIGN		
DRAWN		
CHECKED		
APPROVED		

DEMOLITION PLAN
AREA 'D'

COPYRIGHT © 2026 INTEGRATED DESIGNS INC.

A1.5

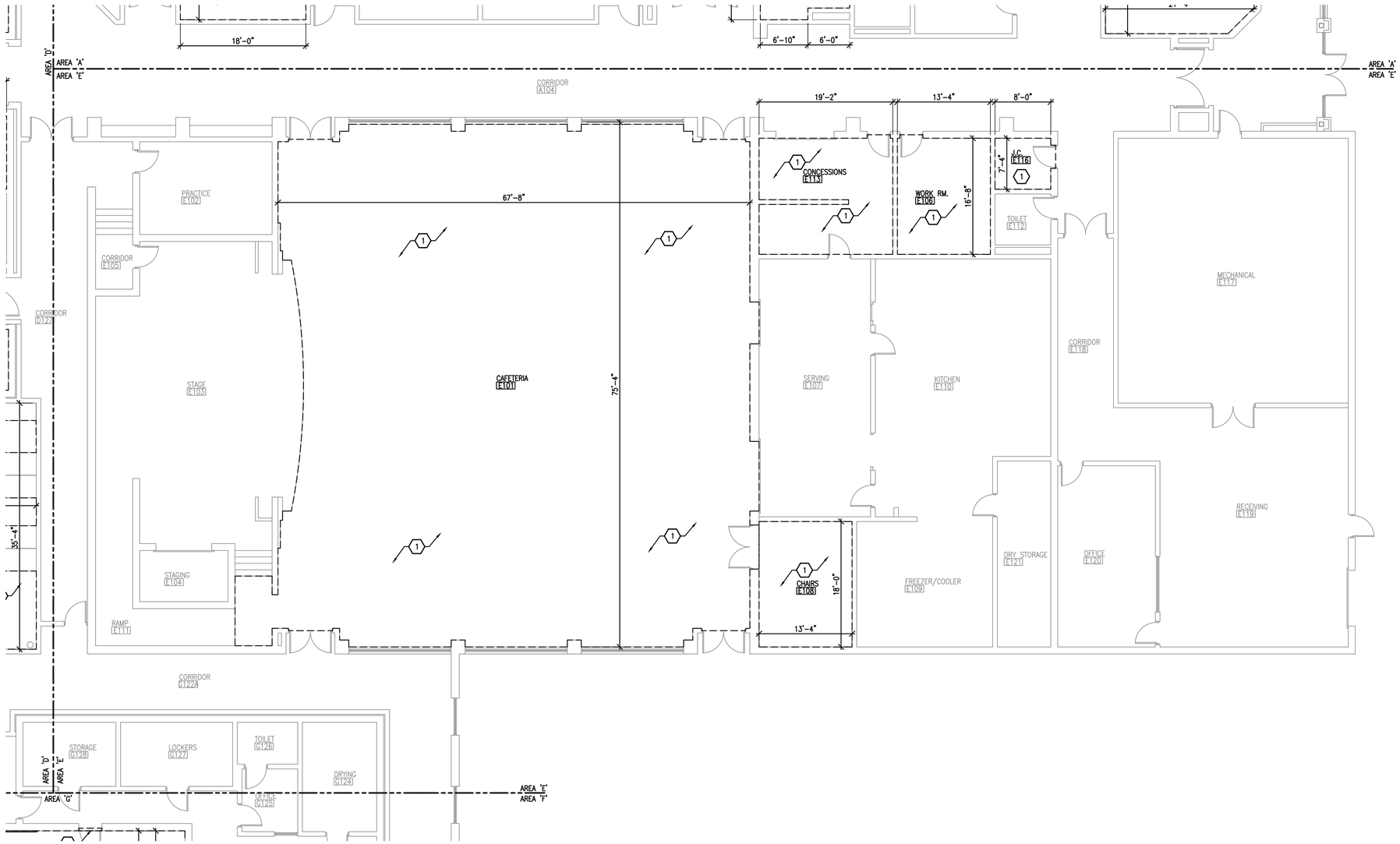

DEMOLITION PLAN AREA 'E'

SCALE: 1/8" = 1'-0"

N

REFER TO A1.0 CORRIDOR DEMOLITION FOR ADDITIONAL DEMOLITION SCOPE IN EXISTING CORRIDORS

KEYNOTES

1. REMOVE EXISTING VINYL COMPOSITION FLOOR TILE AND RESILIENT WALL BASE. REMOVE ALL ASSOCIATED ADHESIVES, ACCESSORIES, AND INCIDENTALS. PREPARE EXISTING CONCRETE FLOOR SLAB FOR NEW FLOOR FINISH.

ASBESTOS NOTE

ASBESTOS TESTING AND SUBSEQUENT ASBESTOS ABATEMENT IS TO BE PREFORMED BY QUALIFIED ASBESTOS TESTING AND ABATEMENT CONTRACTOR AND IS THE RESPONSIBILITY OF BUILDING OWNER. NOTED LOCATIONS OF ASBESTOS IN THIS PLAN SET MAY NOT REFLECT ALL ASBESTOS REQUIRING ABATEMENT. COORDINATE WITH ABATEMENT CONTRACTOR.

GENERAL NOTES

1. EXISTING CONDITIONS SHOWN ON THESE DRAWINGS HAVE BEEN OBTAINED FROM EXISTING DRAWINGS AND FIELD INSPECTIONS. CONTRACTOR SHALL BE RESPONSIBLE TO FIELD VERIFY THE EXISTING CONDITIONS REGARDING DEMOLITION AND NEW WORK BEFORE SUBMITTING A BID FOR THE PROJECT. CONTRACTOR SHALL REPORT ANY DISCREPANCIES TO OWNER OR OWNERS REPRESENTATIVE.
2. HALF-TONE LINES INDICATE EXISTING CONDITIONS. DASHED LINES INDICATE DEMOLITION WORK. BOLD LINES INDICATE NEW WORK. REFER TO KEYNOTES FOR DESCRIPTIONS.
3. ANY EXISTING CONDITIONS TO REMAIN THAT ARE DISTURBED ARE TO BE PATCHED/REPAIRED TO MATCH EXISTING ADJACENT CONDITIONS.
4. REFER ALSO TO ELECTRICAL, MECHANICAL, STRUCTURAL, AND CIVIL DRAWINGS AS APPLICABLE FOR ADDITIONAL SCOPE OF WORK.
5. ROOM NUMBERING SYSTEM USED IN THIS CONSTRUCTION DOCUMENT IS FOR ARCHITECTURAL PURPOSES. VERIFY ACTUAL ROOM NUMBERING/LAYOUT AS REQUIRED.
6. PROVIDING AND INSTALLING THE REPLACEMENT OF ANY NEW FINISHES, DOOR ASSEMBLIES, ETC. SHALL INCLUDE THE REMOVAL AND DISPOSAL OF EXISTING AND PREPARATION FOR NEW WORK IN ANY LOCATION WHERE APPLICABLE. REFERENCE NEW WORK PLANS FOR FULL SCOPE OF WORK.
7. ALL LOOSE FURNITURE TO BE REMOVED AND REINSTALLED BY OWNER.
8. INTERIOR/EXTERIOR DIMENSIONS ARE TO THE FINISHED FACE OF INDICATED WALL.

KEY PLAN

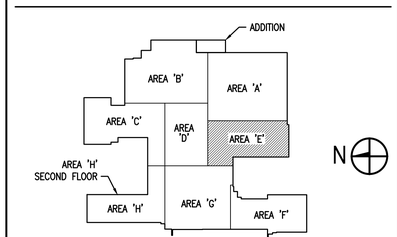

INTEGRATED DESIGNS INC.
ARCHITECTURE ENGINEERING CONSULTING
MARQUETTE OFFICE:
1021 W. BARAGA AVENUE
MARQUETTE, MI 49855
PHONE: (906)228-4449
FAX: (906)228-7524
BIRGHTON OFFICE:
6527 GRAND RIVER AVE., SUITE 600
BRIGHTON, MI 48116
PHONE: (810)229-2701
FAX: (810)229-6787

HARBOR BEACH COMMUNITY SCHOOLS
PHASE 1 - 2026 ADDITION & RENOVATIONS
HARBOR BEACH, MICHIGAN
PROJECT NO. 24-138

NO.	REVISIONS	DATE
0	FOR CONSTRUCTION	8-28-26

	BY	DATE
DESIGN		
DRAWN		
CHECKED		
APPROVED		

DEMOLITION PLAN
AREA 'E'

COPYRIGHT © 2026 INTEGRATED DESIGNS INC.

A1.6

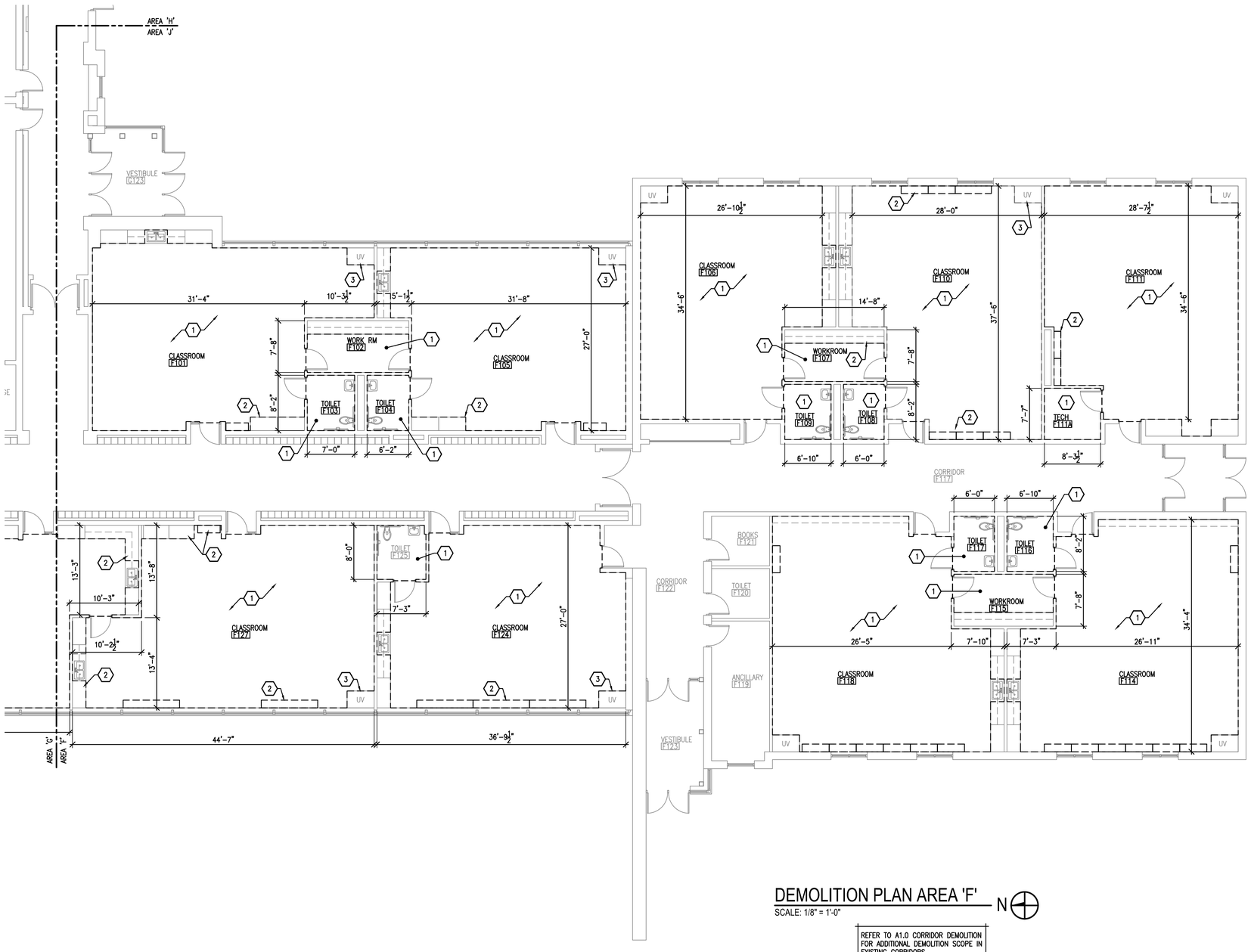

DEMOLITION PLAN AREA 'F'

SCALE: 1/8" = 1'-0"

REFER TO A1.0 CORRIDOR DEMOLITION FOR ADDITIONAL DEMOLITION SCOPE IN EXISTING CORRIDORS

KEYNOTES

1. REMOVE EXISTING VINYL COMPOSITION FLOOR TILE AND RESILIENT WALL BASE. REMOVE ALL ASSOCIATED ADHESIVES, ACCESSORIES, AND INCIDENTALS. PREPARE EXISTING CONCRETE FLOOR SLAB FOR NEW FLOOR FINISH.
2. EXISTING CASEWORK TO REMAIN, REMOVE EXISTING RESILIENT WALL BASE WHERE INSTALLED (FIELD VERIFY). FIELD VERIFY LOCATIONS WHERE EXISTING FLOORING RUNS UNDER CASEWORK INCLUDING, BUT NOT LIMITED TO, BOOK SHELVES, WARDROBE CABINETS, ETC. REMOVE AND SALVAGE FOR REINSTALLATION CASEWORK AS NEEDED TO ACCOMMODATE REMOVAL OF EXISTING FLOORING.
3. EXISTING MECHANICAL EQUIPMENT TO REMAIN.

ASBESTOS NOTE

ASBESTOS TESTING AND SUBSEQUENT ASBESTOS ABATEMENT IS TO BE PREFORMED BY QUALIFIED ASBESTOS TESTING AND ABATEMENT CONTRACTOR AND IS THE RESPONSIBILITY OF BUILDING OWNER. NOTED LOCATIONS OF ASBESTOS IN THIS PLAN SET MAY NOT REFLECT ALL ASBESTOS REQUIRING ABATEMENT. COORDINATE WITH ABATEMENT CONTRACTOR.

GENERAL NOTES

1. EXISTING CONDITIONS SHOWN ON THESE DRAWINGS HAVE BEEN OBTAINED FROM EXISTING DRAWINGS AND FIELD INSPECTIONS. CONTRACTOR SHALL BE RESPONSIBLE TO FIELD VERIFY THE EXISTING CONDITIONS REGARDING DEMOLITION AND NEW WORK BEFORE SUBMITTING A BID FOR THE PROJECT. CONTRACTOR SHALL REPORT ANY DISCREPANCIES TO OWNER OR OWNERS REPRESENTATIVE.
2. HALF-TONE LINES INDICATE EXISTING CONDITIONS. DASHED LINES INDICATE DEMOLITION WORK. BOLD LINES INDICATE NEW WORK. REFER TO KEYNOTES FOR DESCRIPTIONS.
3. ANY EXISTING CONDITIONS TO REMAIN THAT ARE DISTURBED ARE TO BE PATCHED/REPAIRED TO MATCH EXISTING ADJACENT CONDITIONS.
4. REFER ALSO TO ELECTRICAL, MECHANICAL, STRUCTURAL, AND CIVIL DRAWINGS AS APPLICABLE FOR ADDITIONAL SCOPE OF WORK.
5. ROOM NUMBERING SYSTEM USED IN THIS CONSTRUCTION DOCUMENT IS FOR ARCHITECTURAL PURPOSES. VERIFY ACTUAL ROOM NUMBERING/LAYOUT AS REQUIRED.
6. PROVIDING AND INSTALLING THE REPLACEMENT OF ANY NEW FINISHES, DOOR ASSEMBLIES, ETC. SHALL INCLUDE THE REMOVAL AND DISPOSAL OF EXISTING AND PREPARATION FOR NEW WORK IN ANY LOCATION WHERE APPLICABLE. REFERENCE NEW WORK PLANS FOR FULL SCOPE OF WORK.
7. ALL LOOSE FURNITURE TO BE REMOVED AND REINSTALLED BY OWNER.
8. INTERIOR/EXTERIOR DIMENSIONS ARE TO THE FINISHED FACE OF INDICATED WALL.

KEY PLAN

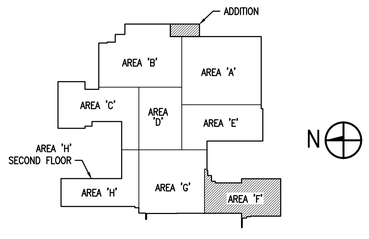

INTEGRATED DESIGNS INC.
ARCHITECTURE ENGINEERING CONSULTING
MARQUETTE OFFICE:
1021 W. BARAGA AVENUE
MARQUETTE, MI 49855
PHONE: (906)228-4483
FAX: (906)228-7524
BIRGHTON OFFICE:
5711 GRAND RIVER AVE., SUITE 600
BRIGHTON, MI 48116
PHONE: (810)229-2701
FAX: (810)229-6787

HARBOR BEACH COMMUNITY SCHOOLS
PHASE 1 - 2026 ADDITION & RENOVATIONS
HARBOR BEACH, MICHIGAN
PROJECT NO. 24-138

NO.	REVISIONS	DATE
0	FOR CONSTRUCTION	8-28-26

	BY	DATE
DESIGN		
DRAWN		
CHECKED		
APPROVED		

DEMOLITION PLAN
AREA 'F'

COPYRIGHT © 2026 INTEGRATED DESIGNS INC.

A1.7

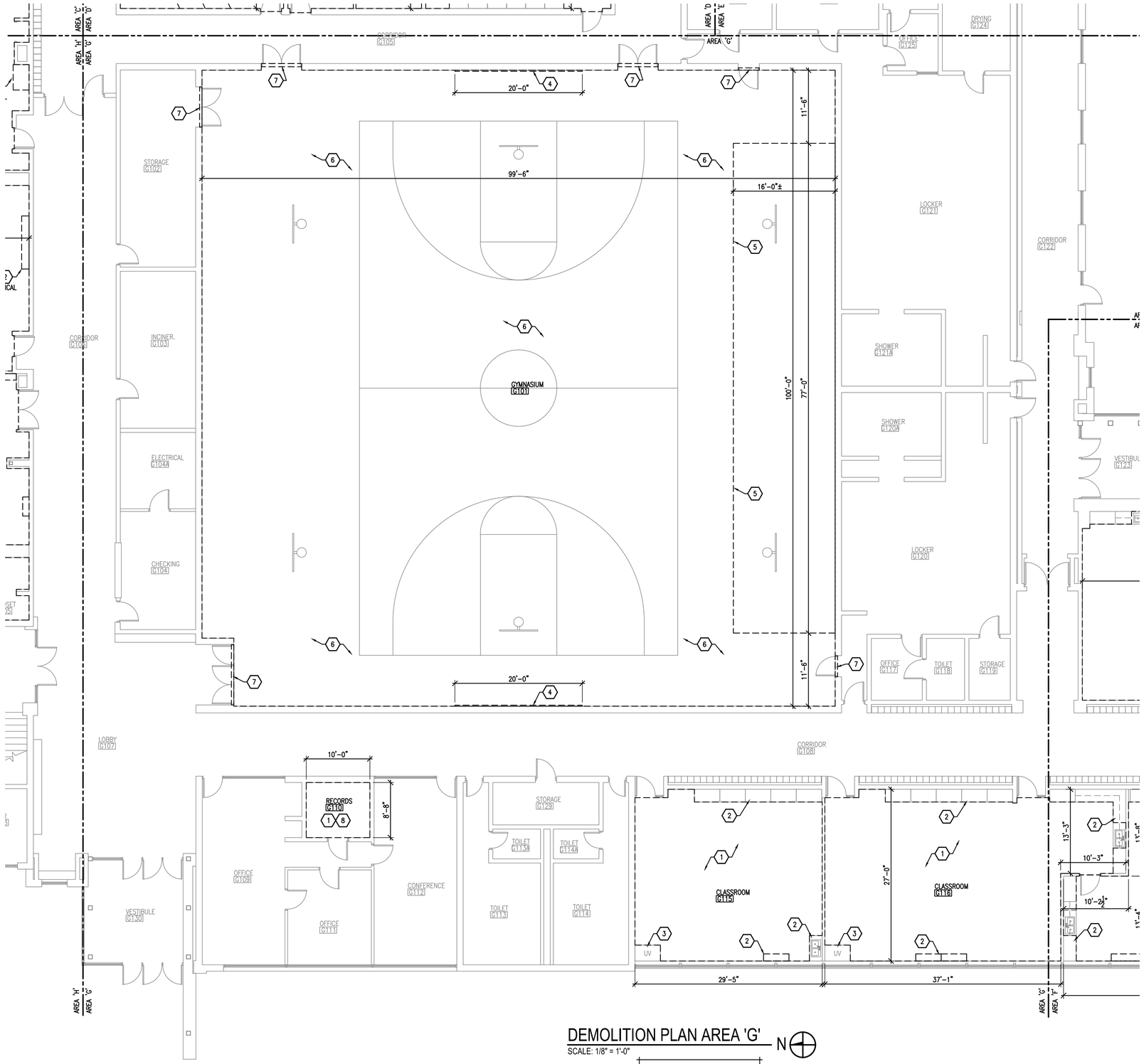

DEMOLITION PLAN AREA 'G'

SCALE: 1/8" = 1'-0"

N

REFER TO A1.0 CORRIDOR DEMOLITION FOR ADDITIONAL DEMOLITION SCOPE IN EXISTING CORRIDORS

KEYNOTES

1. REMOVE EXISTING VINYL COMPOSITION FLOOR TILE AND RESILIENT WALL BASE. REMOVE ALL ASSOCIATED ADHESIVES, ACCESSORIES, AND INCIDENTALS. PREPARE EXISTING CONCRETE FLOOR SLAB FOR NEW FLOOR FINISH.
2. EXISTING CASEWORK TO REMAIN, REMOVE EXISTING RESILIENT WALL BASE WHERE INSTALLED (FIELD VERIFY). FIELD VERIFY LOCATIONS WHERE EXISTING FLOORING RUNS UNDER CASEWORK INCLUDING, BUT NOT LIMITED TO, BOOK SHELVES, WARDROBE CABINETS, ETC. REMOVE AND SALVAGE FOR REINSTALLATION CASEWORK AS NEEDED TO ACCOMMODATE REMOVAL OF EXISTING FLOORING.
3. EXISTING MECHANICAL EQUIPMENT TO REMAIN.
4. REMOVE EXISTING WALL PADDING. REMOVE ALL ASSOCIATED FASTENERS AND ACCESSORIES.
5. REMOVE EXISTING BLEACHERS IN THEIR ENTIRETY. REMOVE ALL ASSOCIATED ACCESSORIES AND INCIDENTALS.
6. EXISTING WOOD GYMNASIUM FLOOR TO REMAIN SAND AND PREPARE FOR NEW FINISH.
7. REMOVE EXISTING METAL THRESHOLD. SALVAGE FOR REINSTALLATION WHEN FLOOR FINISHING IS COMPLETE.
8. POSSIBLE ASBESTOS LOCATED IN THIS AREA. REMOVAL PERFORMED BY OTHERS.

ASBESTOS NOTE

ASBESTOS TESTING AND SUBSEQUENT ASBESTOS ABATEMENT IS TO BE PREFORMED BY QUALIFIED ASBESTOS TESTING AND ABATEMENT CONTRACTOR AND IS THE RESPONSIBILITY OF BUILDING OWNER. NOTED LOCATIONS OF ASBESTOS IN THIS PLAN SET MAY NOT REFLECT ALL ASBESTOS REQUIRING ABATEMENT. COORDINATE WITH ABATEMENT CONTRACTOR.

GENERAL NOTES

1. EXISTING CONDITIONS SHOWN ON THESE DRAWINGS HAVE BEEN OBTAINED FROM EXISTING DRAWINGS AND FIELD INSPECTIONS. CONTRACTOR SHALL BE RESPONSIBLE TO FIELD VERIFY THE EXISTING CONDITIONS REGARDING DEMOLITION AND NEW WORK BEFORE SUBMITTING A BID FOR THE PROJECT. CONTRACTOR SHALL REPORT ANY DISCREPANCIES TO OWNER OR OWNERS REPRESENTATIVE.
2. HALF-TONE LINES INDICATE EXISTING CONDITIONS. DASHED LINES INDICATE DEMOLITION WORK. BOLD LINES INDICATE NEW WORK. REFER TO KEYNOTES FOR DESCRIPTIONS.
3. ANY EXISTING CONDITIONS TO REMAIN THAT ARE DISTURBED ARE TO BE PATCHED/REPAIRED TO MATCH EXISTING ADJACENT CONDITIONS.
4. REFER ALSO TO ELECTRICAL, MECHANICAL, STRUCTURAL, AND CIVIL DRAWINGS AS APPLICABLE FOR ADDITIONAL SCOPE OF WORK.
5. ROOM NUMBERING SYSTEM USED IN THIS CONSTRUCTION DOCUMENT IS FOR ARCHITECTURAL PURPOSES. VERIFY ACTUAL ROOM NUMBERING/LAYOUT AS REQUIRED.
6. PROVIDING AND INSTALLING THE REPLACEMENT OF ANY NEW FINISHES, DOOR ASSEMBLIES, ETC. SHALL INCLUDE THE REMOVAL AND DISPOSAL OF EXISTING AND PREPARATION FOR NEW WORK IN ANY LOCATION WHERE APPLICABLE. REFERENCE NEW WORK PLANS FOR FULL SCOPE OF WORK.
7. ALL LOOSE FURNITURE TO BE REMOVED AND REINSTALLED BY OWNER.
8. INTERIOR/EXTERIOR DIMENSIONS ARE TO THE FINISHED FACE OF INDICATED WALL.

KEY PLAN

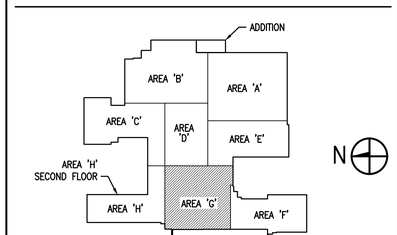

MARQUETTE OFFICE:
1021 W. BARAGA AVENUE
MARQUETTE, MI 49855
PHONE: (906)228-4403
FAX: (906)228-7524

BRIGHTON OFFICE:
201 E. GRAND RIVER AVE., SUITE 600
BRIGHTON, MI 48116
PHONE: (810)229-2701
FAX: (810)229-6787

INTEGRATED DESIGNS INC.
ARCHITECTURE ENGINEERING CONSULTING

HARBOR BEACH COMMUNITY SCHOOLS
PHASE 1 - 2026 ADDITION & RENOVATIONS
HARBOR BEACH, MICHIGAN
PROJECT NO. 24-138

NO.	REVISIONS	DATE
0	FOR CONSTRUCTION	8-28-26

	BY	DATE
DESIGN	-	-
DRAWN	-	-
CHECKED	-	-
APPROVED	-	-

DEMOLITION PLAN
AREA 'G'

COPYRIGHT © 2026 INTEGRATED DESIGNS INC.

A1.8

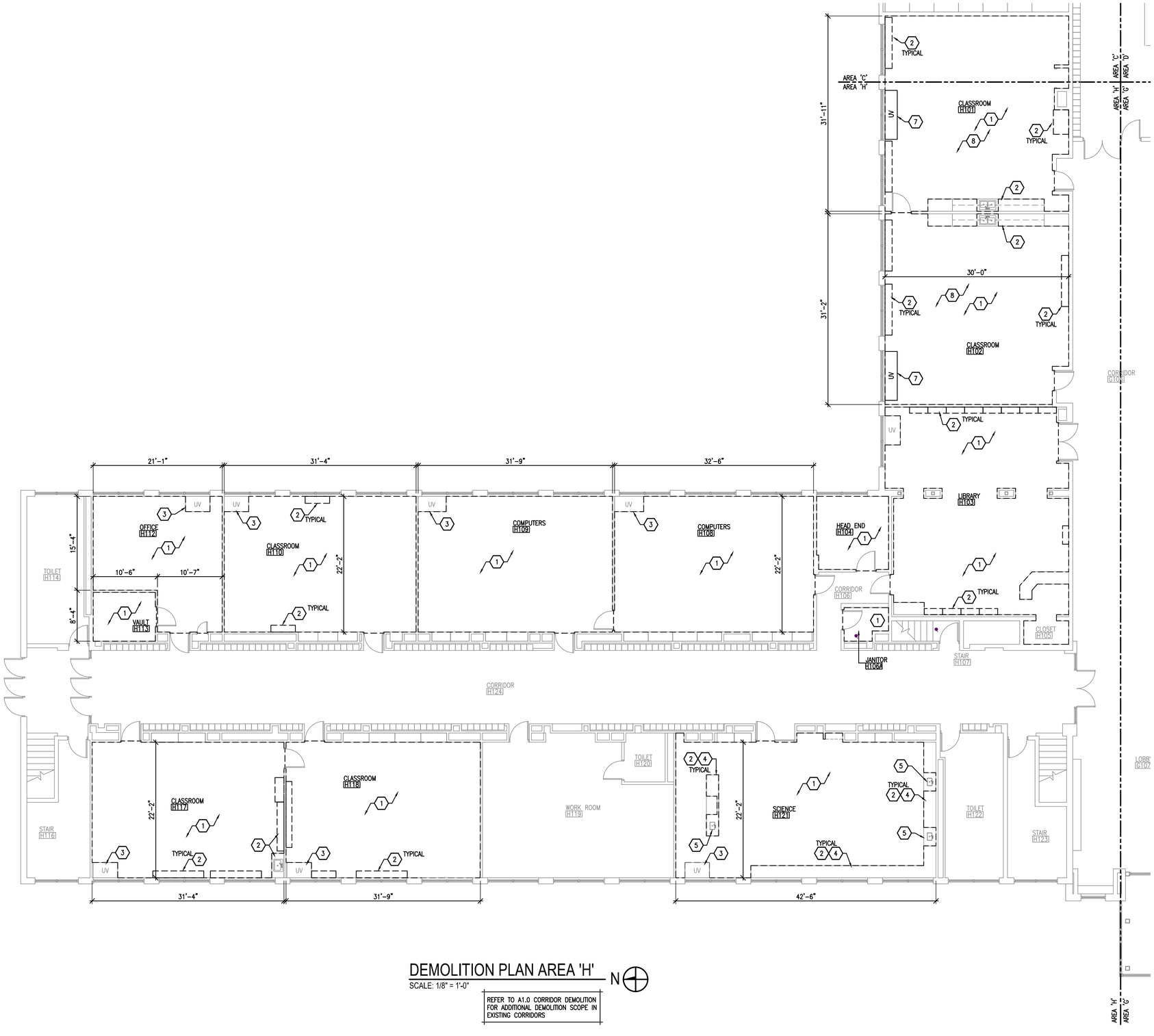

DEMOLITION PLAN AREA 'H'

SCALE: 1/8" = 1'-0"

N

REFER TO A1.0 CORRIDOR DEMOLITION FOR ADDITIONAL DEMOLITION SCOPE IN EXISTING CORRIDORS

KEYNOTES

1. REMOVE EXISTING VINYL COMPOSITION FLOOR TILE AND RESILIENT WALL BASE. REMOVE ALL ASSOCIATED ADHESIVES, ACCESSORIES, AND INCIDENTALS. PREPARE EXISTING CONCRETE FLOOR SLAB FOR NEW FLOOR FINISH.
2. EXISTING CASEWORK TO REMAIN, REMOVE EXISTING RESILIENT WALL BASE WHERE INSTALLED (FIELD VERIFY). FIELD VERIFY LOCATIONS WHERE EXISTING FLOORING RUNS UNDER CASEWORK INCLUDING, BUT NOT LIMITED TO, BOOK SHELVES, WARDROBE CABINETS, ETC. REMOVE AND SALVAGE FOR REINSTALLATION CASEWORK AS NEEDED TO ACCOMMODATE REMOVAL OF EXISTING FLOORING.
3. EXISTING MECHANICAL EQUIPMENT TO REMAIN.
4. EXISTING SCIENCE GRADE EPOXY COUNTERTOPS TO REMAIN AND BE RE-FINISHED. SAND SMOOTH AND REPAIR AND DAMAGE AND/OR DEEP SCRATCHES. RE-FINISH PER COUNTERTOP MANUFACTURERS RECOMMENDATIONS – FLOOD COAT WITH NEW EPOXY AND/OR POLISH EXISTING TO RESTORE TO AS NEW CONDITION. APPROXIMATELY 150 S.F. OF EXISTING COUNTERTOP
5. EXISTING INTEGRAL SINKS TO REMAIN, REMOVE EXISTING FAUCET FIXTURE, REFER TO PLUMBING.
6. NO WORK TO BE PERFORMED IN EXISTING VAULT.
7. EXISTING MECHANICAL EQUIPMENT TO BE REMOVED. REFER TO MECHANICAL PLANS, COORDINATE WITH MECHANICAL CONTRACTOR. PATCH AND REPAIR CONCRETE FLOORING AS NEEDED TO ACCOMMODATE MECHANICAL EQUIPMENT MODIFICATIONS, FIELD VERIFY EXTENTS, PREPARE SLAB FOR NEW FLOOR FINISHES.
8. REMOVE AND SALVAGE FOR REINSTALLATION EXISTING CEILING TILES AND GRID AS NEEDED TO ACCOMMODATE MECHANICAL WORK. REFER TO MECHANICAL PLANS.

ASBESTOS NOTE

ASBESTOS TESTING AND SUBSEQUENT ASBESTOS ABATEMENT IS TO BE PREFORMED BY QUALIFIED ASBESTOS TESTING AND ABATEMENT CONTRACTOR AND IS THE RESPONSIBILITY OF BUILDING OWNER. NOTED LOCATIONS OF ASBESTOS IN THIS PLAN SET MAY NOT REFLECT ALL ASBESTOS REQUIRING ABATEMENT. COORDINATE WITH ABATEMENT CONTRACTOR.

GENERAL NOTES

1. EXISTING CONDITIONS SHOWN ON THESE DRAWINGS HAVE BEEN OBTAINED FROM EXISTING DRAWINGS AND FIELD INSPECTIONS. CONTRACTOR SHALL BE RESPONSIBLE TO FIELD VERIFY THE EXISTING CONDITIONS REGARDING DEMOLITION AND NEW WORK BEFORE SUBMITTING A BID FOR THE PROJECT. CONTRACTOR SHALL REPORT ANY DISCREPANCIES TO OWNER OR OWNERS REPRESENTATIVE.
2. HALF-TONE LINES INDICATE EXISTING CONDITIONS. DASHED LINES INDICATE DEMOLITION WORK. BOLD LINES INDICATE NEW WORK. REFER TO KEYNOTES FOR DESCRIPTIONS.
3. ANY EXISTING CONDITIONS TO REMAIN THAT ARE DISTURBED ARE TO BE PATCHED/REPAIRED TO MATCH EXISTING ADJACENT CONDITIONS.
4. REFER ALSO TO ELECTRICAL, MECHANICAL, STRUCTURAL, AND CIVIL DRAWINGS AS APPLICABLE FOR ADDITIONAL SCOPE OF WORK.
5. ROOM NUMBERING SYSTEM USED IN THIS CONSTRUCTION DOCUMENT IS FOR ARCHITECTURAL PURPOSES. VERIFY ACTUAL ROOM NUMBERING/LAYOUT AS REQUIRED.
6. PROVIDING AND INSTALLING THE REPLACEMENT OF ANY NEW FINISHES, DOOR ASSEMBLIES, ETC. SHALL INCLUDE THE REMOVAL AND DISPOSAL OF EXISTING AND PREPARATION FOR NEW WORK IN ANY LOCATION WHERE APPLICABLE. REFERENCE NEW WORK PLANS FOR FULL SCOPE OF WORK.
7. ALL LOOSE FURNITURE TO BE REMOVED AND REINSTALLED BY OWNER.
8. INTERIOR/EXTERIOR DIMENSIONS ARE TO THE FINISHED FACE OF INDICATED WALL.

KEY PLAN

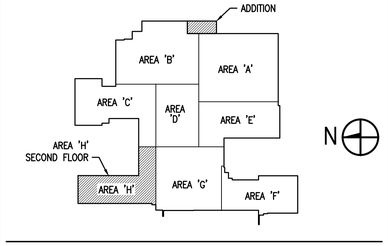

MARQUETTE OFFICE:
1021 W. BARAGA AVENUE
MARQUETTE, MI 49855
PHONE: (906)228-4483
FAX: (906)228-7524

BRIGHTON OFFICE:
9111 GRAND RIVER AVE., SUITE 600
BRIGHTON, MI 48116
PHONE: (810)229-2701
FAX: (810)229-4787

INTEGRATED DESIGNS INC.
ARCHITECTURE ENGINEERING CONSULTING

HARBOR BEACH COMMUNITY SCHOOLS
PHASE 1 - 2026 ADDITION & RENOVATIONS
HARBOR BEACH, MICHIGAN
PROJECT NO. 24-138

NO.	REVISIONS	DATE
0	FOR CONSTRUCTION	8-28-26

	BY	DATE
DESIGN		
DRAWN		
CHECKED		
APPROVED		

DEMOLITION PLAN
AREA 'H'

COPYRIGHT © 2026 INTEGRATED DESIGNS INC.

A1.9

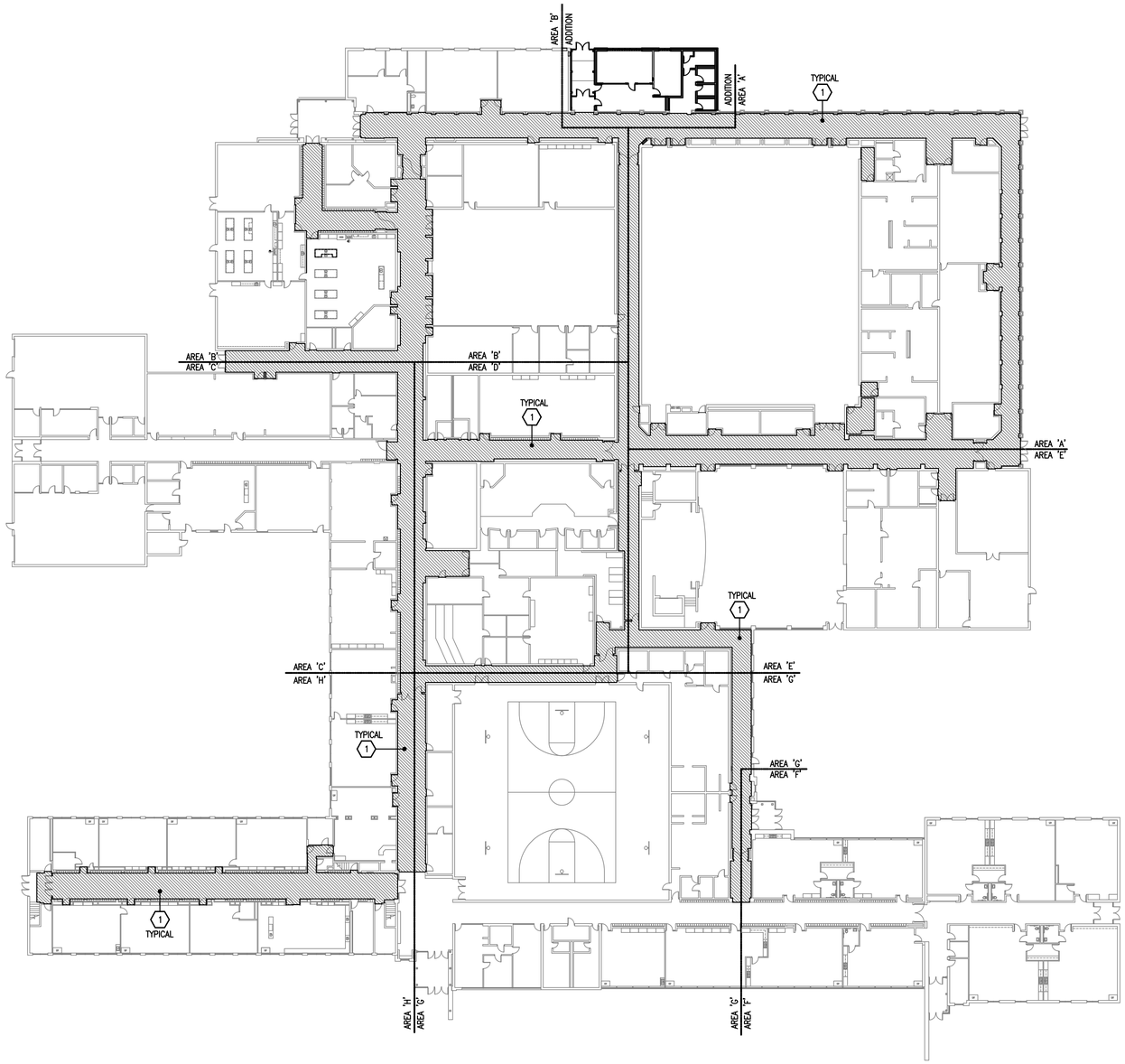

CORRIDOR PLAN - FIRST FLOOR

SCALE: 1" = 30'-0"

N

REFER TO SUBSEQUENT A2 SERIES SHEETS FOR ADDITIONAL WORK SCOPE

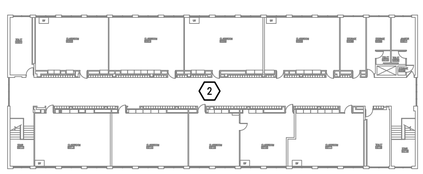

SECOND FLOOR

SCALE: 1" = 30'-0"

N

KEYNOTES

1. PATCH AND REPAIR EXISTING CONCRETE SLAB AS NEEDED, CLEAN SLAB AND INSTALL NEW LUXURY VINYL TILE (LVT) FLOORING. INSTALL RESILIENT WALL BASE IN LOCATIONS WHERE PREVIOUSLY REMOVED. REFER TO FLOORING FINISH PLAN SHEET A7.2 APPROXIMATE CORRIDOR FLOORING REMOVAL AND REPLACEMENT 21,850 S.F.
2. NO WORK ON SECOND FLOOR

KEY PLAN

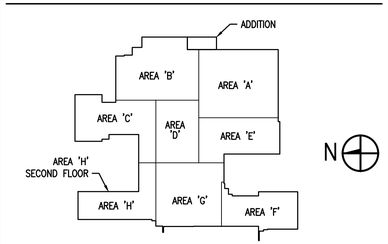

INTEGRATED DESIGNS INC.
ARCHITECTURE
ENGINEERING
CONSULTING
MARQUETTE OFFICE:
1021 W. BARAGA AVENUE
MARQUETTE, MI 49855
PHONE: (906)228-4449
FAX: (906)228-7324
BIRGHTON OFFICE:
5577 GRAND RIVER AVE., SUITE 600
BRIGHTON, MI 48116
PHONE: (810)229-2701
FAX: (810)229-6167

HARBOR BEACH COMMUNITY SCHOOLS
PHASE 1 - 2026 ADDITION & RENOVATIONS
HARBOR BEACH, MICHIGAN
PROJECT NO. 24-138

	BY	DATE
DESIGN	--	--
DRAWN	--	--
CHECKED	--	--
APPROVED	--	--

NO.	REVISIONS	DATE
0	FOR CONSTRUCTION	8-28-26

COMPOSITE PLAN

COPYRIGHT © 2026 INTEGRATED DESIGNS INC.

A2.0

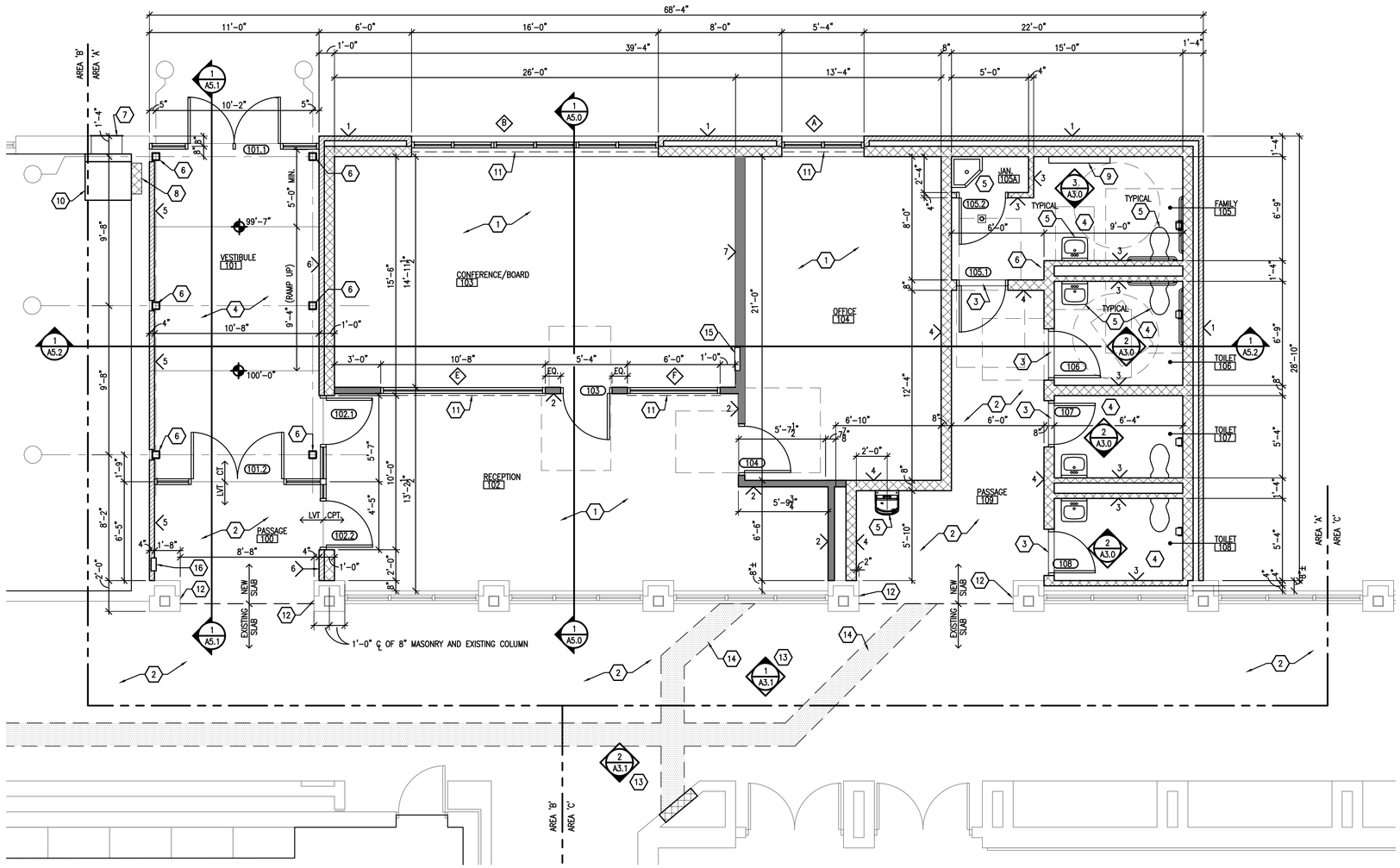

FLOOR PLAN - ADDITION

SCALE: 1/4" = 1'-0"

REFER TO A2.0 CORRIDOR PLAN FOR ADDITIONAL SCOPE IN EXISTING CORRIDORS

N

KEYNOTES

1. INSTALL NEW CARPET FLOORING AND VINYL BASE. REFER TO ROOM FINISH SCHEDULE.
2. INSTALL NEW LVT FLOORING AND VINYL BASE. REFER TO ROOM FINISH SCHEDULE A7.0 AND FLOOR FINISH PLAN A7.1.
3. ENGINEERED STONE DOOR THRESHOLD, REFER TO SPECIFICATIONS.
4. INSTALL NEW TILE FLOORING AND BASE. REFER TO ROOM FINISH SCHEDULE.
5. NEW PLUMING FIXTURE AS SPECIFIED. REFER TO PLUMBING PLANS, ARCHITECTURAL ELEVATIONS AND REFER TO ADA MOUNTING HEIGHT DETAILS FOR PLACEMENT REQUIREMENTS. TYPICAL.
6. 6x6 STEEL COLUMN, REFER TO FRAMING PLAN. PAINT FINISH.
7. NEW MASONRY OPENING, LINTEL, AND MECHANICAL LOUVER. COORDINATE SIZE AND LOCATION WITH MECHANICAL CONTRACTOR.
8. INFILL EXISTING MASONRY OPENING WITH 8" CONCRETE MASONRY WHERE MECHANICAL PENETRATION ABANDONED. TOOTH NEW MASONRY INTO EXISTING, PAINT FINISH. FIELD VERIFY EXACT SIZE AND LOCATION.
9. BABY CHANGING STATION, REFER TO SPECIFICATIONS.
10. MODIFIED MECHANICAL EQUIPMENT, REFER TO MECHANICAL PLANS.
11. ROLLER SHADE(S) AT WINDOW, REFER TO SPECIFICATIONS.
12. PATCH AND REPAIR MASONRY PIER WHERE SHORT WALL, WINDOW, AND/OR ENTRY SYSTEM PREVIOUSLY REMOVED. PATCH WITH LIKE MATERIALS, FIELD VERIFY EXTENTS.
13. REFER TO INTERIOR ELEVATIONS AND CEILING PLAN FOR WALL TREATMENTS ABOVE.
14. HATCHED AREA INDICATES PATCH AND REPAIR CONCRETE SLAB AS NEEDED WHERE PREVIOUSLY REMOVED FOR PLUMBING WORK. COORDINATE LOCATION AND EXTENTS WITH PLUMBING CONTRACTOR. PATCH TO BE FLUSH AND LEVEL WITH AND MATCH EXISTING ADJACENT SLAB THICKNESS OVER VAPOR BARRIER. DRILL AND DOWEL NEW PATCH INTO EXISTING ADJACENT SLAB WITH 8" DOWELS AT 24" O.C, SET INTO EXISTING SLAB WITH EPOXY GROUT.
15. ELECTRICAL PANEL, REFER TO ELECTRICAL PLANS.
16. FIRE EXTINGUISHER AND CABINET, REFER TO SPECIFICATIONS.

WALL TYPES

1. 8" REINFORCED CONCRETE MASONRY, 3" SPRAY FOAM INSULATION, AIR GAP, 4" MASONRY VENEER. PAINT FINISH INTERIOR EXPOSED SURFACES.
2. 5/8" GYPSUM BOARD ON EACH SIDE OF 3-5/8" METAL STUDS AT 16" O.C. FILL STUD CAVITIES WITH SOUND BAT INSULATION. EXTEND FROM CONCRETE SLAB TO ROOF DECK ABOVE. TAPE, SAND SMOOTH, PAINT FINISH.
3. 4" REINFORCED CONCRETE MASONRY. EXTEND FROM CONCRETE SLAB TO MINIMUM OF 4" ABOVE FINISHED CEILING. PAINT FINISH EXPOSED SURFACES.
4. 8" REINFORCED CONCRETE MASONRY. EXTEND FROM CONCRETE SLAB TO UNDERSIDE OF METAL ROOF DECK. PAINT FINISH EXPOSED SURFACES.
5. 4" FACE BRICK WITH BURNISHED BLOCK ACCENT BANDS TO 8'-8" A.F.F. 5/8" GYPSUM BOARD ON EXPOSED SIDE OF 3-5/8" METAL STUDS AT 16" O.C. FROM TOP OF MASONRY TO CEILING ABOVE. REFER TO BUILDING AND WALL SECTIONS.
6. 4" FACE BRICK WITH BURNISHED BLOCK ACCENT BANDS ON 8" REINFORCED CONCRETE MASONRY UNIT TO 8'-8" A.F.F. 5/8" GYPSUM BOARD ON EXPOSED SIDE OF 3-5/8" METAL STUDS ON 8" CONCRETE MASONRY TO CEILING ABOVE. REFER TO BUILDING AND WALL SECTIONS.
7. 5/8" GYPSUM BOARD ON EACH SIDE 6" METAL STUDS AT 16" O.C. FILL STUD CAVITIES WITH SOUND BAT INSULATION. EXTEND FROM CONCRETE SLAB TO ROOF DECK ABOVE. TAPE, SAND SMOOTH, PAINT FINISH.

KEY PLAN

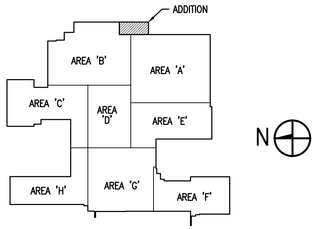

INTEGRATED DESIGNS INC.
ARCHITECTURE ENGINEERING CONSULTING

MARQUETTE OFFICE:
1021 W. BARAGA AVENUE
MARQUETTE, MI 49855
PHONE: (906)228-4449
FAX: (906)228-7524

BIRGHTON OFFICE:
5151 CLARKSTON RIVER AVE., SUITE 600
BIRGHTON, MI 48116
PHONE: (810)229-2701
FAX: (810)229-6787

HARBOR BEACH COMMUNITY SCHOOLS
PHASE 1 - 2026 ADDITION & RENOVATIONS
HARBOR BEACH, MICHIGAN

PROJECT NO. 24-138

NO.	REVISIONS	DATE
0	FOR CONSTRUCTION	8-28-26

	BY	DATE
DESIGN	- - -	- - -
DRAWN	- - -	- - -
CHECKED	- - -	- - -
APPROVED	- - -	- - -

FLOOR PLAN & CEILING PLAN ADDITION

COPYRIGHT © 2026 INTEGRATED DESIGNS INC.

A2.1

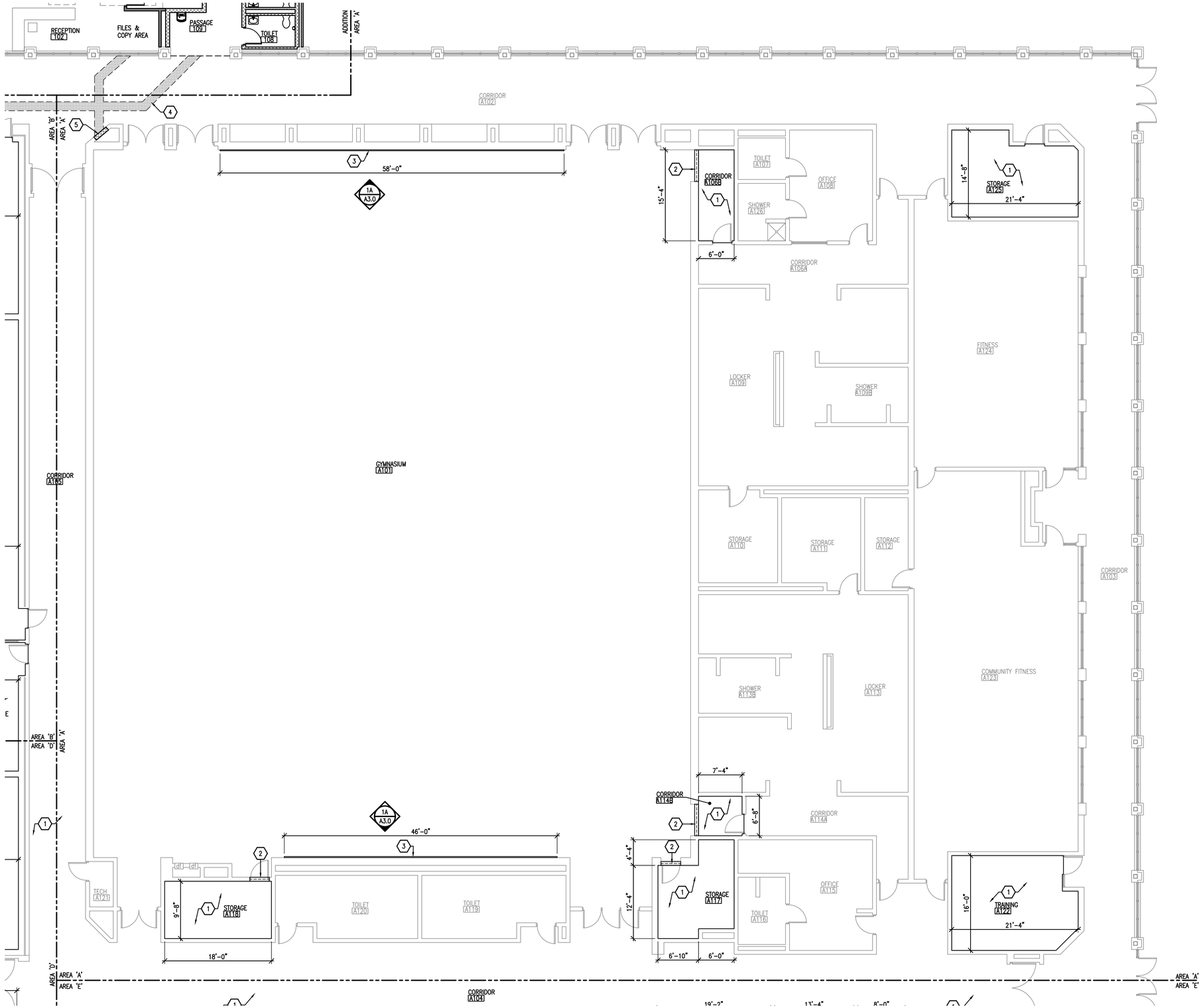

FLOOR PLAN AREA 'A'

SCALE: 1/8" = 1'-0"

N

REFER TO A2.0 CORRIDOR PLAN FOR ADDITIONAL SCOPE IN EXISTING CORRIDORS

KEYNOTES

1. INSTALL NEW FLOORING AND WALL BASE. REFER TO ROOM FINISH SCHEDULE.
2. REINSTALL PREVIOUSLY REMOVED METAL THRESHOLD WHEN FLOORING WORK IS COMPLETE.
3. INSTALL NEW 7'-0" TALL ATHLETIC WALL PADDING. REFER TO SPECIFICATIONS AND ELEVATIONS. PROVIDE CUTOUTS AT ALL ELECTRICAL OUTLETS, SWITCHES, FIRE ALARM DEVICES, ETC. FIELD VERIFY EXACT LOCATIONS. PAINT FINISH, TO MATCH EXISTING ADJACENT, ANY WALL AREAS EXPOSED WHERE PREVIOUS PADDING REMOVED AND NOT COVERED BY NEW PADDING, FIELD VERIFY EXTENTS.
4. HATCHED AREA INDICATES PATCH AND REPAIR CONCRETE SLAB AS NEEDED WHERE PREVIOUSLY REMOVED FOR PLUMBING WORK. COORDINATE LOCATION AND EXTENTS WITH PLUMBING CONTRACTOR. PATCH TO BE FLUSH AND LEVEL WITH AND MATCH EXISTING ADJACENT SLAB THICKNESS OVER VAPOR BARRIER. DRILL AND DOWEL NEW PATCH INTO EXISTING ADJACENT SLAB WITH 8" DOWELS AT 24" O,C, SET INTO EXISTING SLAB WITH EPOXY GROUT.
5. TOOTH IN NEW 8" CONCRETE MASONRY WHERE PREVIOUSLY REMOVED TO ACCOMMODATE PLUMBING AND ELECTRICAL ACCESS CHASE. COORDINATE WITH PLUMBING AND ELECTRICAL CONTRACTOR. FIELD VERIFY EXTENTS. PATCH TO MATCH EXISTING ADJACENT CONSTRUCTION. PAINT FINISH TO MATCH EXISTING ADJACENT.

GENERAL NOTES

1. AT ROOM ENTRY DOORS REMOVE EXISTING "NIGHT LOCK" DEVICE IN FLOOR, SALVAGE FOR REINSTALLATION. REINSTALL WHEN FLOORING REMOVAL AND REPLACEMENT IS COMPLETE. FIELD VERIFY LOCATIONS AND QUANTITIES.

KEY PLAN

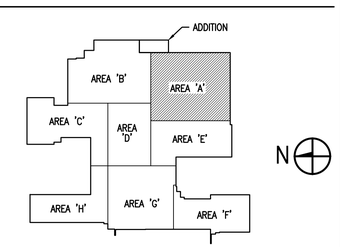

INTEGRATED DESIGNS INC.
ARCHITECTURE ENGINEERING CONSULTING
MARQUETTE OFFICE:
1021 W. BARAGA AVENUE
MARQUETTE, MI 49855
PHONE: (906)228-4449
FAX: (906)228-7524
BIRGHTON OFFICE:
10120 GRAND RIVER AVE., SUITE 600
BRIGHTON, MI 48116
PHONE: (810)229-2701
FAX: (810)229-6787

HARBOR BEACH COMMUNITY SCHOOLS
PHASE 1 - 2026 ADDITION & RENOVATIONS
HARBOR BEACH, MICHIGAN

PROJECT NO. 24-138

NO.	REVISIONS	DATE
0	FOR CONSTRUCTION	8-28-26

	BY	DATE
DESIGN		
DRAWN		
CHECKED		
APPROVED		

FLOOR PLAN AREA 'A'

COPYRIGHT © 2026 INTEGRATED DESIGNS INC.

A2.2

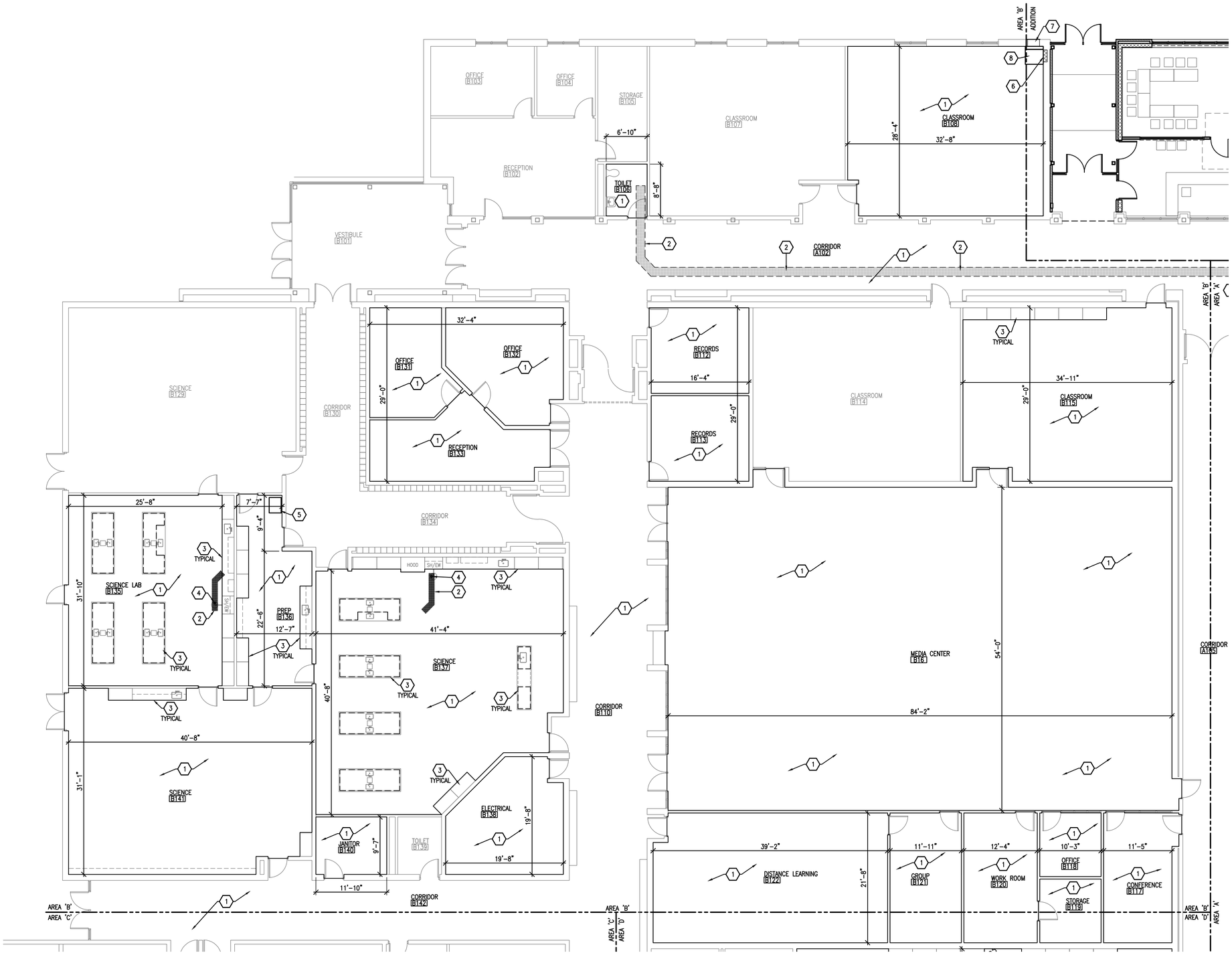

FLOOR PLAN AREA 'B'

SCALE: 1/8" = 1'-0"

N

REFER TO A2.0 CORRIDOR PLAN FOR ADDITIONAL SCOPE IN EXISTING CORRIDORS

KEYNOTES

1. INSTALL NEW FLOORING AND WALL BASE. REFER TO ROOM FINISH PLAN A7.2
2. HATCHED AREA INDICATES PATCH AND REPAIR CONCRETE SLAB AS NEEDED WHERE PREVIOUSLY REMOVED FOR PLUMBING WORK. COORDINATE LOCATION AND EXTENTS WITH PLUMBING CONTRACTOR. PATCH TO BE FLUSH AND LEVEL WITH AND MATCH EXISTING ADJACENT SLAB THICKNESS OVER VAPOR BARRIER. DRILL AND DOWEL NEW PATCH INTO EXISTING ADJACENT SLAB WITH 8" DOWELS AT 24" O.C, SET INTO EXISTING SLAB WITH EPOXY GROUT.
3. REINSTALL ANY EXISTING CASEWORK THAT WAS PREVIOUSLY REMOVED TO ACCOMMODATE COMPLETION OF NEW FLOORING INSTALLATION. INSTALL NEW WALL BASE WHERE PREVIOUSLY REMOVED ON ALL CASEWORK. FIELD VERIFY EXTENTS AND LOCATIONS OF CASEWORK.
4. NEW FLOOR DRAIN, REFER TO AND COORDINATE WITH PLUMBING DRAWINGS AND PLUMBING CONTRACTOR.
5. NEW VENTED CHEMICAL STORAGE CABINET, SUPPLIED BY OWNER. COORDINATE POWER REQUIREMENTS AND LOCATION WITH ELECTRICAL DRAWINGS.
6. INFILL EXISTING MASONRY OPENING WITH 8" CONCRETE MASONRY WHERE MECHANICAL PENETRATION ABANDONED. TOOTH NEW MASONRY INTO EXISTING, PAINT FINISH. FIELD VERIFY EXACT SIZE AND LOCATION.
7. NEW MASONRY OPENING, LINTEL, AND MECHANICAL LOUVER. COORDINATE SIZE AND LOCATION WITH MECHANICAL CONTRACTOR.
8. RELOCATED MECHANICAL EQUIPMENT. REFER TO MECHANICAL PLANS.

GENERAL NOTES

1. AT ROOM ENTRY DOORS REMOVE EXISTING "NIGHT LOCK" DEVICE IN FLOOR, SALVAGE FOR REINSTALLATION. REINSTALL WHEN FLOORING REMOVAL AND REPLACEMENT IS COMPLETE. FIELD VERIFY LOCATIONS AND QUANTITIES.

KEY PLAN

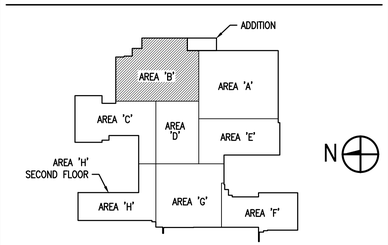

MARQUETTE OFFICE:
1021 W. BARAGA AVENUE
MARQUETTE, MI 49855
PHONE: (906)228-4400
FAX: (906)228-7524

BIRMINGHAM OFFICE:
607 SHELBY STREET, SUITE 600
BIRMINGHAM, MI 48009
PHONE: (810)229-2701
FAX: (810)224-6787

INTEGRATED DESIGNS INC.
ID ARCHITECTURE ENGINEERING CONSULTING

HARBOR BEACH COMMUNITY SCHOOLS
PHASE 1 - 2026 ADDITION & RENOVATIONS
HARBOR BEACH, MICHIGAN
PROJECT NO. 24-138

NO.	REVISIONS	DATE
0	FOR CONSTRUCTION	8-28-26

	BY	DATE
DESIGN	--	--
DRAWN	--	--
CHECKED	--	--
APPROVED	--	--

FLOOR PLAN
AREA 'B'

COPYRIGHT © 2026 INTEGRATED DESIGNS INC.

A2.3

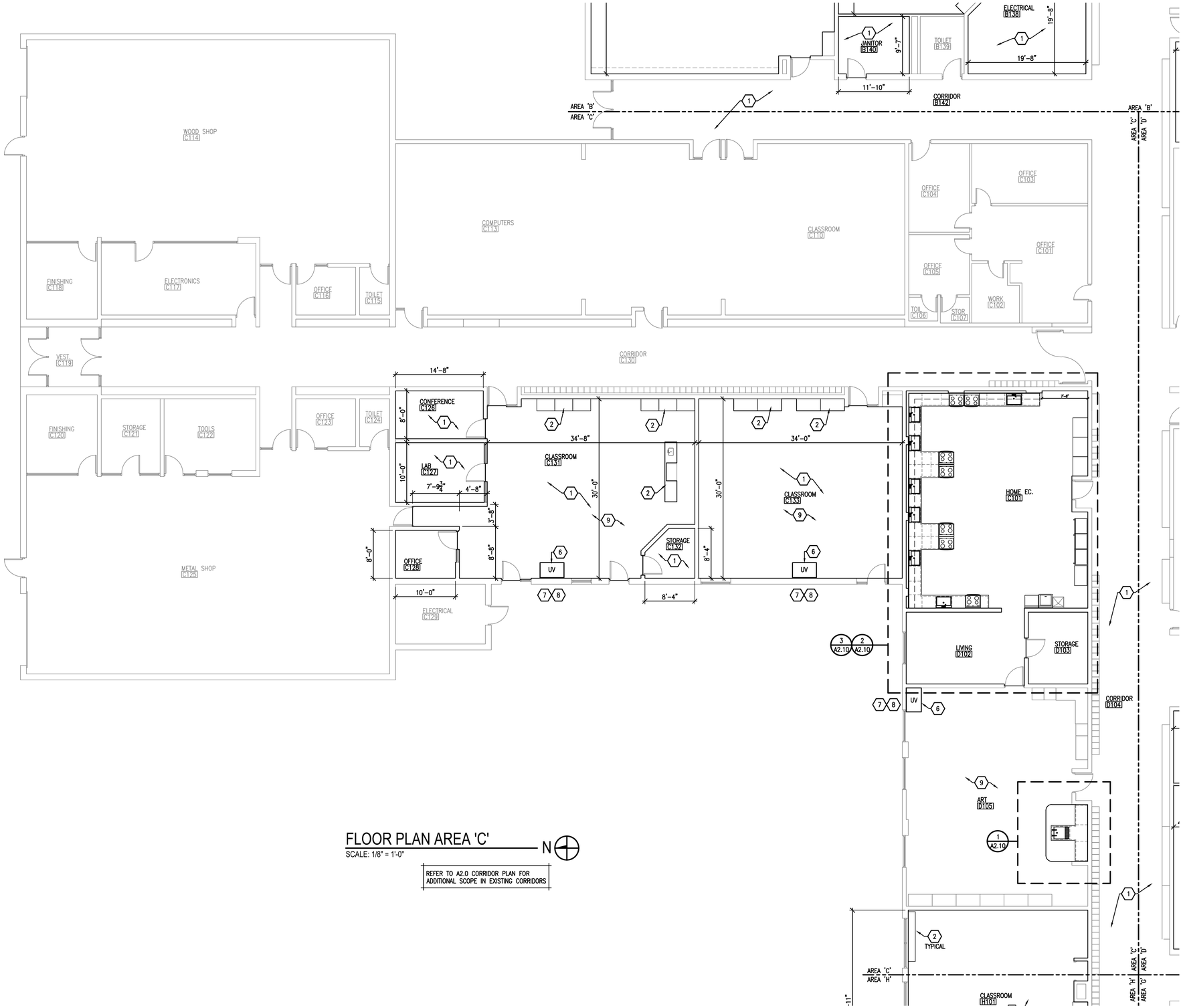

FLOOR PLAN AREA 'C'

SCALE: 1/8" = 1'-0"

N

REFER TO A2.0 CORRIDOR PLAN FOR ADDITIONAL SCOPE IN EXISTING CORRIDORS

KEYNOTES

1. INSTALL NEW FLOORING AND WALL BASE, REFER TO FLOOR FINISH PLAN A7.2.
2. REINSTALL ANY EXISTING CASEWORK THAT WAS PREVIOUSLY REMOVED TO ACCOMMODATE COMPLETION OF NEW FLOORING INSTALLATION. INSTALL NEW WALL BASE WHERE PREVIOUSLY REMOVED ON ALL CASEWORK. FIELD VERIFY EXTENTS AND LOCATIONS OF CASEWORK.
3. EXISTING MECHANICAL EQUIPMENT TO REMAIN.
4. NOT USED
5. NOT USED
6. NEW MECHANICAL EQUIPMENT. REFER TO MECHANICAL DRAWINGS AND COORDINATE WITH MECHANICAL CONTRACTOR.
7. PATCH EXISTING EXTERIOR MASONRY WALL WHERE MECHANICAL EQUIPMENT PREVIOUSLY REMOVED. FIELD VERIFY OPENING SIZE. PATCH WITH MATERIALS TO MATCH EXISTING CONSTRUCTION, FACE BRICK, RIGID INSULATION, CONCRETE MASONRY.
8. REMOVE PORTION OF EXISTING EXTERIOR MASONRY WALL TO ACCOMMODATE NEW MECHANICAL EQUIPMENT. INSTALL NEW LINTEL ABOVE OPENING. REFER TO MECHANICAL PLANS AND COORDINATE WITH MECHANICAL CONTRACTOR.
9. REINSTALL ANY CEILING TILES AND GRID THAT WERE REMOVED TO ACCOMMODATE MECHANICAL WORK. FIELD VERIFY EXTENTS COORDINATE WITH MECHANICAL CONTRACTOR.

GENERAL NOTES

1. AT ROOM ENTRY DOORS REMOVE EXISTING "NIGHT LOCK" DEVICE IN FLOOR, SALVAGE FOR REINSTALLATION. REINSTALL WHEN FLOORING REMOVAL AND REPLACEMENT IS COMPLETE. FIELD VERIFY LOCATIONS AND QUANTITIES.

KEY PLAN

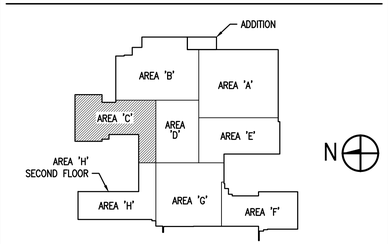

INTEGRATED DESIGNS INC.
ARCHITECTURE ENGINEERING CONSULTING
MARQUETTE OFFICE:
1021 W. BARAGA AVENUE
MARQUETTE, MI 49855
PHONE: (906)228-4493
FAX: (906)228-7524
BIRGHTON OFFICE:
8101 GRAND RIVER AVE., SUITE 600
BRIGHTON, MI 48116
PHONE: (810)229-2701
FAX: (810)229-6787

HARBOR BEACH COMMUNITY SCHOOLS
PHASE 1 - 2026 ADDITION & RENOVATIONS
HARBOR BEACH, MICHIGAN
PROJECT NO. 24-138

NO.	REVISIONS	DATE
0	FOR CONSTRUCTION	8-28-26

	BY	DATE
DESIGN		
DRAWN		
CHECKED		
APPROVED		

FLOOR PLAN
AREA 'C'

COPYRIGHT © 2026 INTEGRATED DESIGNS INC.

A2.4

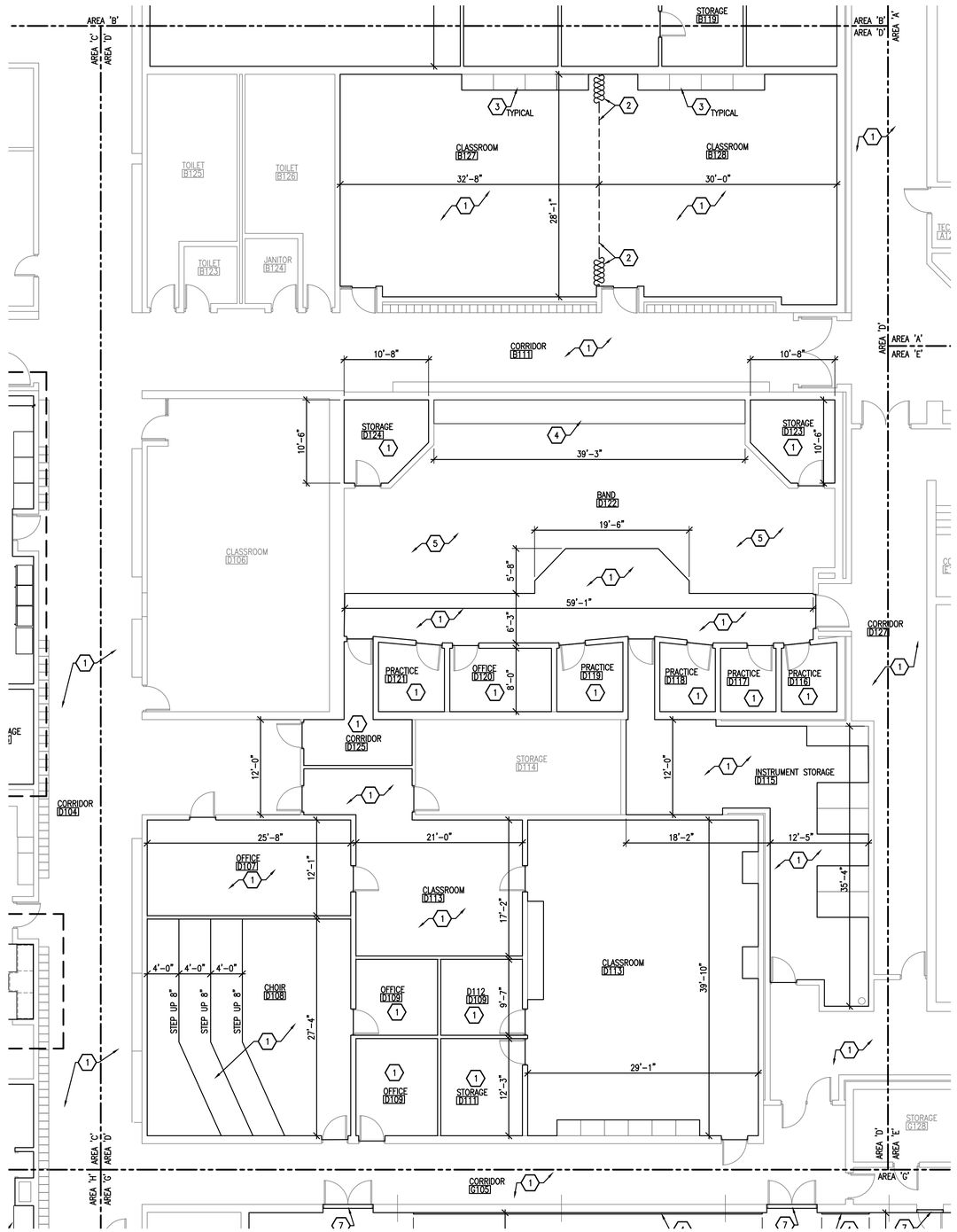

FLOOR PLAN AREA 'D'

SCALE: 1/8" = 1'-0"

N

REFER TO A2.0 CORRIDOR PLAN FOR ADDITIONAL SCOPE IN EXISTING CORRIDORS

KEYNOTES

1. INSTALL NEW FLOORING AND WALL BASE. REFER TO ROOM FINISH PLAN A7.2
2. INSTALL NEW CEILING MOUNTED DIVIDER CURTAIN AND ASSOCIATED HARDWARE, REFER TO SPECIFICATIONS. INSTALL CURTAIN WHERE CURTAIN PREVIOUSLY REMOVED. CURTAIN APPROXIMATELY 9'-0" HIGH. REMOVE, SALVAGE, AND REINSTALL ACOUSTICAL CEILING TILES AS NECESSARY TO ACCOMMODATE CURTAIN INSTALLATION. CONTRACTOR TO VERIFY EXISTING STRUCTURE AND SUPPORTS ARE ADEQUATE TO SUPPORT AND INSTALL NEW CURTAIN ASSEMBLY.
3. REINSTALL ANY EXISTING CASEWORK THAT WAS PREVIOUSLY REMOVED TO ACCOMMODATE COMPLETION OF NEW FLOORING INSTALLATION. INSTALL NEW WALL BASE WHERE PREVIOUSLY REMOVED ON ALL CASEWORK. FIELD VERIFY EXTENTS AND LOCATIONS OF CASEWORK.
4. INSTALL NEW MUSICAL INSTRUMENT STORAGE CABINETS. REFER TO MUSIC CASEWORK CONSULTANT DRAWINGS AND SPECIFICATIONS.
5. EXISTING CARPET FLOORING AND RISERS TO REMAIN.

GENERAL NOTES

1. AT ROOM ENTRY DOORS REMOVE EXISTING "NIGHT LOCK" DEVICE IN FLOOR, SALVAGE FOR REINSTALLATION. REINSTALL WHEN FLOORING REMOVAL AND REPLACEMENT IS COMPLETE. FIELD VERIFY LOCATIONS AND QUANTITIES.

KEY PLAN

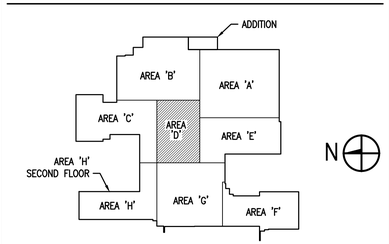

MARQUETTE OFFICE:
1021 W. BARAGA AVENUE
MARQUETTE, MI 49855
PHONE: (906)228-4449
FAX: (906)228-7524

BIRGHTON OFFICE:
601 CAMPUS CENTER AVE., SUITE 600
BRIGHTON, MI 48816
PHONE: (810)229-2701
FAX: (810)229-4787

INTEGRATED DESIGNS INC.
ARCHITECTURE ENGINEERING CONSULTING

HARBOR BEACH COMMUNITY SCHOOLS
PHASE 1 - 2026 ADDITION & RENOVATIONS
HARBOR BEACH, MICHIGAN
PROJECT NO. 24-138

NO.	REVISIONS	DATE
0	FOR CONSTRUCTION	8-28-26

	BY	DATE
DESIGN	--	--
DRAWN	--	--
CHECKED	--	--
APPROVED	--	--

FLOOR PLAN
AREA 'D'

COPYRIGHT © 2026 INTEGRATED DESIGNS INC.

A2.5

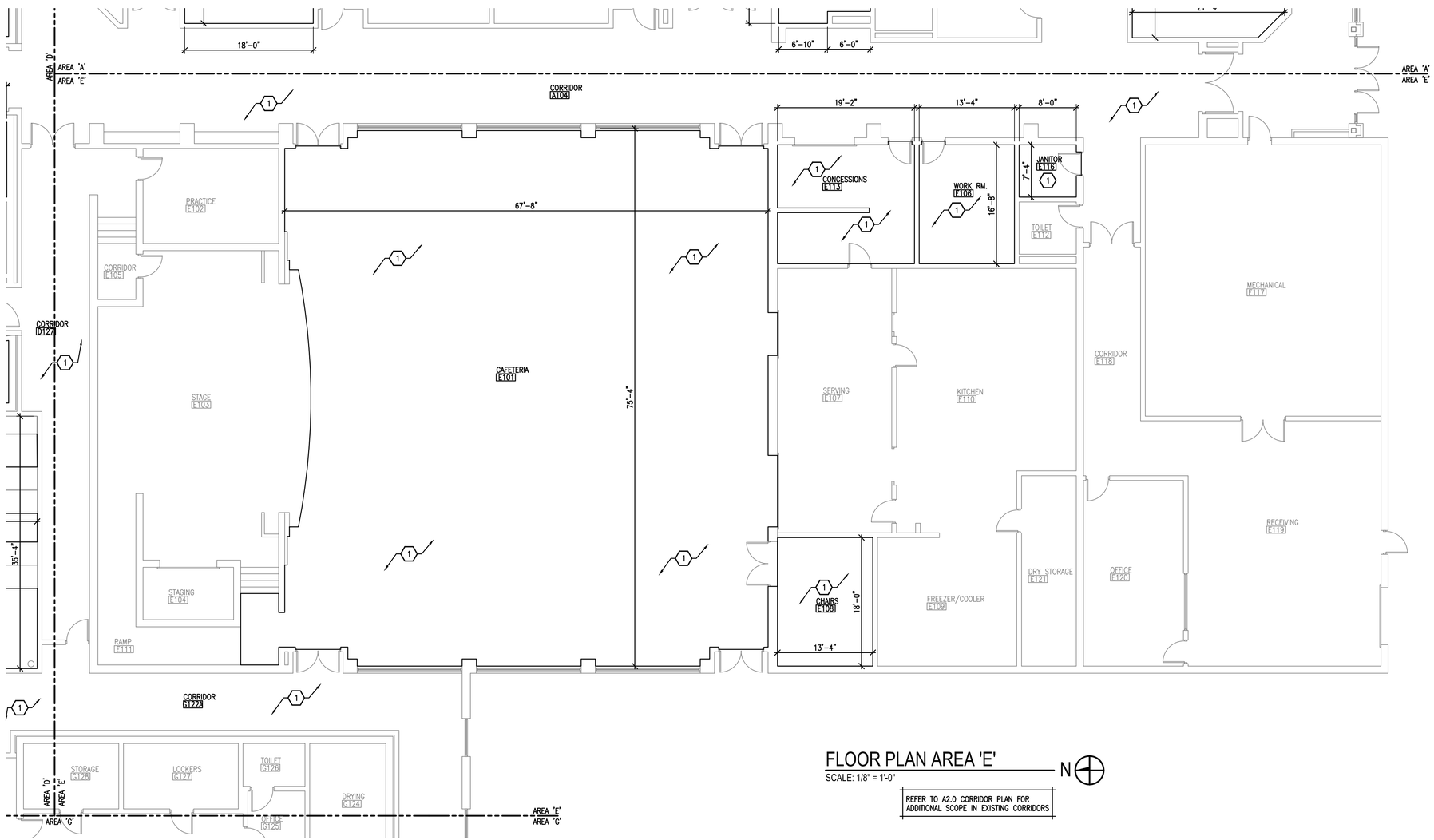

FLOOR PLAN AREA 'E'

SCALE: 1/8" = 1'-0"

N

REFER TO A2.0 CORRIDOR PLAN FOR ADDITIONAL SCOPE IN EXISTING CORRIDORS

KEYNOTES

1. INSTALL NEW FLOORING AND WALL BASE. REFER TO ROOM FINISH PLAN A7.2

GENERAL NOTES

1. AT ROOM ENTRY DOORS REMOVE EXISTING "NIGHT LOCK" DEVICE IN FLOOR, SALVAGE FOR REINSTALLATION. REINSTALL WHEN FLOORING REMOVAL AND REPLACEMENT IS COMPLETE. FIELD VERIFY LOCATIONS AND QUANTITIES.

KEY PLAN

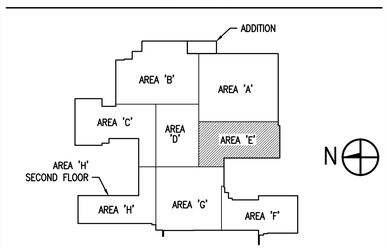

INTEGRATED DESIGNS INC.
ARCHITECTURE ENGINEERING CONSULTING

MARQUETTE OFFICE:
1021 W. BARAGA AVENUE
MARQUETTE, MI 49855
PHONE: (906)228-4449
FAX: (906)228-7524

BIRGHTON OFFICE:
5577 CLARKSTON RIDGE AVE., SUITE 600
BIRGHTON, MI 48816
PHONE: (810)229-2701
FAX: (810)229-4787

HARBOR BEACH COMMUNITY SCHOOLS
PHASE 1 - 2026 ADDITION & RENOVATIONS
HARBOR BEACH, MICHIGAN
PROJECT NO. 24-138

NO.	REVISIONS	DATE
0	FOR CONSTRUCTION	8-28-26

	BY	DATE
DESIGN		
DRAWN		
CHECKED		
APPROVED		

FLOOR PLAN
AREA 'E'

COPYRIGHT © 2026 INTEGRATED DESIGNS INC.

A2.6

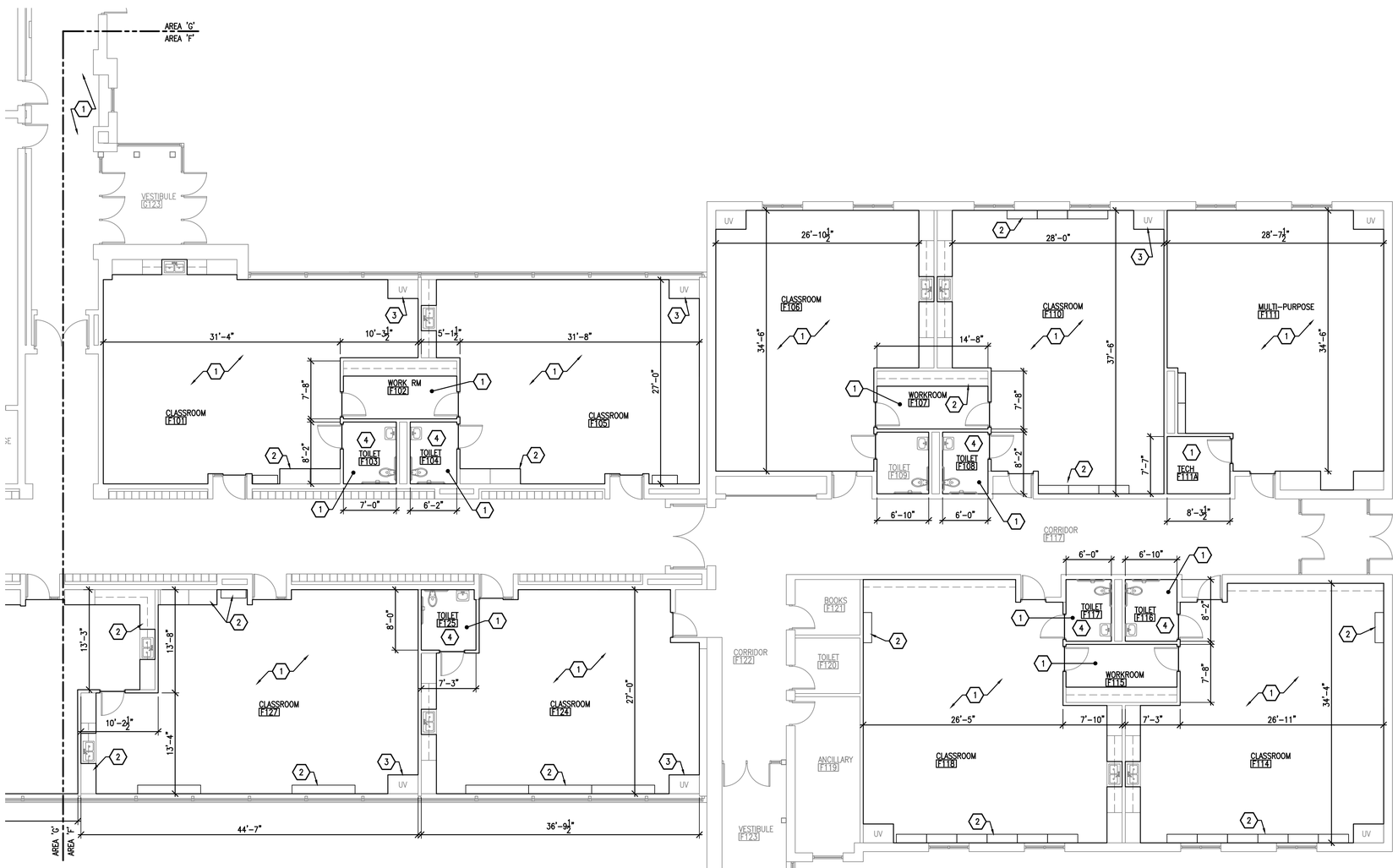

FLOOR PLAN AREA 'F'

SCALE: 1/8" = 1'-0"

N

REFER TO A2.0 CORRIDOR PLAN FOR ADDITIONAL SCOPE IN EXISTING CORRIDORS

KEYNOTES

1. INSTALL NEW FLOORING AND WALL BASE. REFER TO ROOM FINISH PLAN A7.2
2. REINSTALL ANY EXISTING CASEWORK THAT WAS PREVIOUSLY REMOVED TO ACCOMMODATE COMPLETION OF NEW FLOORING INSTALLATION. INSTALL NEW WALL BASE WHERE PREVIOUSLY REMOVED ON ALL CASEWORK. FIELD VERIFY EXTENTS AND LOCATIONS OF CASEWORK.
3. EXISTING MECHANICAL EQUIPMENT TO REMAIN.
4. REMOVE EXISTING FLOOR DRAIN AS NEEDED FOR FLOORING INSTALLATION. SALVAGE, CLEAN AND REINSTALL WHEN FLOORING IS COMPLETE.

GENERAL NOTES

1. AT ROOM ENTRY DOORS REMOVE EXISTING "NIGHT LOCK" DEVICE IN FLOOR, SALVAGE FOR REINSTALLATION. REINSTALL WHEN FLOORING REMOVAL AND REPLACEMENT IS COMPLETE. FIELD VERIFY LOCATIONS AND QUANTITIES.

KEY PLAN

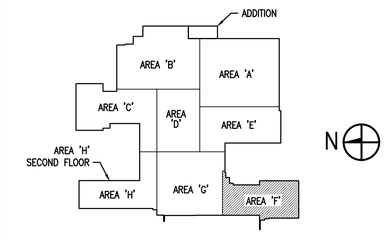

INTEGRATED DESIGNS INC.
ARCHITECTURE
ENGINEERING
CONSULTING

MARQUETTE OFFICE:
1021 W. BARAGA AVENUE
MARQUETTE, MI 49855
PHONE: (906)228-4483
FAX: (906)228-7524

BIRGHTON OFFICE:
5577 CLARKSTON RIDGE AVE., SUITE 600
BRIGHTON, MI 48116
PHONE: (810)229-2701
FAX: (810)229-4787

HARBOR BEACH COMMUNITY SCHOOLS
PHASE 1 - 2026 ADDITION & RENOVATIONS
HARBOR BEACH, MICHIGAN

PROJECT NO. 24-138

NO.	REVISIONS	DATE
0	FOR CONSTRUCTION	8-28-26

	BY	DATE
DESIGN		
DRAWN		
CHECKED		
APPROVED		

FLOOR PLAN AREA 'F'

COPYRIGHT © 2026 INTEGRATED DESIGNS INC.

A2.7

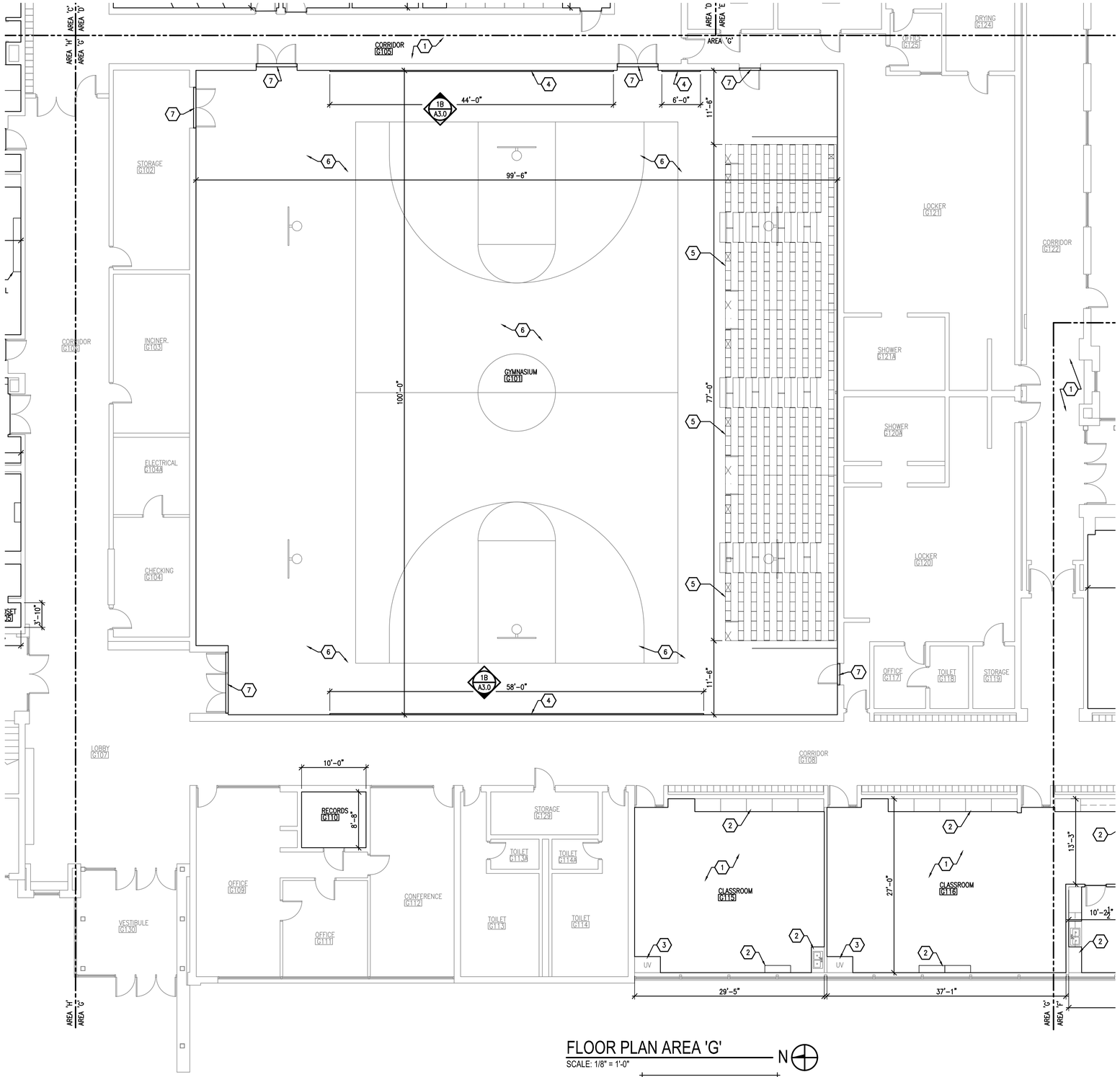

FLOOR PLAN AREA 'G'

SCALE: 1/8" = 1'-0"

N

REFER TO A2.0 CORRIDOR PLAN FOR ADDITIONAL SCOPE IN EXISTING CORRIDORS

KEYNOTES

1. INSTALL NEW FLOORING AND WALL BASE. REFER TO ROOM FINISH PLAN A7.2
2. REINSTALL ANY EXISTING CASEWORK THAT WAS PREVIOUSLY REMOVED TO ACCOMMODATE COMPLETION OF NEW FLOORING INSTALLATION. INSTALL NEW WALL BASE WHERE PREVIOUSLY REMOVED ON ALL CASEWORK. FIELD VERIFY EXTENTS AND LOCATIONS OF CASEWORK.
3. EXISTING MECHANICAL EQUIPMENT TO REMAIN.
4. INSTALL NEW 6'-0" TALL ATHLETIC WALL PADDING. REFER TO SPECIFICATIONS AND ELEVATIONS. PROVIDE CUTOUTS AT ALL ELECTRICAL OUTLETS, SWITCHES, FIRE ALARM DEVICES, ETC. FIELD VERIFY EXACT LOCATIONS. PAINT FINISH, TO MATCH EXISTING ADJACENT, ANY WALL AREAS EXPOSED WHERE PREVIOUS PADDING REMOVED AND NOT COVERED BY NEW PADDING, FIELD VERIFY EXTENTS.
5. INSTALL NEW RETRACTABLE BLEACHERS, REFER TO SPECIFICATIONS.
6. REFINISH EXISTING WOOD GYMNASIUM FLOOR. SAND, SEAL, AND RE-STRIPE GAME LINES. GAME LINES TO INCLUDE MAIN BASKETBALL COURT, TWO CROSS COURTS, MAIN VOLLEYBALL COURT, AND TWO CROSS VOLLEYBALL COURTS. FIELD VERIFY GAME LINE LAYOUTS AND LOCATIONS WITH EXISTING CONDITIONS. COORDINATE ADDITIONAL GAME LINES AND MARKINGS WITH OWNER.
7. REINSTALL PREVIOUSLY SALVAGED METAL THRESHOLDS WHEN FLOORING WORK IS COMPLETE.

GENERAL NOTES

1. AT ROOM ENTRY DOORS REMOVE EXISTING "NIGHT LOCK" DEVICE IN FLOOR, SALVAGE FOR REINSTALLATION. REINSTALL WHEN FLOORING REMOVAL AND REPLACEMENT IS COMPLETE. FIELD VERIFY LOCATIONS AND QUANTITIES.

KEY PLAN

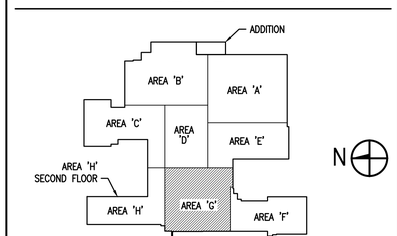

INTEGRATED DESIGNS INC.
ARCHITECTURE ENGINEERING CONSULTING
MARQUETTE OFFICE:
1021 W. BARAGA AVENUE
MARQUETTE, MI 49855
PHONE: (906)228-4403
FAX: (906)228-7524
BRIGHTON OFFICE:
8100 GRAND RIVER AVE., SUITE 600
BRIGHTON, MI 48116
PHONE: (810)229-2701
FAX: (810)229-6787

HARBOR BEACH COMMUNITY SCHOOLS
PHASE 1 - 2026 ADDITION & RENOVATIONS
HARBOR BEACH, MICHIGAN

PROJECT NO. 24-138

NO.	REVISIONS	DATE
0	FOR CONSTRUCTION	8-28-26

	BY	DATE
DESIGN	--	--
DRAWN	--	--
CHECKED	--	--
APPROVED	--	--

FLOOR PLAN AREA 'G'

COPYRIGHT © 2026 INTEGRATED DESIGNS INC.

A2.8

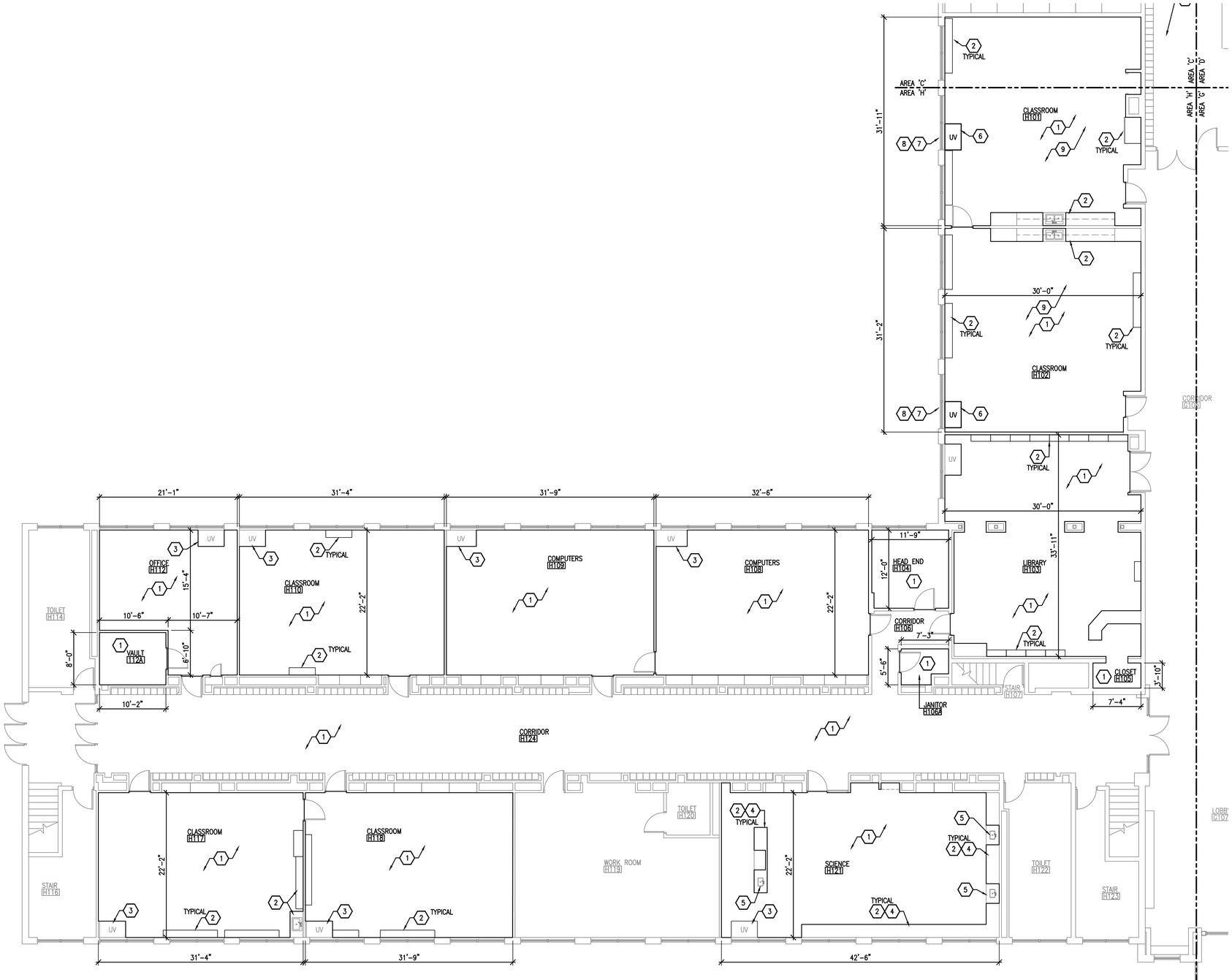

FLOOR PLAN AREA 'H'

SCALE: 1/8" = 1'-0"

N

REFER TO A2.0 CORRIDOR PLAN FOR ADDITIONAL SCOPE IN EXISTING CORRIDORS

KEYNOTES

1. INSTALL NEW FLOORING AND WALL BASE, REFER TO ROOM FINISH PLAN A7.2.
2. REINSTALL ANY EXISTING CASEWORK THAT WAS PREVIOUSLY REMOVED TO ACCOMMODATE COMPLETION OF NEW FLOORING INSTALLATION. INSTALL NEW WALL BASE WHERE PREVIOUSLY REMOVED ON ALL CASEWORK. FIELD VERIFY EXTENTS AND LOCATIONS OF CASEWORK.
3. EXISTING MECHANICAL EQUIPMENT TO REMAIN.
4. EXISTING SCIENCE GRADE EPOXY COUNTERTOPS TO REMAIN.
   ALTERNATE #1: REFINISH EPOXY COUNTERTOPS. SAND SMOOTH AND REPAIR ANY DAMAGE AND/OR DEEP SCRATCHES. RE-FINISH PER COUNTERTOP MANUFACTURERS RECOMMENDATIONS – FLOOD COAT WITH NEW EPOXY AND/OR POLISH EXISTING TO RESTORE TO AS NEW CONDITION. APPROXIMATELY 150 S.F. OF EXISTING COUNTERTOP.
5. EXISTING INTEGRAL SINKS TO REMAIN, REMOVE EXISTING FAUCET FIXTURE, REFER TO PLUMBING.
6. NEW MECHANICAL EQUIPMENT. REFER TO MECHANICAL DRAWINGS AND COORDINATE WITH MECHANICAL CONTRACTOR. PATCH AND REPAIR CONCRETE FLOORING AS NEEDED TO ACCOMMODATE MECHANICAL EQUIPMENT MODIFICATIONS, FIELD VERIFY EXTENTS, PREPARE SLAB FOR NEW FLOOR FINISHES.
7. PATCH EXISTING EXTERIOR MASONRY WALL WHERE MECHANICAL EQUIPMENT PREVIOUSLY REMOVED. FIELD VERIFY OPENING SIZE. PATCH WITH MATERIALS TO MATCH EXISTING CONSTRUCTION, FACE BRICK, RIGID INSULATION, CONCRETE MASONRY. COORDINATE WITH MECHANICAL DRAWINGS AND MECHANICAL CONTRACTOR.
8. REMOVE PORTION OF EXISTING EXTERIOR MASONRY WALL TO ACCOMMODATE NEW MECHANICAL EQUIPMENT. INSTALL NEW LINTEL ABOVE OPENING. REFER TO MECHANICAL PLANS AND COORDINATE WITH MECHANICAL CONTRACTOR.
9. REINSTALL ANY CEILING TILES AND GRID THAT WERE REMOVED TO ACCOMMODATE MECHANICAL WORK. FIELD VERIFY EXTENTS COORDINATE WITH MECHANICAL CONTRACTOR.

GENERAL NOTES

1. AT ROOM ENTRY DOORS REMOVE EXISTING "NIGHT LOCK" DEVICE IN FLOOR, SALVAGE FOR REINSTALLATION. REINSTALL WHEN FLOORING REMOVAL AND REPLACEMENT IS COMPLETE. FIELD VERIFY LOCATIONS AND QUANTITIES.

KEY PLAN

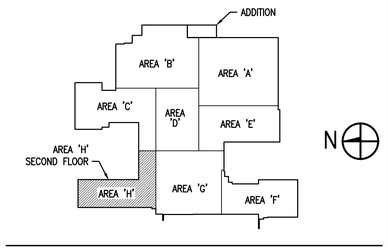

MARQUETTE OFFICE:
1021 W. BARAGA AVENUE
MARQUETTE, MI 49855
PHONE: (906)228-4483
FAX: (906)228-7524

BIRGHTON OFFICE:
5577 CLARKSTON RIVER AVE., SUITE 600
BRIGHTON, MI 48116
PHONE: (810)229-2701
FAX: (810)229-4787

INTEGRATED DESIGNS INC.
ARCHITECTURE
ENGINEERING
CONSULTING

HARBOR BEACH COMMUNITY SCHOOLS
PHASE 1 - 2026 ADDITION & RENOVATIONS
HARBOR BEACH, MICHIGAN

PROJECT NO. 24-138

NO.	REVISIONS	DATE
0	FOR CONSTRUCTION	8-26-26

	BY	DATE
DESIGN		
DRAWN		
CHECKED		
APPROVED		

FLOOR PLAN AREA 'H'

COPYRIGHT © 2026 INTEGRATED DESIGNS INC.

A2.9

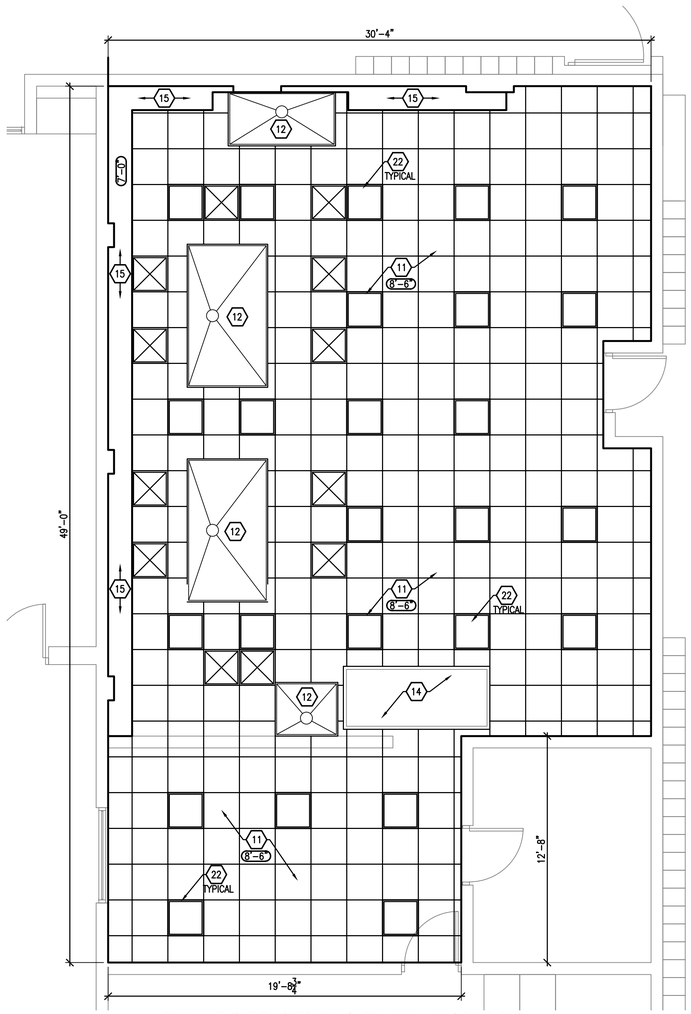

ENLARGED CEILING PLAN - HOME EC (3 / A2.10)

SCALE: 1/4" = 1'-0"

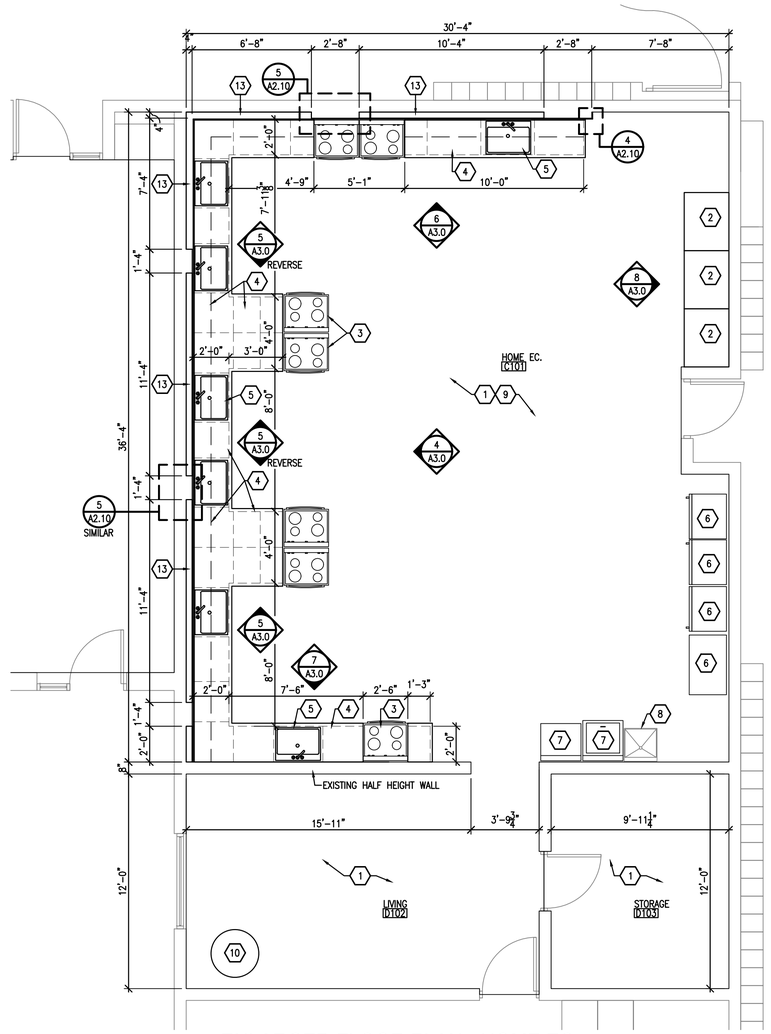

ENLARGED FLOOR PLAN - HOME EC. (2 / A2.10)

SCALE: 1/4" = 1'-0"

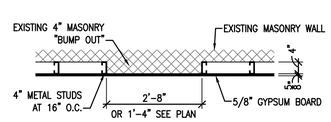

PLAN DETAIL (5 / A2.10)

SCALE = 1/2" = 1'-0"

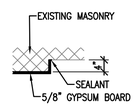

PLAN DETAIL (4 / A2.10)

SCALE = 1/2" = 1'-0"

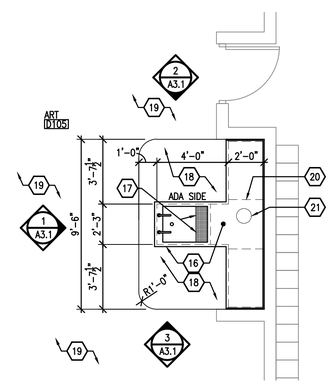

ENLARGED FLOOR PLAN - ART (1 / A2.10)

SCALE: 1/4" = 1'-0"

KEYNOTES

1. INSTALL NEW FLOORING AND WALL BASE. REFER TO ROOM FINISH SCHEDULE A7.1
2. NEW TALL STORAGE CABINETS, REFER TO INTERIOR ELEVATIONS.
3. ELECTRIC OVEN, SUPPLIED BY OWNER INSTALLED BY CONTRACTOR, TYPICAL OF 7.
4. INSTALL NEW PLASTIC LAMINATE COUNTERTOPS, BASE CABINETS, AND UPPER CABINETS REFER TO INTERIOR ELEVATIONS.
5. NEW SINK AND FIXTURES, TYPICAL OF 7. REFER TO PLUMBING PLANS.
6. RELOCATE AND REINSTALL PREVIOUSLY SALVAGED REFRIGERATORS AND FREEZERS.
7. REINSTALL PREVIOUSLY SALVAGED CLOTHES WASHER AND DRYER.
8. REINSTALL EXISTING UTILITY SINK.
9. PAINT FINISH ALL WALLS.
10. INSTALL OWNER SUPPLIED KILN, REFER TO AND COORDINATE WITH MECHANICAL CONTRACTOR AND EXHAUST REQUIREMENTS.
11. 2x2 SUSPENDED ACOUSTICAL CEILING AND METAL GRID.
12. EXHAUST HOOD, REFER TO MECHANICAL PLANS.
13. INFILL MASONRY RECESSES WITH 4" 5/8" GYPSUM BOARD ON 4" METAL STUDS. REFER TO WALL SECTION.
14. EXISTING CEILING MOUNTED UNIT VENTILATOR, REFER TO MECHANICAL.
15. GYPSUM BOARD SOFFIT, REFER TO WALL SECTION.
16. CUSTOM MANUFACTURED STAINLESS STEEL COUNTERTOP AND BACK SPLASH WITH INTEGRAL 24"x30" STAINLESS STEEL SINK BASIN WITH DRYING GRATE, ON PLASTIC LAMINATE FACED BASE CABINETS.
17. DUAL FAUCET FIXTURES, REFER TO PLUMBING PLANS.
18. INSTALL SHEET VINYL FLOORING IN AREA WHERE CARPET PREVIOUSLY REMOVED.
19. EXISTING CARPET FLOORING TO REMAIN.
20. AT LOCATION INDICATED, PROVIDE COUNTERTOP SUPPORT IN LIEU OF CABINET END PANEL SUPPORT. INTENT IS FOR UNOBSTRUCTED ACCESS TO CLAY TRAP AND PLUMBING.
21. APPROXIMATE LOCATION OF CLAY TRAP. REFER TO PLUMBING DRAWINGS COORDINATE WITH PLUMBING CONTRACTOR.
22. NEW LIGHTING FIXTURE, REFER TO LIGHTING PLANS.
23. NEW MECHANICAL GRILL/DIFFUSER REFER TO MECHANICAL PLANS.

GENERAL NOTES

1. AT ROOM ENTRY DOORS REMOVE EXISTING "NIGHT LOCK" DEVICE IN FLOOR, SALVAGE FOR REINSTALLATION. REINSTALL WHEN FLOORING REMOVAL AND REPLACEMENT IS COMPLETE. FIELD VERIFY LOCATIONS AND QUANTITIES.

MARQUETTE OFFICE:
1021 W. BARAGA AVENUE
MARQUETTE, MI 49855
PHONE: (906)228-4400
FAX: (906)228-7524

BIRGHTON OFFICE:
210 EAST GRAND RIVER AVE., SUITE 600
BRIGHTON, MI 48116
PHONE: (810)229-2701
FAX: (810)229-6787

INTEGRATED DESIGNS INC.
ARCHITECTURE ENGINEERING CONSULTING

HARBOR BEACH COMMUNITY SCHOOLS
PHASE 1 - 2026 ADDITION & RENOVATIONS
HARBOR BEACH, MICHIGAN
PROJECT NO. 24-138

	BY	DATE
DESIGN	-	-
DRAWN	-	-
CHECKED	-	-
APPROVED	-	-

NO.	REVISIONS	DATE
0	FOR CONSTRUCTION	8-28-26

ENLARGED FLOOR & CEILING PLAN

COPYRIGHT © 2026 INTEGRATED DESIGNS INC.

A2.10

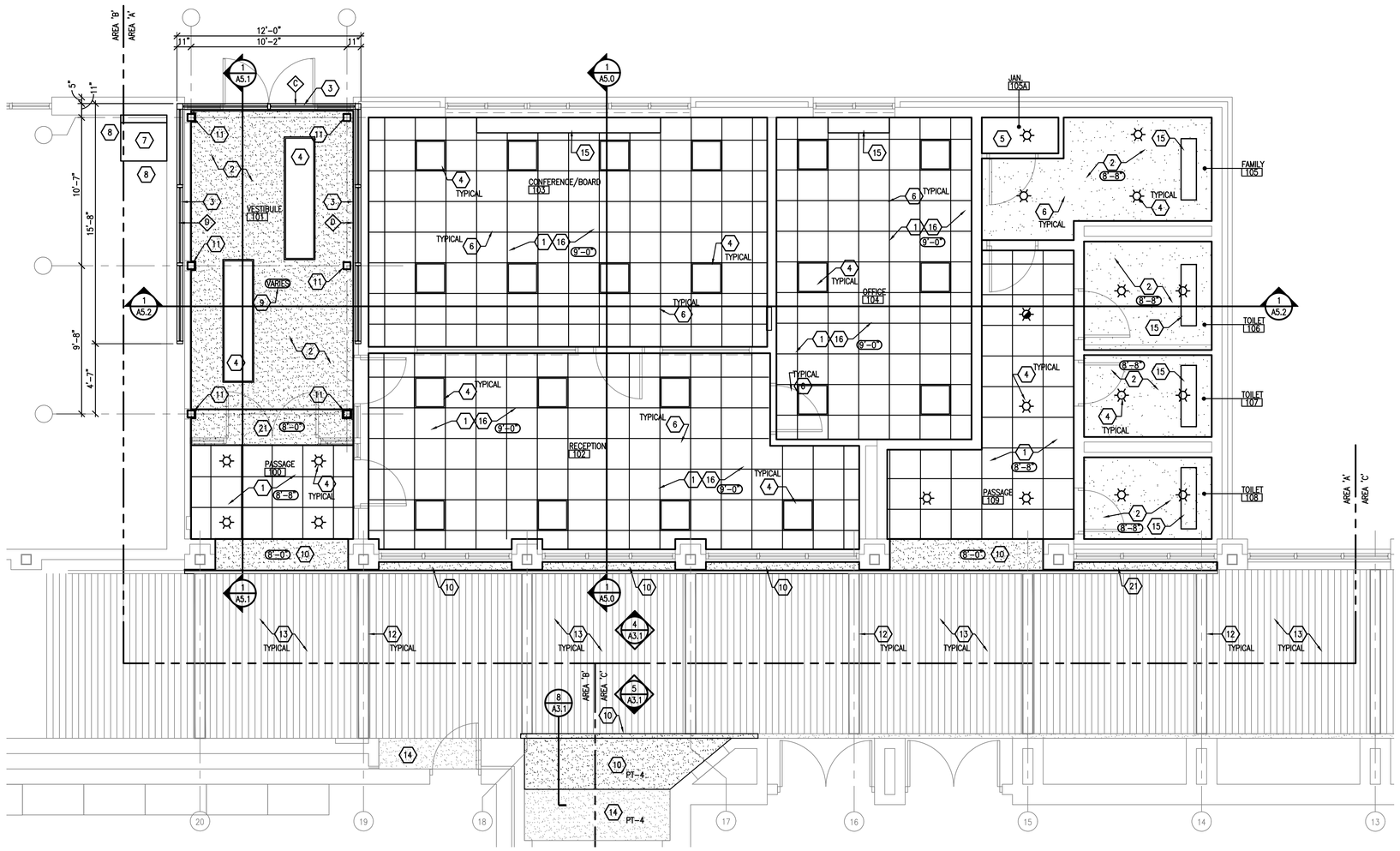

REFLECTED CEILING PLAN - ADDITION

SCALE: 1/4" = 1'-0"

N

KEYNOTES

1. INSTALL NEW 2x2 ACOUSTICAL CEILING TILE AND METAL GRID SYSTEM.
2. INSTALL NEW GYPSUM BOARD CEILING AND SUSPENSION SYSTEM, PAINT FINISH
3. CLEARSTORY WINDOWS ABOVE. REFER TO EXTERIOR ELEVATIONS AND WINDOW SCHEDULE.
4. LIGHTING FIXTURE, REFER TO LIGHTING PLANS
5. NO CEILING IN THIS AREA, EXPOSED STRUCTURE ABOVE.
6. MECHANICAL LOUVER/GRILLE. REFER TO MECHANICAL PLANS.
7. MODIFIED MECHANICAL EQUIPMENT, REFER TO MECHANICAL PLANS.
8. MODIFY EXISTING ACOUSTICAL CEILING TILES AND GRID AS NEEDED IN THIS LOCATION TO ACCOMMODATE REPOSITIONING OF EXISTING MECHANICAL UNIT. FIELD VERIFY EXTENTS.
9. INDICATED CEILING HEIGHT A.F.F. VARIES WITH RAMP. 16'-7 TO 17'-0"
10. 5/8" GYPSUM BOARD ON METAL STUD FRAMING REFER TO BUILDING SECTIONS. PAINT FINISH.
11. 6x6 STEEL COLUMN, REFER TO FRAMING PLAN. PAINT FINISH.
12. EXISTING STEEL ROOF/CEILING BEAM TO REMAIN.
13. EXISTING 3-1/2" DOVETAIL ACOUSTICAL ROOF DECK TO REMAIN.
14. EXISTING GYPSUM BOARD SOFFIT TO REMAIN. PATCH AND REPAIR AS NECESSARY, PAINT FINISH PT-4
15. CEILING MOUNTED HEATING PANEL, REFER TO AND COORDINATE WITH MECHANICAL DRAWINGS.
16. INSTALL SOUND BATT INSULATION ABOVE CEILING GRID. REFER TO SPECIFICATIONS.

KEY PLAN

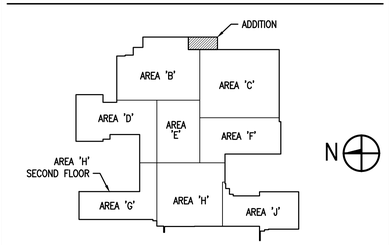

MARQUETTE OFFICE:
1021 W. BARAGA AVENUE
MARQUETTE, MI 49855
PHONE: (906)228-4403
FAX: (906)228-7524

BIRGHTON OFFICE:
5577 CLARKSTON RIVER AVE., SUITE 600
BIRGHTON, MI 48116
PHONE: (810)229-2701
FAX: (810)229-4787

INTEGRATED DESIGNS INC.
ARCHITECTURE
ENGINEERING
CONSULTING

HARBOR BEACH COMMUNITY SCHOOLS
PHASE 1 - 2026 ADDITION & RENOVATIONS
HARBOR BEACH, MICHIGAN
PROJECT NO. 24-138

	BY	DATE
DESIGN	--	--
DRAWN	--	--
CHECKED	--	--
APPROVED	--	--

NO.	REVISIONS	DATE
0	FOR CONSTRUCTION	8-28-26

ADDITION
CEILING PLAN

COPYRIGHT © 2026 INTEGRATED DESIGNS INC.

A2.11

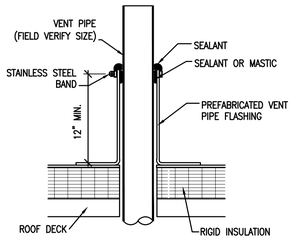

TYPICAL ROOF VENT

SCALE: 1-1/2" = 1'-0"

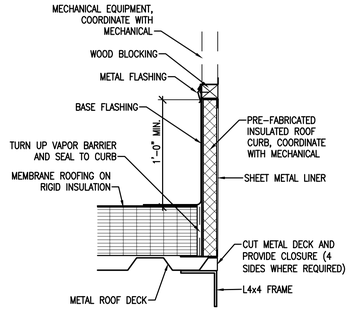

TYPICAL MECHANICAL CURB

SCALE: 1-1/2" = 1'-0"

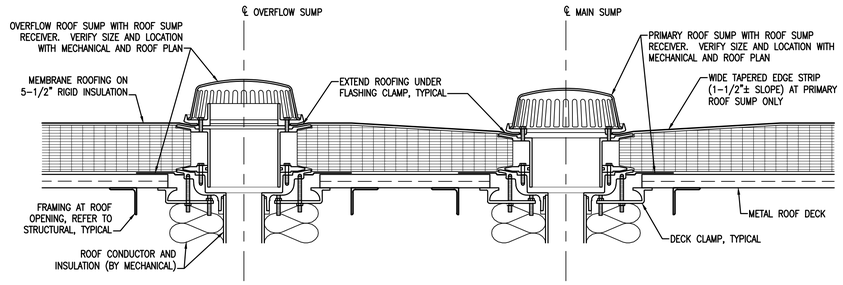

TYPICAL ROOF SUMP AND OVERFLOW DETAIL

SCALE: 1-1/2" = 1'-0"

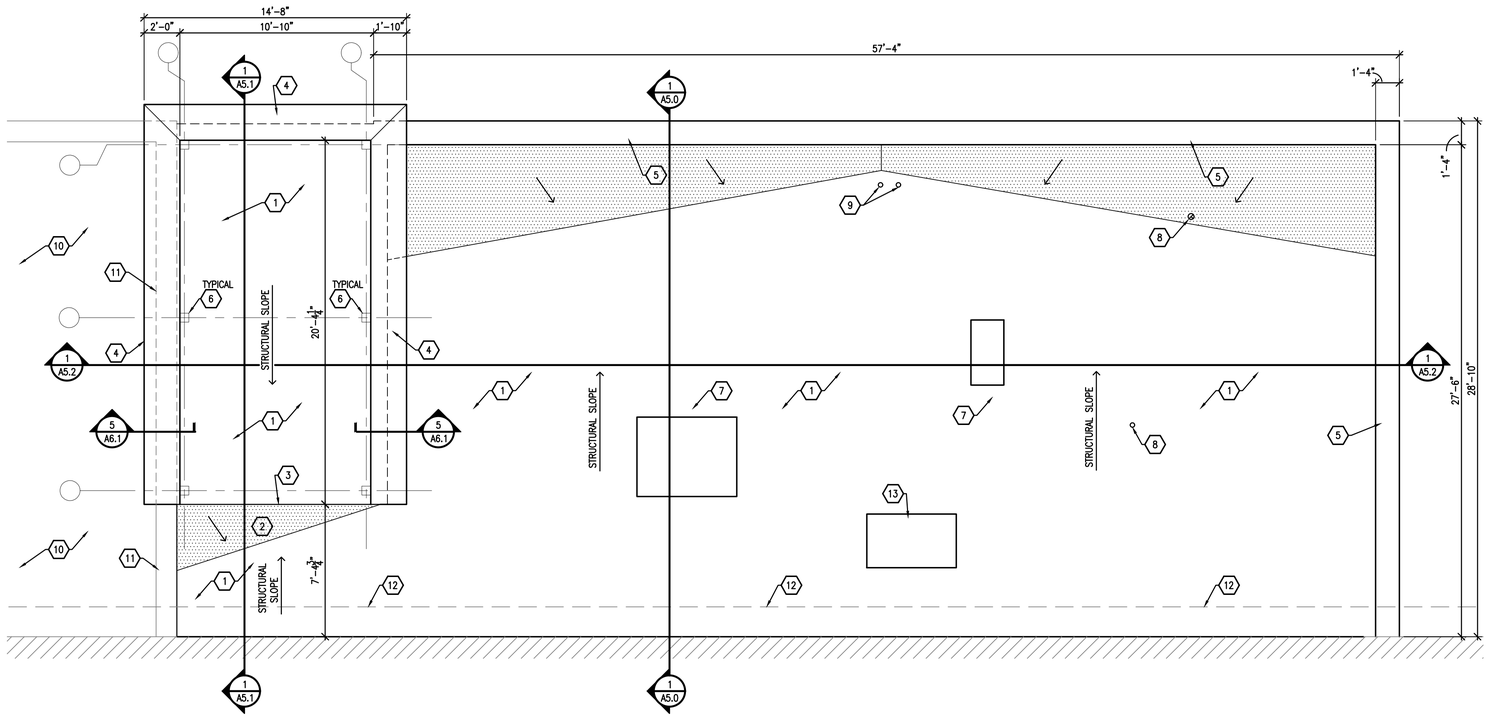

ROOF PLAN - ADDITION

SCALE: 1/4" = 1'-0"

N

KEYNOTES

1. SINGLE PLY MEMBRANE ROOFING ON MINIMUM 5-1/2" RIGID INSULATION ON METAL ROOF DECK.
2. HATCHED AREA INDICATES TAPERED INSULATION TO PROVIDE POSITIVE DRAINAGE TO ROOF DRAINS. SLOPE MINIMUM 1/4" PER FOOT IN DIRECTION SHOWN.
3. ROOF EDGE, EXTEND MEMBRANE DOWN WALL TO LOWER ROOF LEVEL.
4. PRE-FINISHED METAL WRAP ON INSULATION AT ROOF PARAPET. REFER TO BUILDING AND WALL SECTIONS FOR PARAPET PROFILE.
5. PRE-FINISHED METAL PARAPET COVER. REFER TO BUILDING AND WALL SECTIONS.
6. STEEL COLUMNS BELOW, REFER TO FRAMING PLAN.
7. ROOFTOP MECHANICAL EQUIPMENT, REFER TO AND COORDINATE WITH MECHANICAL PLAN. FLASH AND SEAL CURBS AND PENETRATIONS PER ROOFING MANUFACTURERS REQUIREMENTS.
8. VENT THROUGH ROOF, REFER TO AND COORDINATE WITH MECHANICAL AND PLUMBING PLANS. FLASH AND SEAL PENETRATIONS PER ROOFING MANUFACTURERS REQUIREMENTS.
9. ROOF DRAIN AND OVERFLOW DRAIN. REFER TO PLUMBING PLANS/ FLASH AND SEAL PER ROOFING MANUFACTURERS REQUIREMENTS.
10. EXISTING MEMBRANE ROOFING TO REMAIN.
11. EXISTING PARAPET TO REMAIN. REMOVE AND REPLACE PRE-FINISHED METAL CAP AS NEEDED TO ACCOMMODATE NEW NEW CONSTRUCTION.
12. INDICATES EXISTING ROOF OVERHANG ABOVE.
13. ROOF TOP ELECTRICAL EQUIPMENT, REFER TO AND COORDINATE WITH ELECTRICAL PLAN. FLASH AND SEAL CURBS AND PENETRATIONS PER ROOFING MANUFACTURERS REQUIREMENTS.

KEY PLAN

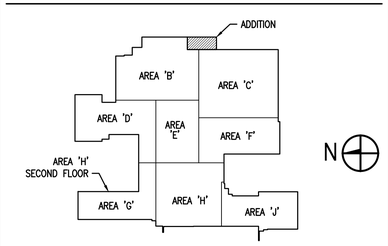

MARQUETTE OFFICE:
1021 W. BARAGA AVENUE
MARQUETTE, MI 49855
PHONE: (906)228-4400
FAX: (906)228-7524

BIRGHTON OFFICE:
201 E. GRAND RIVER AVE., SUITE 600
BRIGHTON, MI 48116
PHONE: (810)229-2701
FAX: (810)229-6787

INTEGRATED DESIGNS INC.
ARCHITECTURE ENGINEERING CONSULTING

HARBOR BEACH COMMUNITY SCHOOLS
PHASE 1 - 2026 ADDITION & RENOVATIONS
HARBOR BEACH, MICHIGAN

PROJECT NO. 24-138

NO.	REVISIONS	DATE
0	FOR CONSTRUCTION	8-28-26

	BY	DATE
DESIGN	--	--
DRAWN	--	--
CHECKED	--	--
APPROVED	--	--

ADDITION ROOF PLAN

COPYRIGHT © 2026 INTEGRATED DESIGNS INC.

A2.12

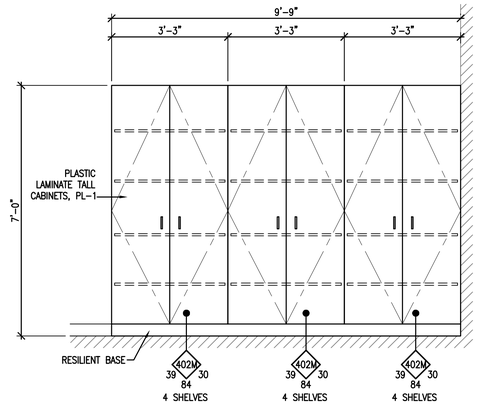

INTERIOR ELEVATION - HOME EC

SCALE: 1/2" = 1'-0"

8 / A3.0

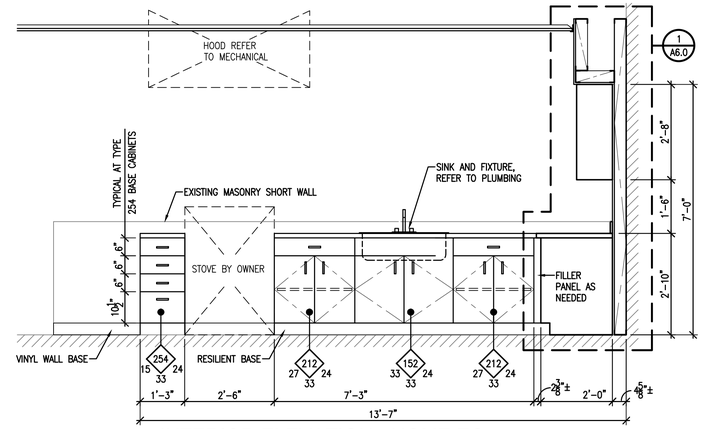

INTERIOR ELEVATION - HOME EC

SCALE: 1/2" = 1'-0"

7 / A3.0

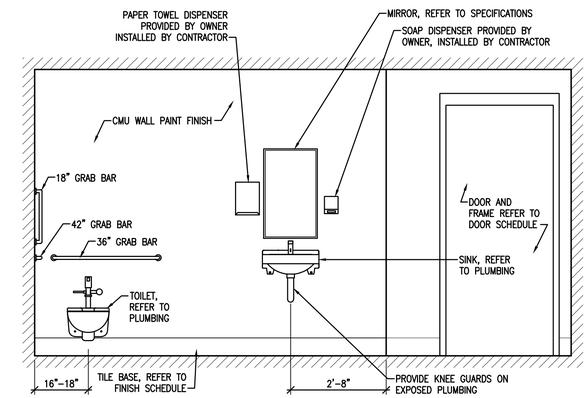

FAMILY / ADA TOILET ROOM ELEVATION

SCALE: 1/2" = 1'-0"

3 / A3.0

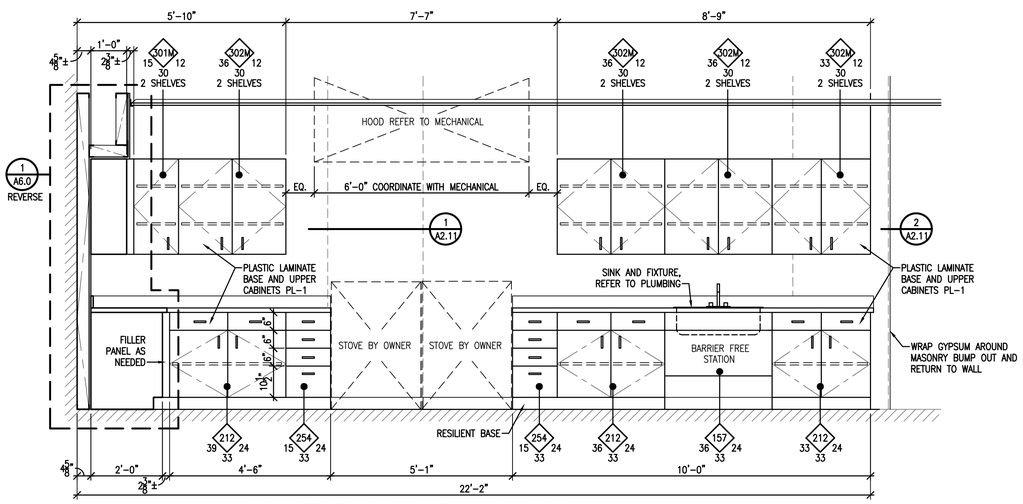

INTERIOR ELEVATION - HOME EC

SCALE: 1/2" = 1'-0"

6 / A3.0

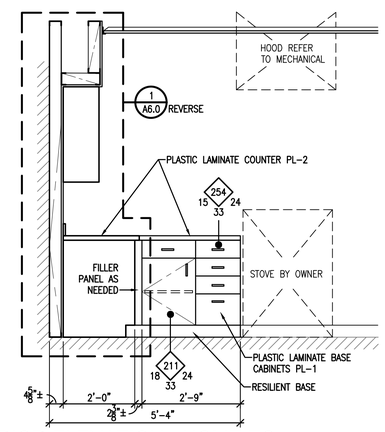

ERIOR ELEVATION - HOME EC

: 1/2" = 1'-0"

5 / A3.0

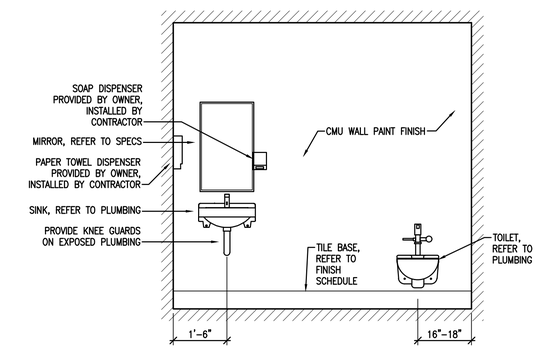

TOILET ROOM ELEVATION

SCALE: 1/2" = 1'-0"

2 / A3.0

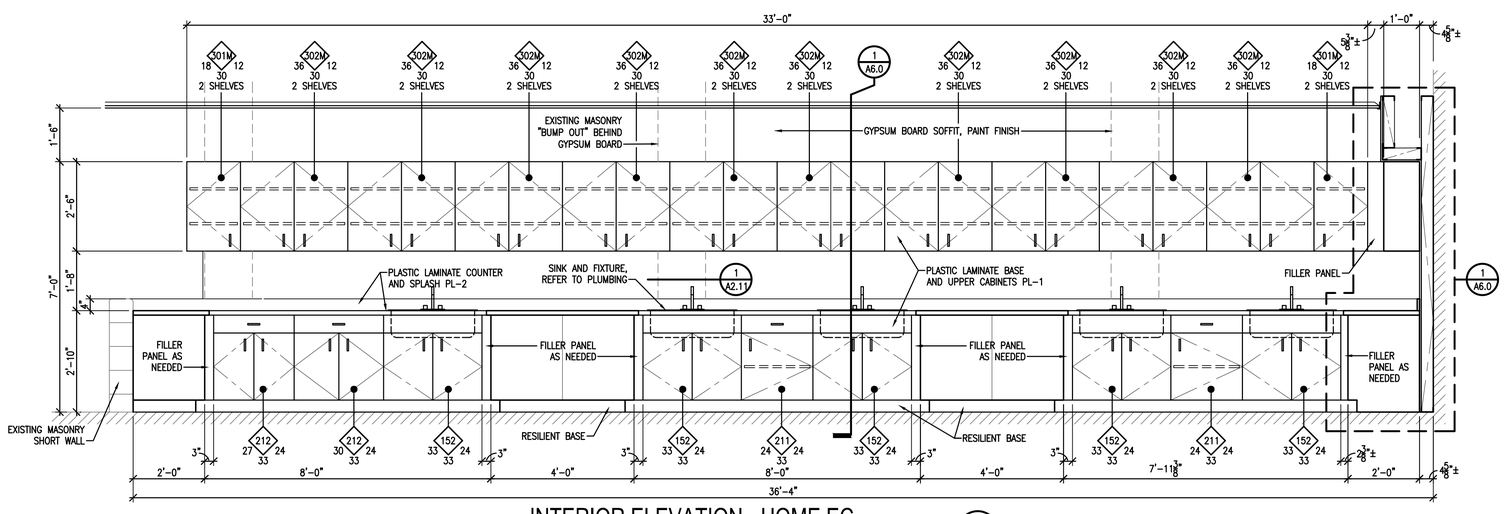

INTERIOR ELEVATION - HOME EC

SCALE: 1/2" = 1'-0"

4 / A3.0

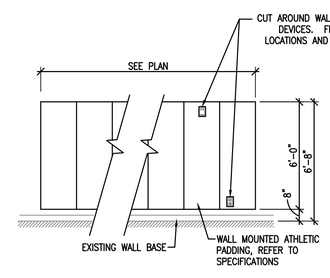

ATHLETIC WALL PADDING

SCALE: 1/4" = 1'-0" MIDDLE SCHOOL GYMNASIUM

1B / A3.0

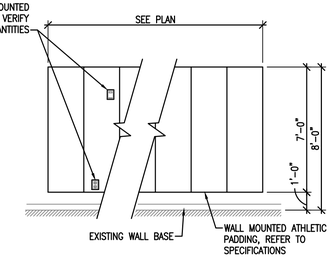

ATHLETIC WALL PADDING

SCALE: 1/4" = 1'-0" HIGH SCHOOL GYMNASIUM

1A / A3.0

MARQUETTE OFFICE:
1021 W. BARGA AVENUE
MARQUETTE, MI 49855
PHONE: (906)228-4493
FAX: (906)228-7524

BIRGHTON OFFICE:
8101 GRAND RIVER AVE., SUITE 600
BRIGHTON, MI 48116
PHONE: (810)229-2701
FAX: (810)229-4787

INTEGRATED DESIGNS INC.
ARCHITECTURE ENGINEERING CONSULTING

HARBOR BEACH COMMUNITY SCHOOLS
PHASE 1 - 2026 ADDITION & RENOVATIONS
HARBOR BEACH, MICHIGAN
PROJECT NO. 24-138

NO.	REVISIONS	DATE
0	FOR CONSTRUCTION	8-26-26

	BY	DATE
DESIGN		
DRAWN		
CHECKED		
APPROVED		

INTERIOR ELEVATIONS

COPYRIGHT © 2026 INTEGRATED DESIGNS INC.

A3.0

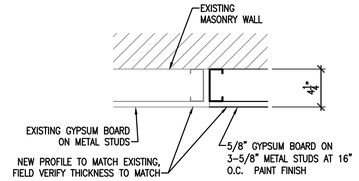

DETAIL 7/A3.1
SCALE: 1-1/2" = 1'-0"

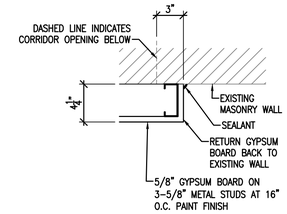

DETAIL 6/A3.1
SCALE: 1-1/2" = 1'-0"

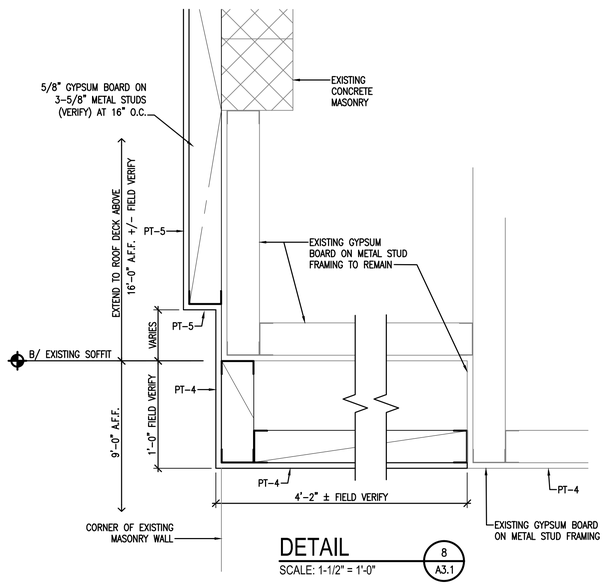

DETAIL 8/A3.1
SCALE: 1-1/2" = 1'-0"

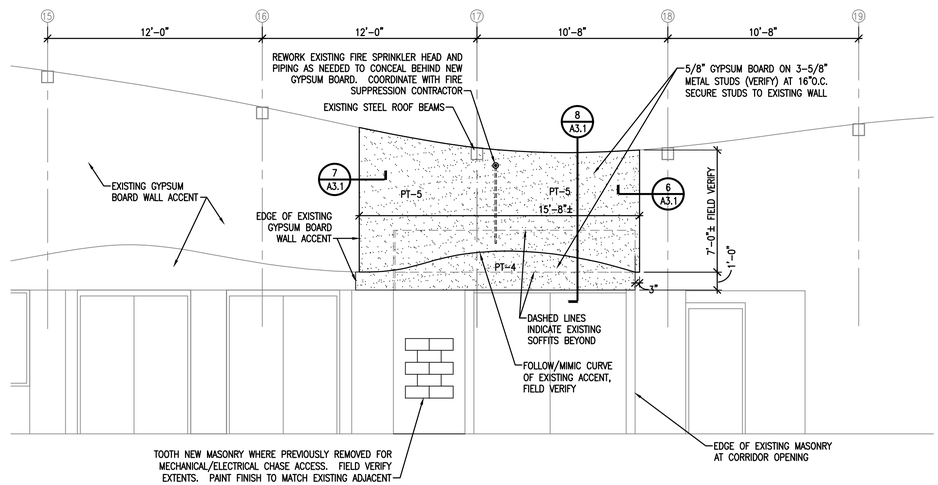

INTERIOR ELEVATION - CORRIDOR WEST 5/A3.1
SCALE: 1/4" = 1'-0"

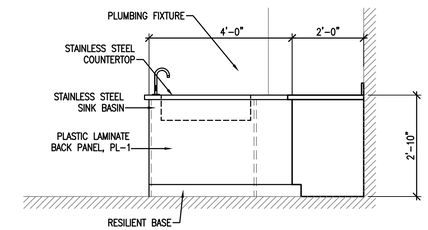

INTERIOR ELEVATION - ART ROOM 3/A3.1
SCALE: 1/2" = 1'-0"

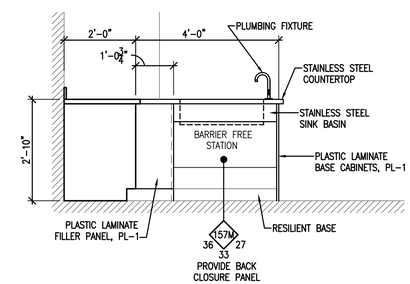

INTERIOR ELEVATION - ART ROOM 2/A3.1
SCALE: 1/2" = 1'-0"

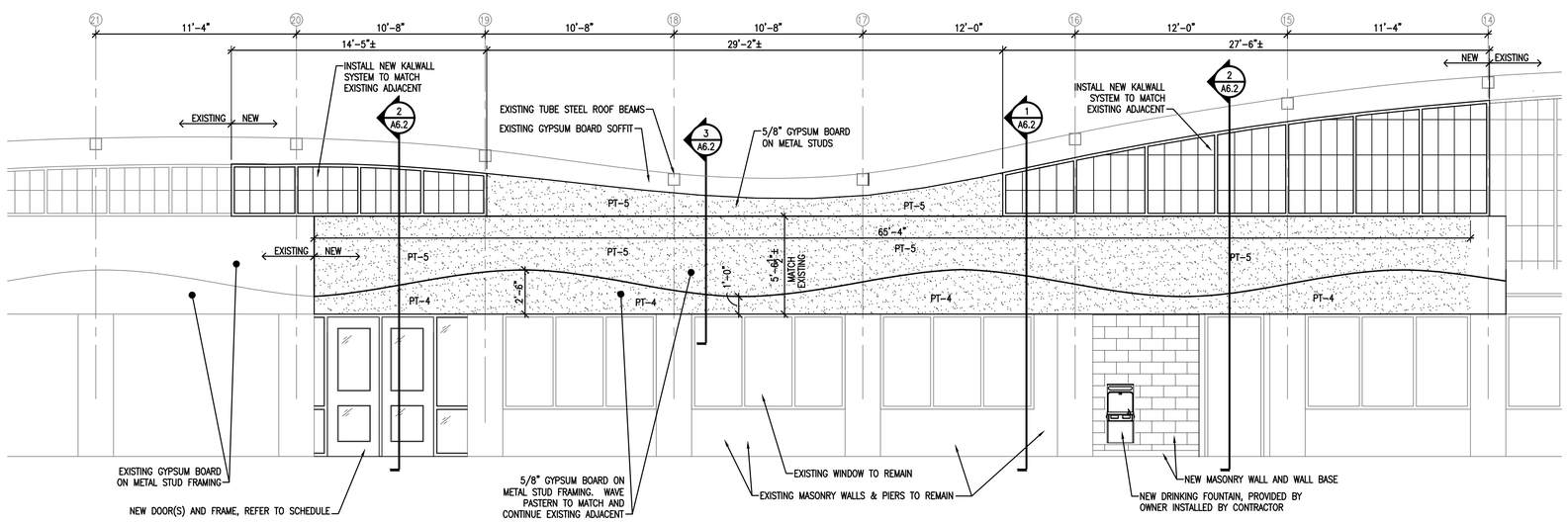

INTERIOR ELEVATION - CORRIDOR EAST 4/A3.1
SCALE: 1/4" = 1'-0"

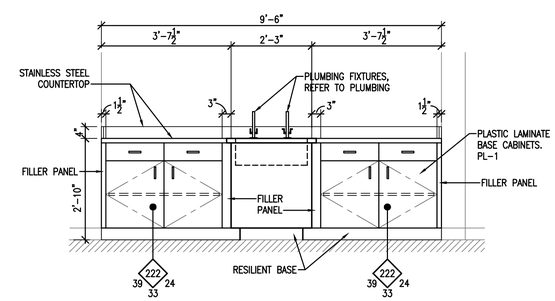

INTERIOR ELEVATION - ART ROOM 1/A3.1
SCALE: 1/2" = 1'-0"

MARQUETTE OFFICE:
1021 W. BARAGA AVENUE
MARQUETTE, MI 49855
PHONE: (906)228-4400
FAX: (906)228-7524

BIRCHTON OFFICE:
6575 CLUBHOUSE DRIVER AVE., SUITE 600
BIRCHTON, MI 48015
PHONE: (810)229-2701
FAX: (810)229-4787

ARCHITECTURE ENGINEERING CONSULTING
INTEGRATED DESIGNS INC.

HARBOR BEACH COMMUNITY SCHOOLS
PHASE 1 - 2026 ADDITION & RENOVATIONS
HARBOR BEACH, MICHIGAN
PROJECT NO. 24-138

NO.	REVISIONS	DATE
0	FOR CONSTRUCTION	8-28-26

BY	DATE
DESIGN	
DRAWN	
CHECKED	
APPROVED	

INTERIOR ELEVATIONS

COPYRIGHT © 2026 INTEGRATED DESIGNS INC.

A3.1

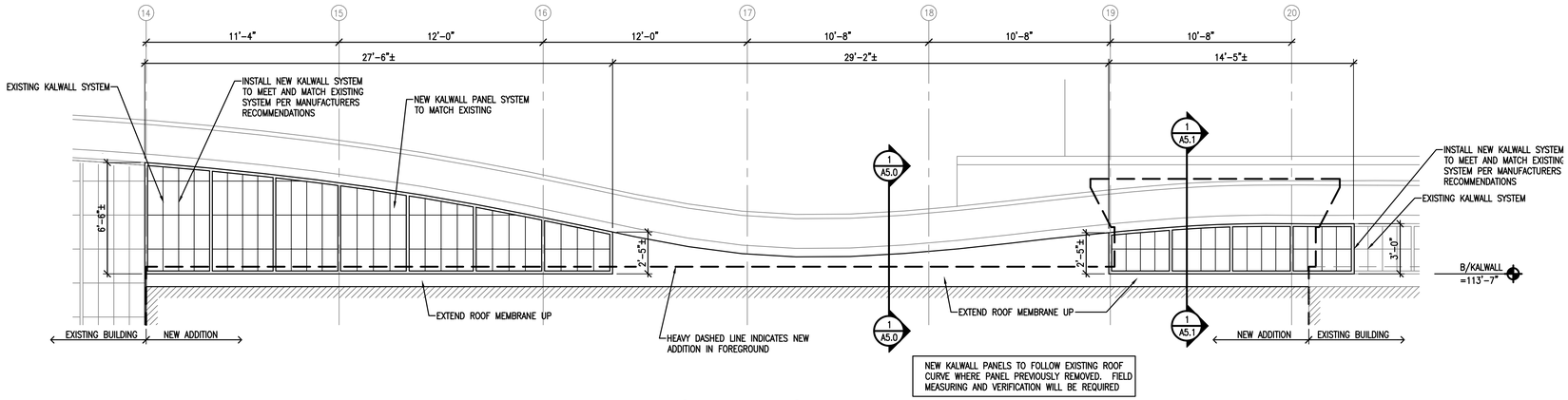

NEW KALWALL PANELS TO FOLLOW EXISTING ROOF CURVE WHERE PANEL PREVIOUSLY REMOVED. FIELD MEASURING AND VERIFICATION WILL BE REQUIRED

EXTERIOR ELEVATION - KALWALL

SCALE: 1/4" = 1'-0"

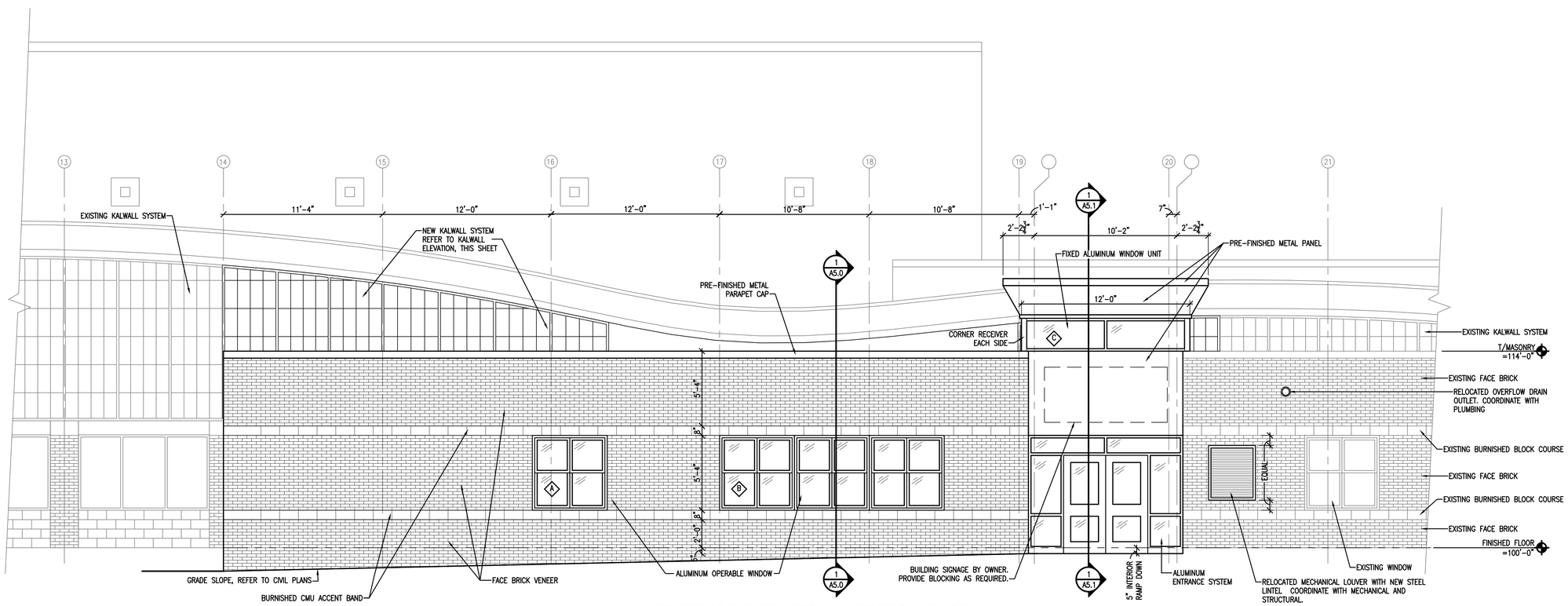

EXTERIOR ELEVATION - ADDITION, EAST

SCALE: 1/4" = 1'-0"

MARQUETTE OFFICE:
1021 W. BARAGA AVENUE
MARQUETTE, MI 49855
PHONE: (906)228-4400
FAX: (906)228-7524

BIRGHTON OFFICE:
601 CLARK STREET
BRIGHTON, MI 48116
PHONE: (810)229-2701
FAX: (810)229-6787

INTEGRATED DESIGNS INC.
ARCHITECTURE
ENGINEERING
CONSULTING

HARBOR BEACH COMMUNITY SCHOOLS
PHASE 1 - 2026 ADDITION & RENOVATIONS
HARBOR BEACH, MICHIGAN
PROJECT NO. 24-138

NO.	REVISIONS	DATE
0	FOR CONSTRUCTION	8-28-26

	BY	DATE
DESIGN	--	--
DRAWN	--	--
CHECKED	--	--
APPROVED	--	--

EXTERIOR ELEVATIONS

COPYRIGHT © 2026 INTEGRATED DESIGNS INC.

A4.0

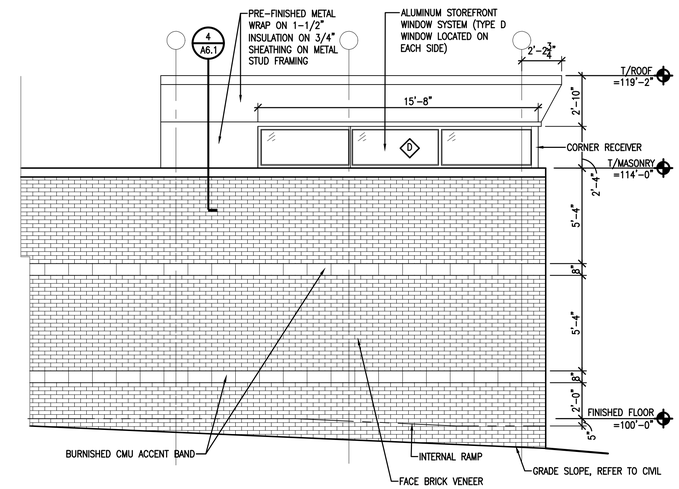

EXTERIOR ELEVATION - ADDITION, SOUTH

SCALE: 1/4" = 1'-0"

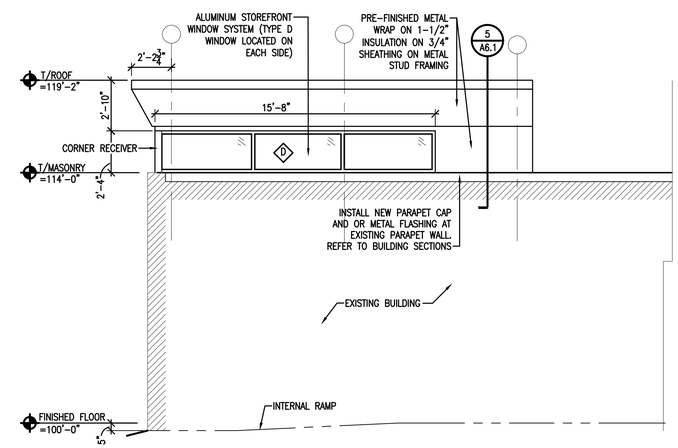

EXTERIOR ELEVATION - ADDITION, NORTH

SCALE: 1/4" = 1'-0"

INTEGRATED DESIGNS INC.
ARCHITECTURE ENGINEERING CONSULTING

MARQUETTE OFFICE:
1021 W. BARAGA AVENUE
MARQUETTE, MI 49855
PHONE: (906)228-4449
FAX: (906)228-7324

BIRGHTON OFFICE:
5577 CLARKSTON RIDGE AVE., SUITE 600
BIRGHTON, MI 48116
PHONE: (810)229-2701
FAX: (810)229-4787

HARBOR BEACH COMMUNITY SCHOOLS
PHASE 1 - 2026 ADDITION & RENOVATIONS
HARBOR BEACH, MICHIGAN
PROJECT NO. 24-138

NO.	REVISIONS	DATE
0	FOR CONSTRUCTION	8-28-26

	BY	DATE
DESIGN	--	--
DRAWN	--	--
CHECKED	--	--
APPROVED	--	--

EXTERIOR ELEVATIONS

COPYRIGHT © 2026 INTEGRATED DESIGNS INC.

A4.1

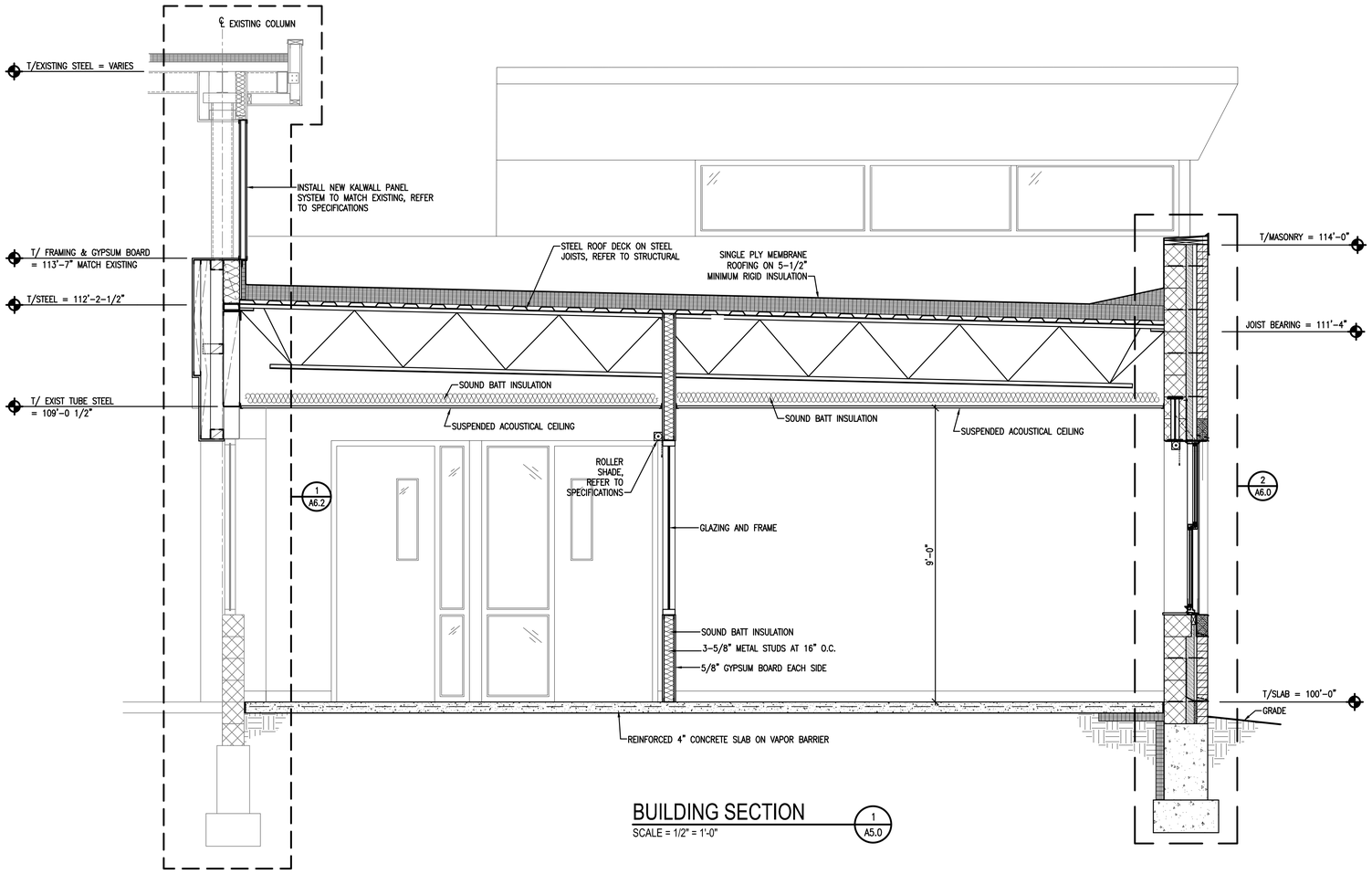

BUILDING SECTION 1 A5.0
SCALE = 1/2" = 1'-0"

INTEGRATED DESIGNS INC.
ARCHITECTURE ENGINEERING CONSULTING
MARQUETTE OFFICE:
1021 W. BARAGA AVENUE
MARQUETTE, MI 49855
PHONE: (906)228-4400
FAX: (906)228-7524
BIRGHTON OFFICE:
5577 CLARKSTON RIVER AVE., SUITE 600
BIRGHTON, MI 48816
PHONE: (810)229-2701
FAX: (810)229-4787

HARBOR BEACH COMMUNITY SCHOOLS
PHASE 1 - 2026 ADDITION & RENOVATIONS
HARBOR BEACH, MICHIGAN
PROJECT NO. 24-138

NO.	REVISIONS	DATE
0	FOR CONSTRUCTION	8-28-26

	BY	DATE
DESIGN	--	--
DRAWN	--	--
CHECKED	--	--
APPROVED	--	--

BUILDING SECTIONS

COPYRIGHT © 2026 INTEGRATED DESIGNS INC.

A5.0

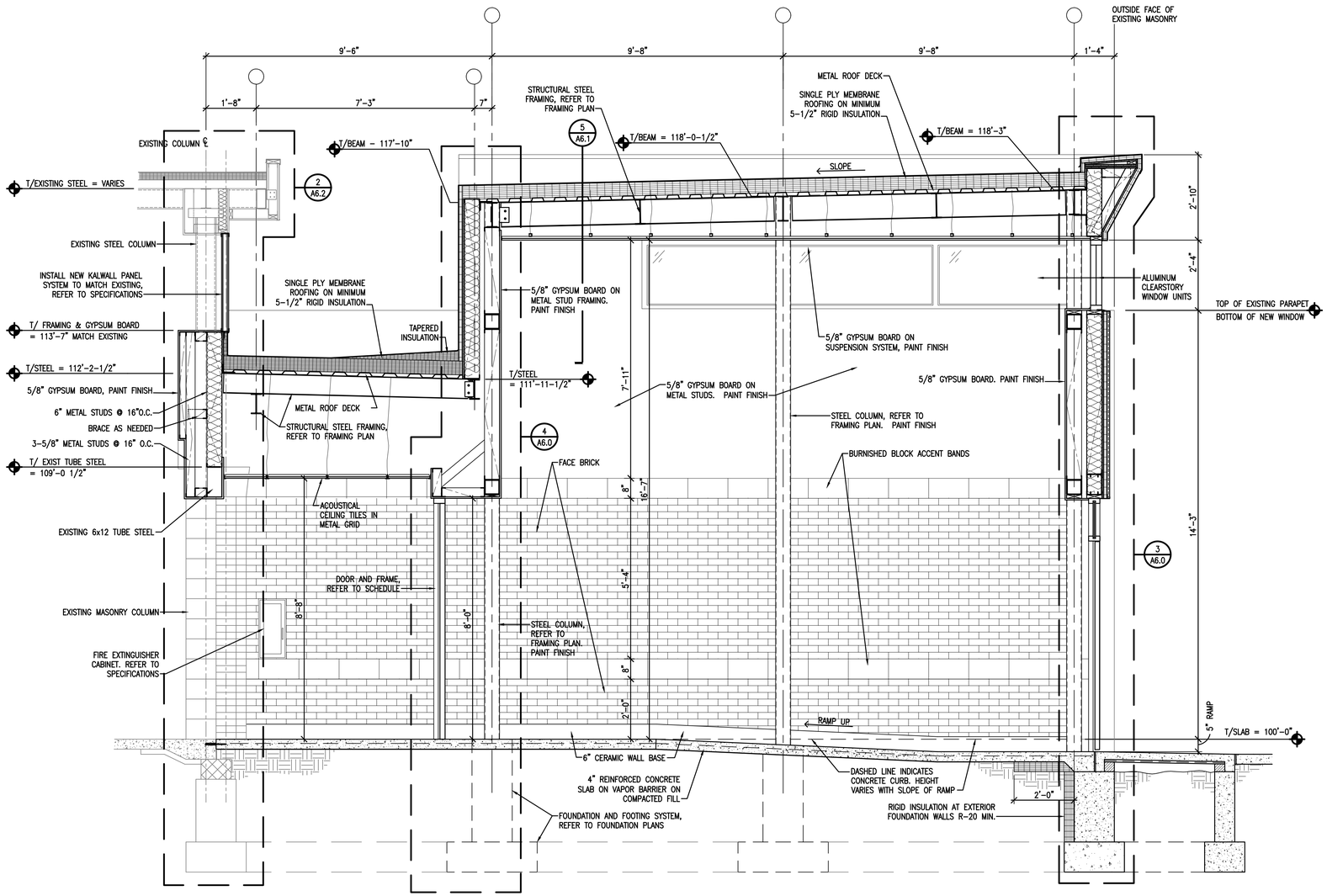

BUILDING SECTION

1 / A5.1

SCALE = 1/2" = 1'-0"

INTEGRATED DESIGNS INC.
ARCHITECTURE ENGINEERING CONSULTING

MARQUETTE OFFICE:
1021 W. BARAGA AVENUE
MARQUETTE, MI 49855
PHONE: (906)228-4483
FAX: (906)228-7524

BIRGHTON OFFICE:
5577 CLARKSTON RIVER AVE., SUITE 600
BIRGHTON, MI 48116
PHONE: (810)229-2701
FAX: (810)229-4787

HARBOR BEACH COMMUNITY SCHOOLS
PHASE 1 - 2026 ADDITION & RENOVATIONS
HARBOR BEACH, MICHIGAN
PROJECT NO. 24-138

NO.	REVISIONS	DATE
0	FOR CONSTRUCTION	8-28-26

	BY	DATE
DESIGN	--	--
DRAWN	--	--
CHECKED	--	--
APPROVED	--	--

BUILDING SECTIONS

COPYRIGHT © 2026 INTEGRATED DESIGNS INC.

A5.1

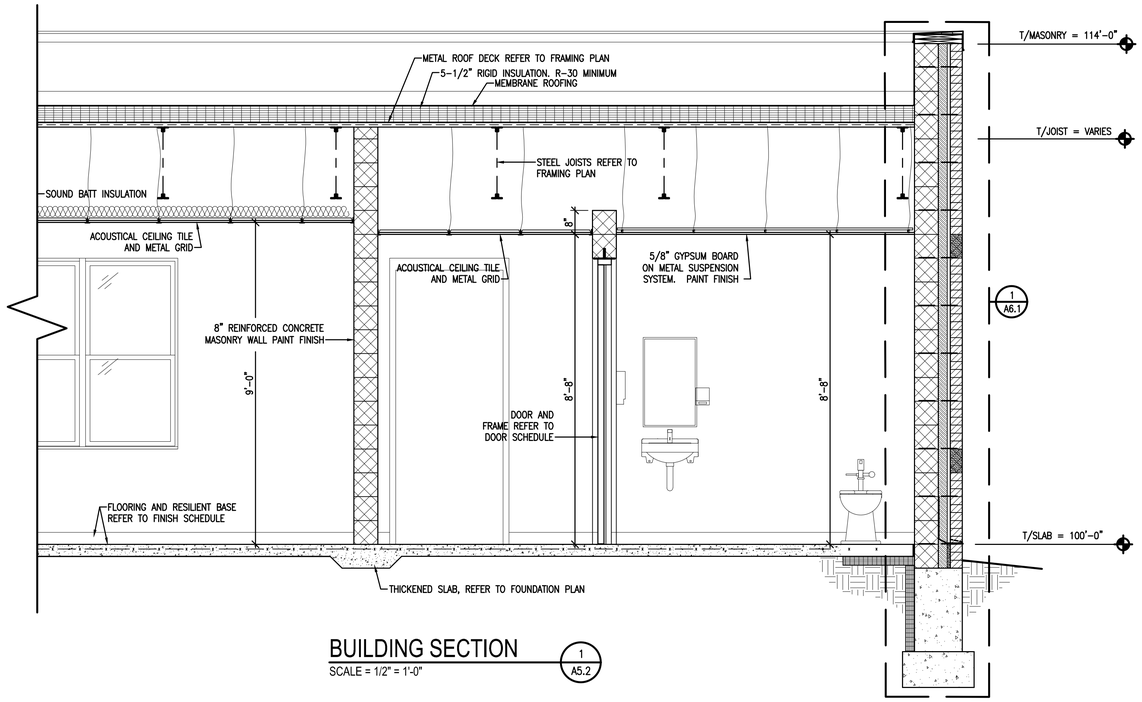

BUILDING SECTION

SCALE = 1/2" = 1'-0"

1 / A5.2

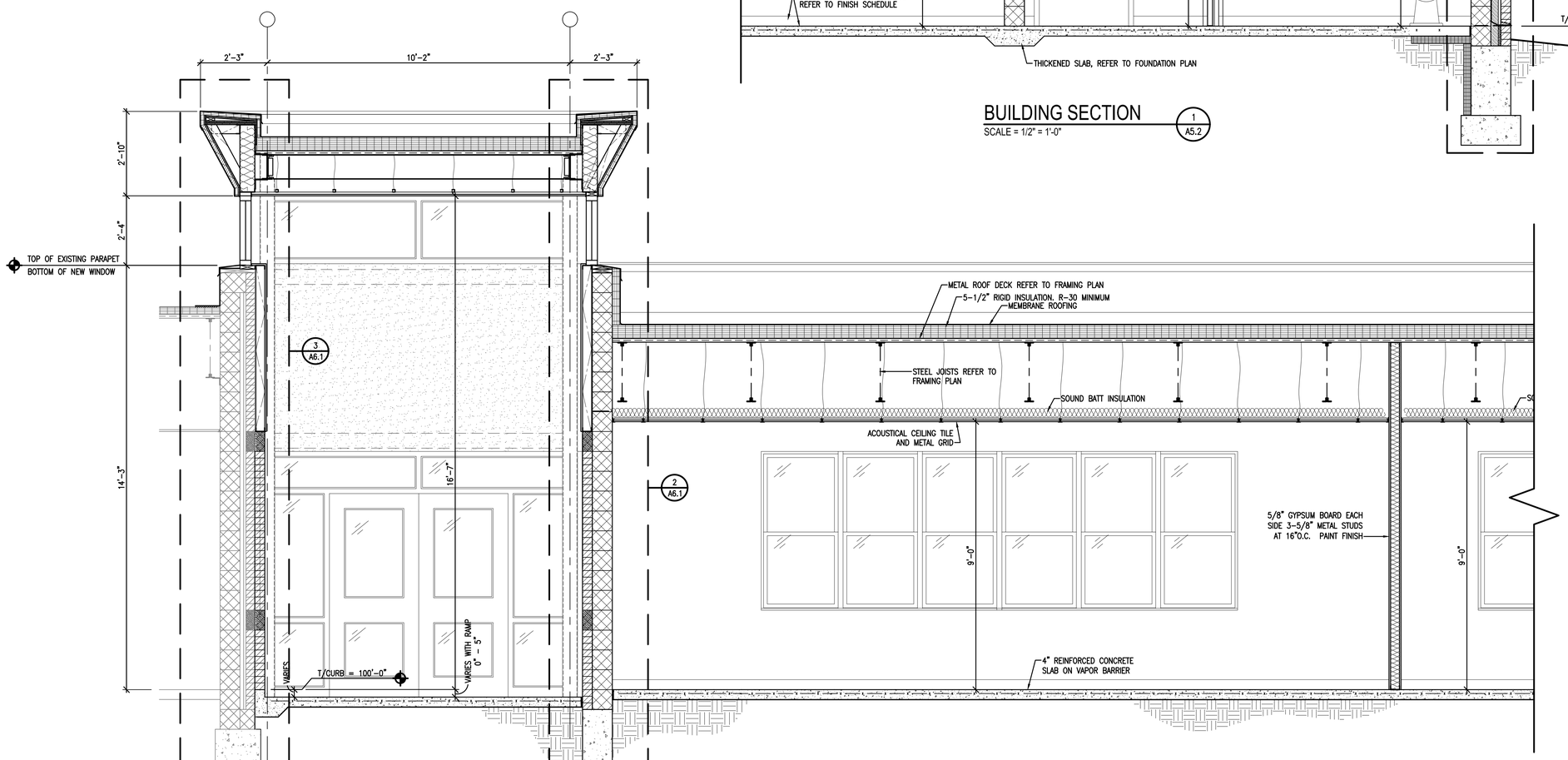

BUILDING SECTION

SCALE = 1/2" = 1'-0"

1 / A5.2

MARQUETTE OFFICE:
1021 W. BARAGA AVENUE
MARQUETTE, MI 49855
PHONE: (906)228-4483
FAX: (906)228-7524

BIRGHTON OFFICE:
6172 GRAND RIVER AVE., SUITE 600
BRIGHTON, MI 48116
PHONE: (810)229-2701
FAX: (810)229-4787

INTEGRATED DESIGNS INC.
ARCHITECTURE
ENGINEERING
CONSULTING

HARBOR BEACH COMMUNITY SCHOOLS
PHASE 1 - 2026 ADDITION & RENOVATIONS
HARBOR BEACH, MICHIGAN
PROJECT NO. 24-138

NO.	REVISIONS	DATE
C	95% OWNER REVIEW	8-3-26

	BY	DATE
DESIGN	---	---
DRAWN	---	---
CHECKED	---	---
APPROVED	---	---

BUILDING SECTIONS

COPYRIGHT © 2026 INTEGRATED DESIGNS INC.

A5.2

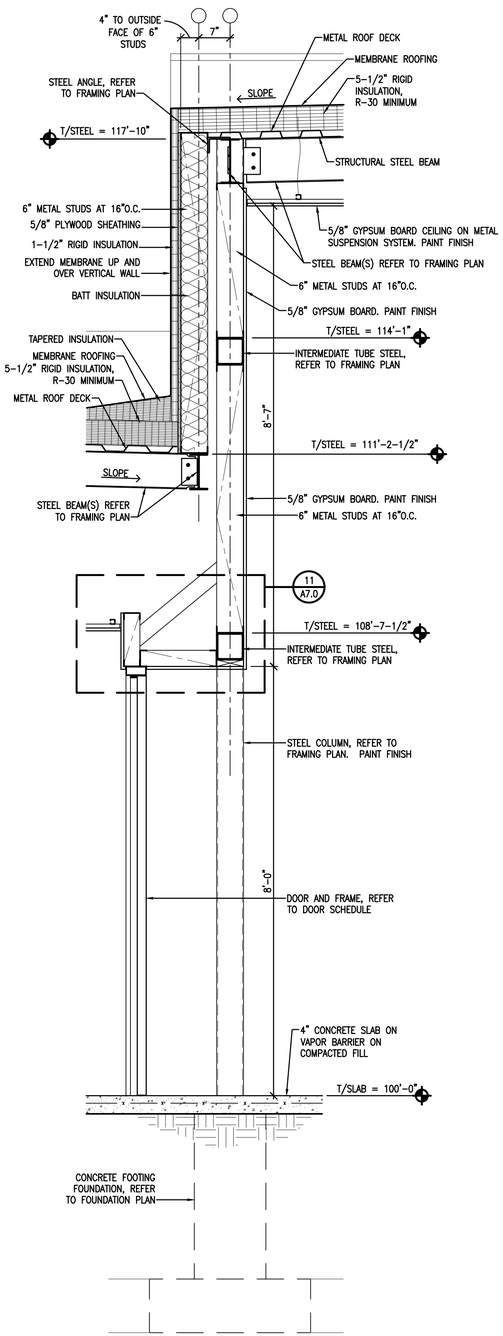

WALL SECTION 4 A6.0
SCALE: 3/4" = 1'-0"

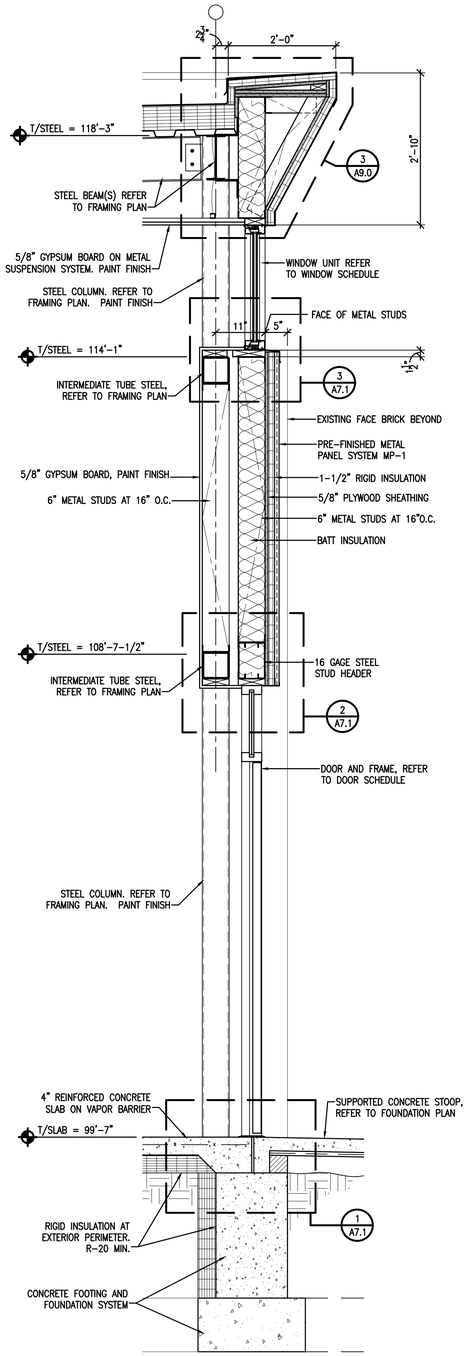

WALL SECTION 3 A6.0
SCALE: 3/4" = 1'-0"

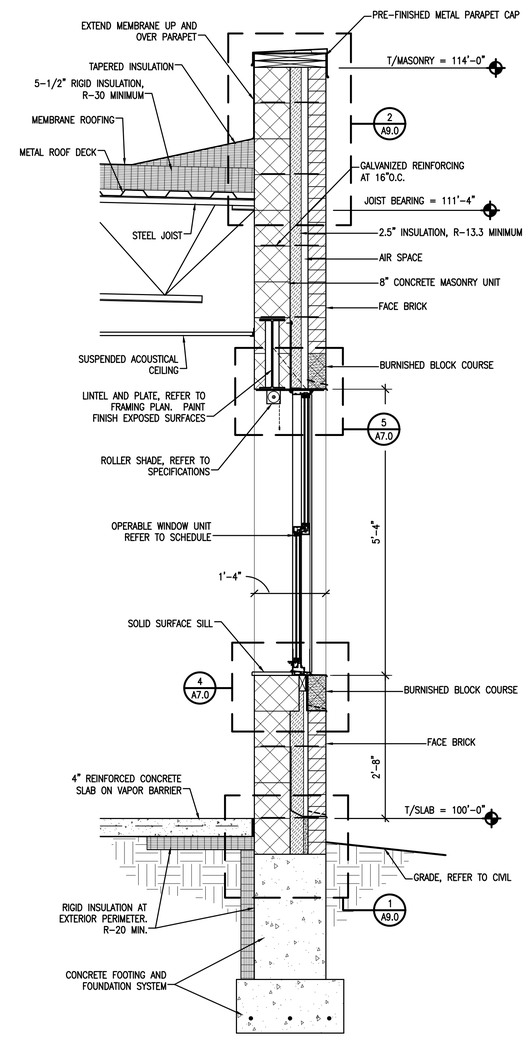

WALL SECTION 2 A6.0
SCALE: 3/4" = 1'-0"

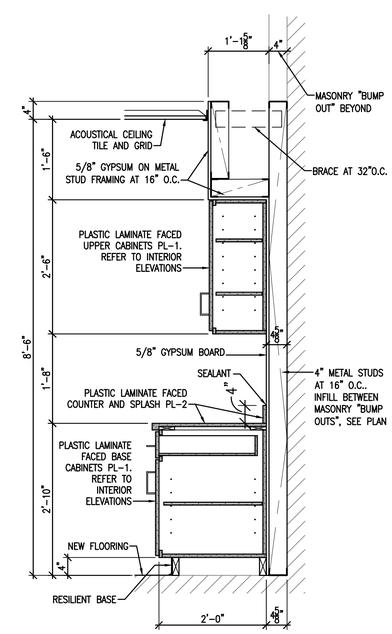

WALL SECTION 1 A6.0
SCALE: 3/4" = 1'-0"

INTEGRATED DESIGNS INC.
ARCHITECTURE ENGINEERING CONSULTING
MARQUETTE OFFICE:
1021 W. BARAGA AVENUE
MARQUETTE, MI 49855
PHONE: (906)228-4483
FAX: (906)228-7524
BIRGHTON OFFICE:
601 CLARK STREET
BRIGHTON, MI 48116
PHONE: (810)229-2701
FAX: (810)229-6787

HARBOR BEACH COMMUNITY SCHOOLS
PHASE 1 - 2026 ADDITION & RENOVATIONS
HARBOR BEACH, MICHIGAN
PROJECT NO. 24-138

NO.	REVISIONS	DATE
0	FOR CONSTRUCTION	8-28-26

	BY	DATE
DESIGN	---	---
DRAWN	---	---
CHECKED	---	---
APPROVED	---	---

WALL SECTIONS

COPYRIGHT © 2026 INTEGRATED DESIGNS INC.

A6.0

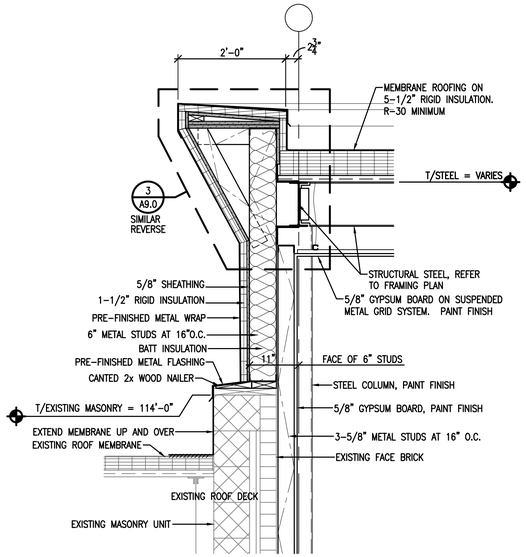

WALL SECTION (PARTIAL) 5 A6.1
SCALE: 3/4" = 1'-0"

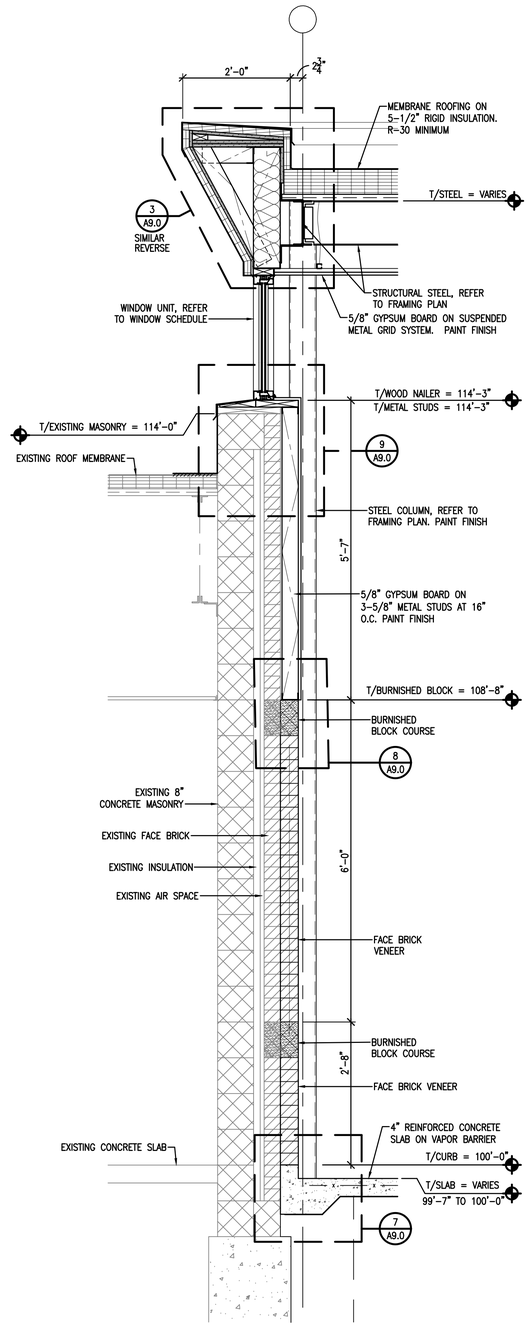

WALL SECTION
SCALE: 3/4" = 1'-0"
3 A6.1

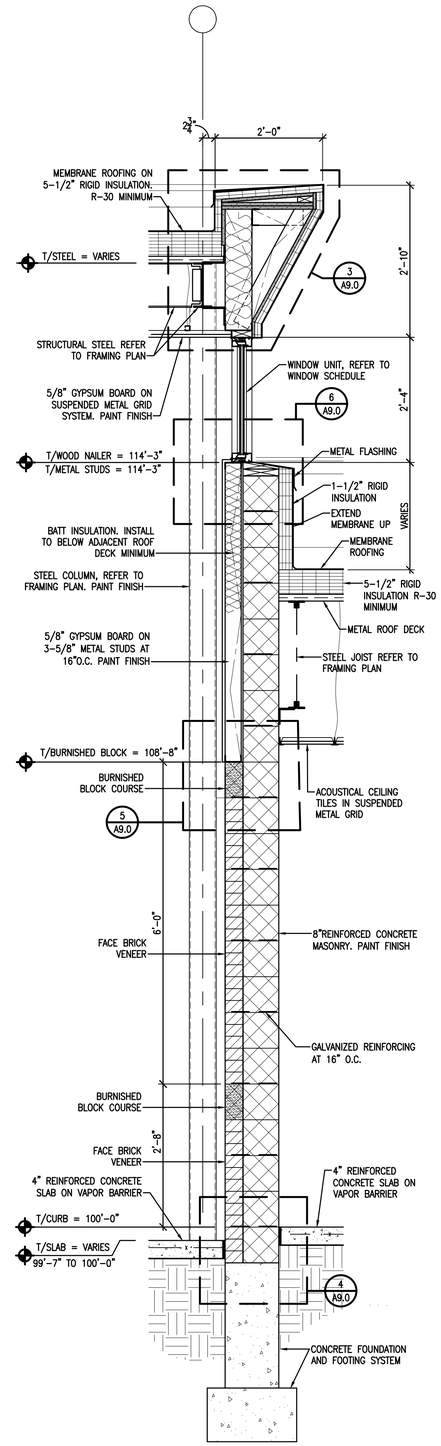

WALL SECTION
SCALE: 3/4" = 1'-0"
2 A6.1

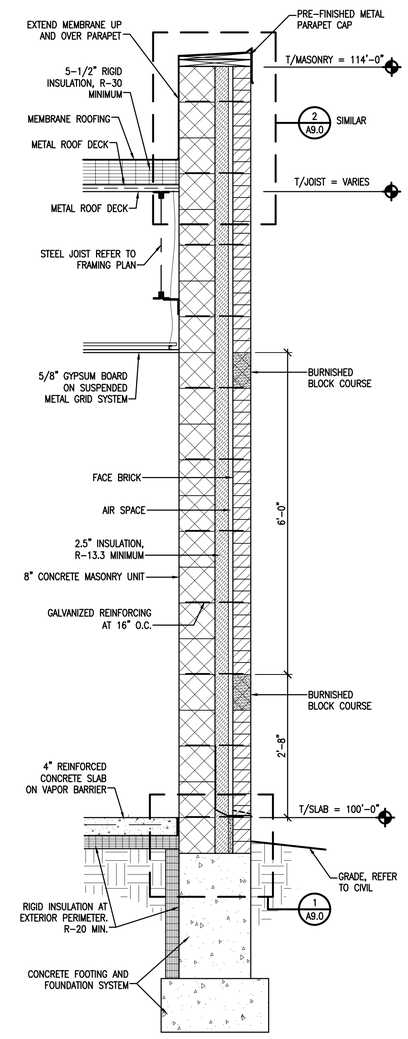

WALL SECTION
SCALE: 3/4" = 1'-0"
1 A6.1

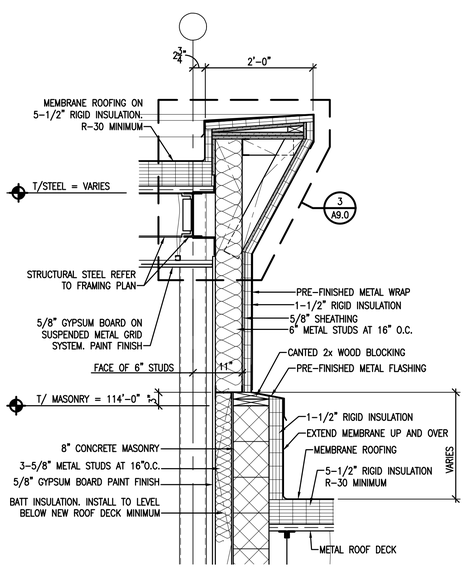

WALL SECTION (PARTIAL) 4 A6.1
SCALE: 3/4" = 1'-0"

ARCHITECTURE ENGINEERING CONSULTING
INTEGRATED DESIGNS INC.
MARQUETTE OFFICE:
1021 W. BARAGA AVENUE
MARQUETTE, MI 49855
PHONE: (906)228-4483
FAX: (906)228-7524
BIRGHTON OFFICE:
601 CLARK STREET
BIRGHTON, MI 48116
PHONE: (810)229-2701
FAX: (810)229-4787

HARBOR BEACH COMMUNITY SCHOOLS
PHASE 1 - 2026 ADDITION & RENOVATIONS
HARBOR BEACH, MICHIGAN
PROJECT NO. 24-138

NO.	REVISIONS	DATE
0	FOR CONSTRUCTION	8-28-26

	BY	DATE
DESIGN		
DRAWN		
CHECKED		
APPROVED		

WALL SECTIONS

COPYRIGHT © 2026 INTEGRATED DESIGNS INC.

A6.1

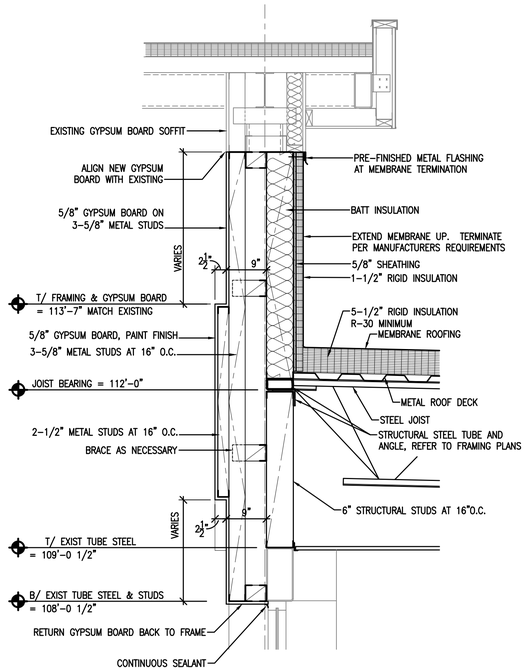

WALL SECTION (PARTIAL)

SCALE: 3/4" = 1'-0"

3 / A6.2

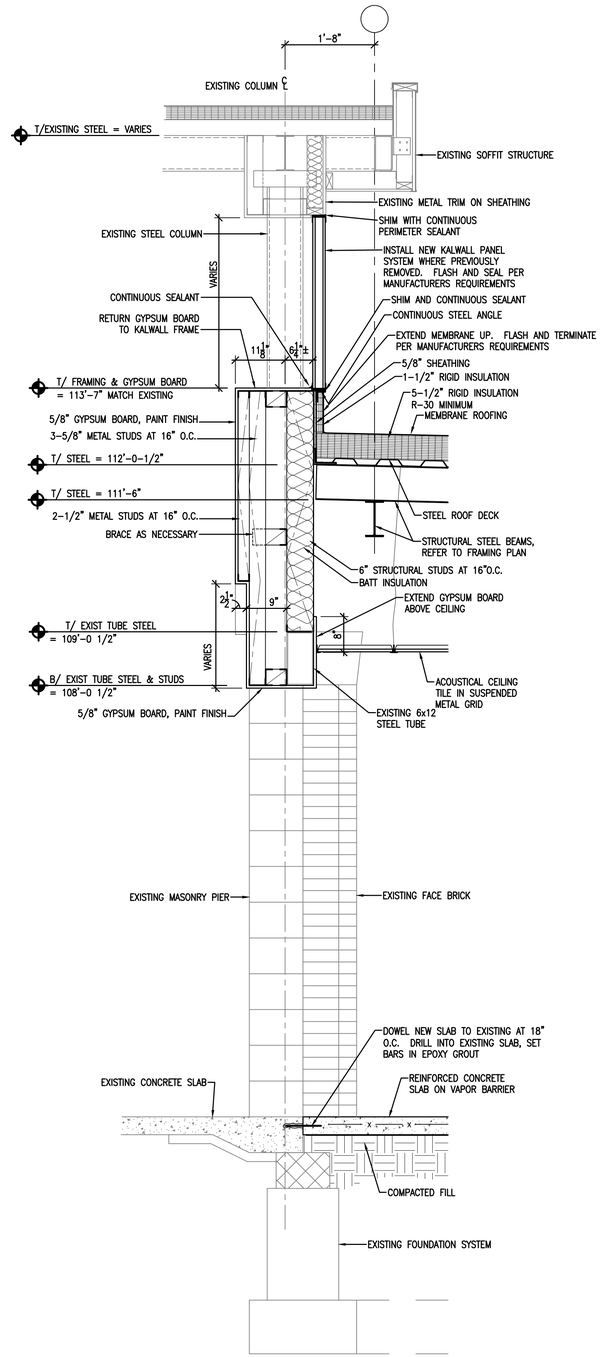

WALL SECTION

SCALE: 3/4" = 1'-0"

2 / A6.2

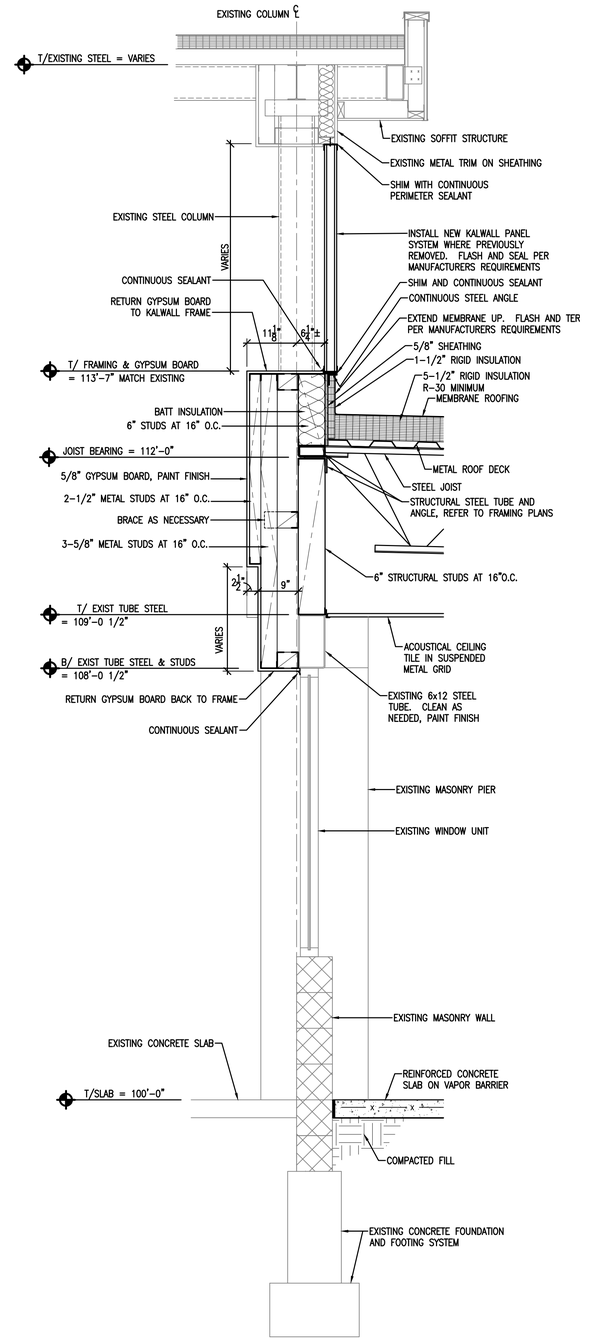

WALL SECTION

SCALE: 3/4" = 1'-0"

1 / A6.2

MARQUETTE OFFICE:
1021 W. BARAGA AVENUE
MARQUETTE, MI 49855
PHONE: (906)228-4449
FAX: (906)228-7524

BIRGHTON OFFICE:
601 CROSSPOINTE AVE., SUITE 600
BIRGHTON, MI 48116
PHONE: (810)229-2701
FAX: (810)229-4787

INTEGRATED DESIGNS INC.
ID ARCHITECTURE ENGINEERING CONSULTING

HARBOR BEACH COMMUNITY SCHOOLS
PHASE 1 - 2026 ADDITION & RENOVATIONS
HARBOR BEACH, MICHIGAN
PROJECT NO. 24-138

NO.	REVISIONS	DATE
0	FOR CONSTRUCTION	8-28-26

	BY	DATE
DESIGN		
DRAWN		
CHECKED		
APPROVED		

WALL SECTIONS

COPYRIGHT © 2026 INTEGRATED DESIGNS INC.

A6.2

FRAME TYPES

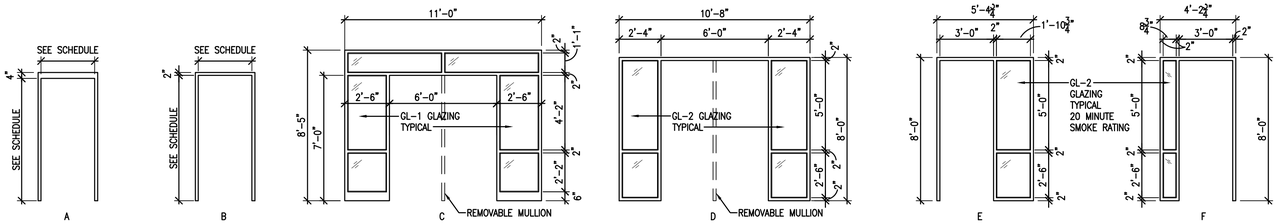

DOOR TYPES

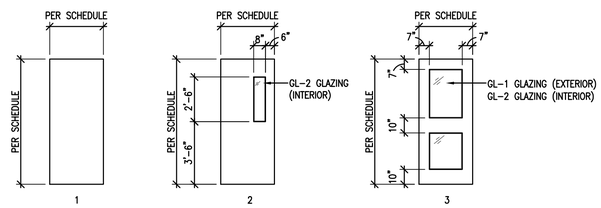

ADDITIONAL NOTES:
- INCLUDE IMPACT RESISTANT SECURITY FILM AT NEW EXTERIOR GLAZING

WINDOW TYPES

ADDITIONAL NOTES:
- INCLUDE ROLLER SHADES WHERE SHOWN ON PLAN
- INCLUDE IMPACT RESISTANT SECURITY FILM AT NEW EXTERIOR WINDOWS

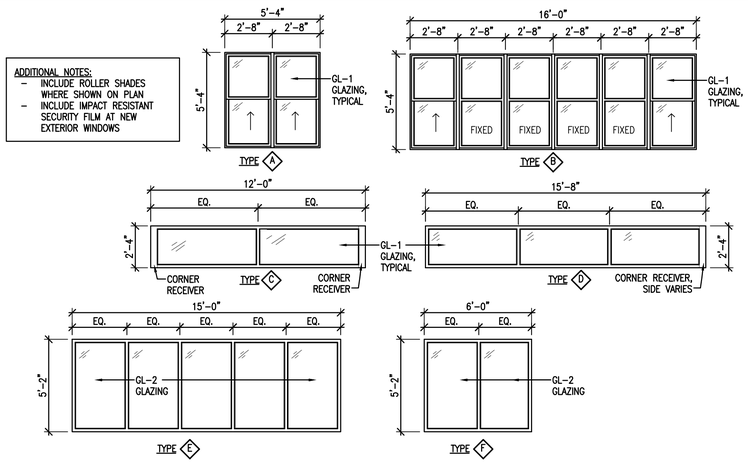

DOOR SCHEDULE

DOOR NUMBER	FRAME		DOOR				HARDWARE SET	DETAIL REFERENCE				REMARKS
	MATERIAL	TYPE	MATERIAL	TYPE	FIRE RATING	SIZE (W x H)		HEAD	JAMB	THRESHOLD	MULLION	
101.1	ALUM	C	ALUM	3		(2) 3'-0" x 7'-10"	07	2/A7.1	9/A7.0 SIM.	1/A7.1		
101.2	ALUM	D	ALUM	3		(2) 3'-0" x 7'-10"	08	11/A7.0	7 & 9/A7.0			
102.1	ALUM	E	WD	2	20 MIN	3'-0" x 7'-8"	05	10/A7.0	7 & 8/A7.0			
102.2	ALUM	F	WD	2	20 MIN	3'-0" x 7'-8"	06	10/A7.0	7 & 8/A7.0			
103	HM	B	WD	2		3'-0" x 7'-8"	04	3/A7.0	3/A7.0			
104	HM	B	WD	2		3'-0" x 7'-8"	03	3/A7.0	3/A7.0			
105.1	HM	A	WD	1		3'-0" x 7'-8"	02	1/A7.0	2/A7.0			
105.2	HM	A	WD	1		3'-0" x 7'-8"	01	1/A7.0 SIM.	2/A7.0 SIM.			
106	HM	A	WD	1		3'-0" x 7'-8"	02	1/A7.0	2/A7.0			
107	HM	A	WD	1		2'-8" x 7'-8"	02	1/A7.0	2/A7.0			
108	HM	A	WD	1		2'-8" x 7'-8"	02	1/A7.0	2/A7.0			

WINDOW SCHEDULE

WINDOW DESIG.	FRAME		WINDOW			DETAIL REFERENCE				REMARKS
	MATERIAL	TYPE	TYPE	GLAZING	SIZE (W x H)	HEAD	JAMB	SILL	MULLION	
A	ALUM	A	HUNG	GL-1	5'-4" X 5'-4"	5/A7.0 SIM.	6/A7.0	4/A7.0		
B	ALUM	B	FIXED/HUNG	GL-1	16'-0" X 5'-4"	5/A7.0	6/A7.0	4/A7.0		
C	ALUM	C	FIXED	GL-1	12'-0" X 2'-4"	3/A9.0	4/A7.1	3/A7.1		
D	ALUM	D	FIXED	GL-1	15'-8" X 2'-4"	3/A9.0	4 & 6/A7.1	6 & 9/A9.0		
E	HM	E	FIXED	GL-1	15'-0" X 5'-2"	3/A7.0 SIM.	3/A7.0 SIM.	3/A7.0 SIM.		*1
F	HM	E	FIXED	GL-1	6'-0" X 5'-2"	3/A7.0 SIM.	3/A7.0 SIM.	3/A7.0 SIM.		*1

CODE TO DOOR / WINDOW SCHEDULE

ALUM	ALUMINUM
HM	HOLLOW METAL, PAINTED
WD	SOLID CORE DOOR, WOOD VENEER FINISH
HUNG	SINGLE HUNG OPERABLE
FIXED	NON OPERABLE
GL-1	CLEAR, INSULATED GLAZING
GL-2	INTERIOR TEMPERED GLAZING

REMARKS

1. PAINT FRAME TO MATCH HOLLOW METAL DOOR FRAMES

GENERAL NOTES TO DOOR SCHEDULE

1. DOOR NUMBERING AND WINDOW DESIGNATIONS: SEE FLOOR PLAN(S) FOR LOCATION OF DOORS AND WINDOWS.
2. FRAME: SEE "CODE TO DOOR/WINDOW SCHEDULES" FOR DEFINITION OF DESIGNATIONS IN MATERIAL COLUMN. SEE "FRAME TYPES" AND "WINDOW TYPES" FOR DESCRIPTION OF DESIGNATION IN FRAME TYPE COLUMN.
3. DOOR: SEE CODE TO "DOOR/WINDOW SCHEDULE" FOR DEFINITION OF DESIGNATIONS IN MATERIAL COLUMN. SEE "DOOR TYPES" FOR DESCRIPTION OF DESIGNATION IN DOOR TYPE COLUMN.
4. FIRE RATING: LABELING INDICATED IS PER NFPA 80. LABELS SHALL BE APPROVED AND PERMANENTLY AFFIXED.
3. SIZE: SIZE IS GIVEN AS WIDTH X HEIGHT.
5. HARDWARE SET: SEE HARDWARE SPECIFICATIONS FOR DESCRIPTIONS.
2. WINDOW: SEE "CODE TO DOOR/WINDOW SCHEDULE" FOR DEFINITION OF DESIGNATIONS IN TYPE AND GLAZING COLUMNS.
3. ALL INTERIOR AND EXTERIOR WINDOWS WITHIN 24" TO THE VERTICAL EDGE OF AN INTERIOR OR EXTERIOR DOOR MUST CONTAIN TEMPERED SAFETY GLAZING.

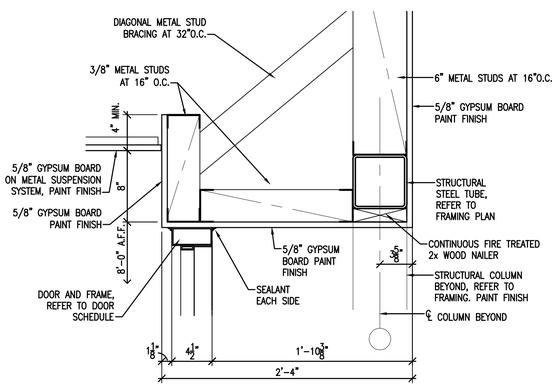

HEAD DETAIL (11 / A7.0)
SCALE: 1-1/2" = 1'-0"

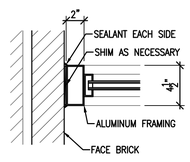

JAMB DETAIL (9 / A7.0)
SCALE: 1-1/2" = 1'-0"

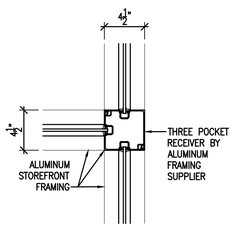

JAMB DETAIL (7 / A7.0)
SCALE: 1-1/2" = 1'-0"

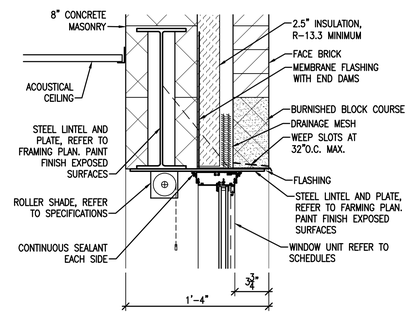

HEAD DETAIL (5 / A7.0)
SCALE: 1-1/2" = 1'-0"

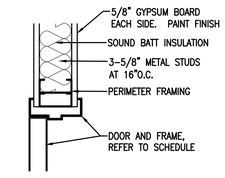

DOOR HEAD & JAMB DETAIL (3 / A7.0)
SCALE: 1-1/2" = 1'-0"

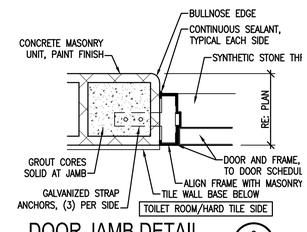

DOOR JAMB DETAIL (2 / A7.0)
SCALE: 1-1/2" = 1'-0"

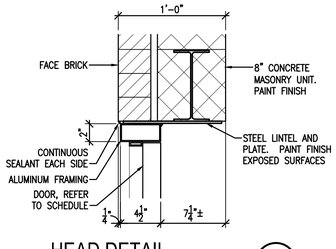

HEAD DETAIL (10 / A7.0)
SCALE: 1-1/2" = 1'-0"

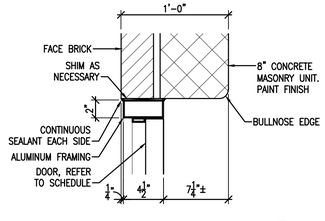

JAMB DETAIL (8 / A7.0)
SCALE: 1-1/2" = 1'-0"

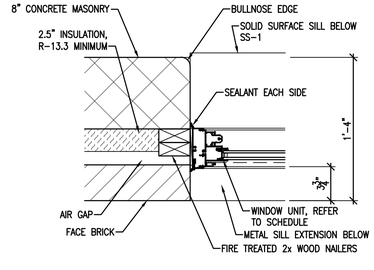

JAMB DETAIL (6 / A7.0)
SCALE: 1-1/2" = 1'-0"

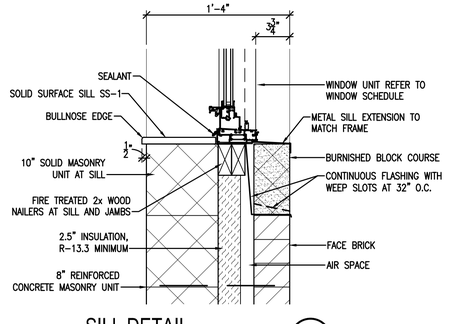

SILL DETAIL (4 / A7.0)
SCALE: 1-1/2" = 1'-0"

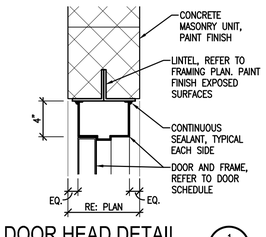

DOOR HEAD DETAIL (1 / A7.0)
SCALE: 1-1/2" = 1'-0"

MARQUETTE OFFICE:
1021 W. BARAGA AVENUE
MARQUETTE, MI 49855
PHONE: (906)228-4483
FAX: (906)228-7524

BIRGHTON OFFICE:
8100 GRAND RIVER AVE., SUITE 600
BRIGHTON, MI 48116
PHONE: (810)229-2701
FAX: (810)229-4787

ARCHITECTURE ENGINEERING CONSULTING
INTEGRATED DESIGNS INC.

HARBOR BEACH COMMUNITY SCHOOLS
PHASE 1 - 2026 ADDITION & RENOVATIONS
HARBOR BEACH, MICHIGAN
PROJECT NO. 24-138

NO.	REVISIONS	DATE
0	FOR CONSTRUCTION	8-28-26

	BY	DATE
DESIGN		
DRAWN		
CHECKED		
APPROVED		

DOOR AND WINDOW SCHEDULES

COPYRIGHT © 2026 INTEGRATED DESIGNS INC.

A7.0

CODE TO FINISHES

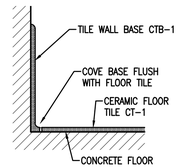

COVE BASE DETAIL
SCALE: 3" = 1'-0"

EXIST EXISTING MATERIAL TO REMAIN
TBD INFORMATION TO BE DETERMINED

CARPET
CPT-1 PENTZ AMPLIFY - 7053T
SIZE: 24"x24" MODULAR TILE
COLOR: 3142 SUNBURST
INSTALLATION PATTERN: ASHLAR

HARD FLOORING
CONC SEALED CONCRETE - REFER TO SPECIFICATION
CT-1 VIRGINIA TILE CROSSVILLE CROSS-COLORS MINGLES PORCELAIN STONE TILE - COLOR: SAND BISQUE 8x8 UNPOLISHED (UPS)
CT-2 VIRGINIA TILE CROSSVILLE CROSS-COLORS MINGLES PORCELAIN STONE TILE - COLOR: SAND BISQUE 8x8 CROSS-SLATE (CS)

WALL BASE
RB-1 4-1/2" RUBBER COVED BASE - JOHNSONITE, BLACK 40
CTB-1 CERAMIC TILE COVED BASE, 6"x12" TO MATCH CT-1 LINE AND COLOR INCLUDE COORDINATING INSIDE/OUTSIDE CORNERS. INSTALL FLUSH WITH FLOOR TILE, REFER TO COVE BASE DETAIL THIS SHEET.

PAINT
SAMPLE AND MATCH EXISTING BUILDING PAINT STANDARDS. COLORS LISTED BELOW ARE TAKEN FROM PRIOR ADDITION RECORD DRAWINGS. FIELD VERIFY COLOR MATCH

PT-1 WALL COLOR - MATCH PITTSBURGH PONY TAIL 315-4
PT-2 DOOR FRAME - MATCH PITTSBURGH FRAGRANT CLOVES 255-7
PT-3 CEILING, FLAT, WHITE
PT-4 PURPLE WALL ACCENT - MATCH PITTSBURGH GREAT GRAPE 445-6
PT-5 YELLOW WALL ACCENT - SAMPLE AND MATCH EXISTING ADJACENT

PLASTIC LAMINATE
PL-1 (COUNTERTOP) PLASTIC LAMINATE - WILSONART, ---
PL-2 (CASEWORK) PLASTIC LAMINATE - WILSONART, ---

CEILING TYPES
ACT-1 2x2 LAY IN TILE & GRID - REFER TO SPECIFICATION
GB-1 5/8" GYPSUM BOARD ON METAL GRID SYSTEM. TAPE, SAND SMOOTH, PAINT FINISH PT-3

SOLID SUFRACE
SS-1 SOLID SURFACE MATERIAL REFER TO SPECIFICATIONS

ROOM FINISH SCHEDULE

REFER TO FLOOR FINISH SHEET A7.1 FOR ADDITIONAL FLOORING SCOPE

ROOM NUMBER	ROOM NAME	CEILING TYPE	FLOOR	BASE	WALLS TYPICAL	WALLS NORTH	WALLS EAST	WALLS SOUTH	WALLS WEST	SIGN TYPE	REMARKS
AREA 'C'											
C101	HOME EC. (344)	ACT1	VCT-1	RB-1		PT-1	PT-1	PT-1	PT-1		
D102	LIVING	ACT1	VCT-1	RB-1		PT-1	PT-1	PT-1	PT-1		
D103	STORAGE	EXIST	VCT-1	RB-1							
ADDITION											
100	PASSAGE	ACT-1	LVT-1	RB-1			PT-1		PT-1		1
101	VESTIBULE	GB-1	CT-2	CTB-1			PT-1		PT-1		1
102	RECEPTION	ACT-1	CPT-1	RB-1		PT-1	PT-1	PT-1	PT-1		
103	CONFERENCE/BOARD	ACT-1	CPT-1	RB-1		PT-1	PT-1	PT-1	PT-1		
104	OFFICE	ACT-1	CPT-1	RB-1		PT-1	PT-1	PT-1	PT-1		
105	FAMILY TOILET	GB-1	CT-1	CTB-1		PT-1	PT-1	PT-1	PT-1		
105A	JANITOR	GB-1	CONC	RB1		PT-1	PT-1	PT-1	PT-1		
106	TOILET	GB-1	CT-1	CTB-1		PT-1	PT-1	PT-1	PT-1		
107	TOILET	GB-1	CT-1	CTB-1		PT-1	PT-1	PT-1	PT-1		
108	TOILET	GB-1	CT-1	CTB-1		PT-1	PT-1	PT-1	PT-1		
109	PASSAGE	ACT-1	LVT-1	RB-1		PT-1	PT-1	PT-1	PT-1		

REMARKS TO FINISH SCHEDULE

1. DO NOT PAINT BRICK VENEER.

GENERAL NOTES TO ROOM FINISH

1. PROVIDE APPROPRIATE TRANSITION STRIPS WHERE DIFFERING FLOOR TILES ABUT.
2. TRANSITION AND REDUCER STRIPS TO MATCH COLOR OF FLOORING, UNLESS OTHERWISE NOTED.
3. TRANSITION ALL FLOOR FINISHES AT CENTER OF DOOR, UNLESS OTHERWISE NOTED.
4. WHERE TWO OR MORE FINISHES APPEAR IN THE FINISH SCHEDULE FOR ONE SURFACE, REFER TO PLANS, DETAILS AND ELEVATIONS FOR ADDITIONAL INFORMATION.
5. RECESSED WIREWAYS, ACCESS PANELS, GRILLES, FIRE EXTINGUISHER CABINETS, ELECTRICAL PANELS AND ALL OTHER SUCH ARCHITECTURAL, ELECTRICAL, AND MECHANICAL DEVICES SHALL BE FINISHED TO MATCH ADJACENT WALL OR CEILING SURFACE, UNLESS OTHERWISE NOTED.
6. ALL PAINT TO BE LOW VOC.
7. ROOM: SEE FLOOR PLAN(S) FOR LOCATION OF ROOM NUMBERS AND NAMES.
8. CEILING TYPE, FLOOR, AND BASE: SEE "CODE TO ROOM FINISH SCHEDULE" FOR DEFINITION OF DESIGNATIONS.
9. WALLS: SEE "CODE TO ROOM FINISH SCHEDULE" FOR DEFINITION OF DESIGNATIONS IN TYPICAL, NORTH, SOUTH, EAST AND WEST COLUMNS.
10. REMARKS: SEE "REMARKS TO FINISH SCHEDULE".

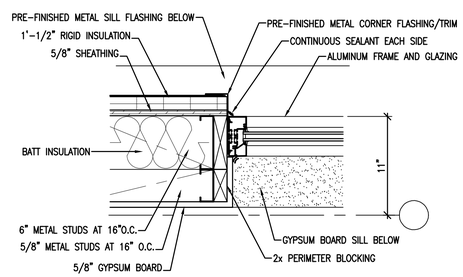

JAMB DETAIL
SCALE: 1-1/2" = 1'-0"
6 / A7.1

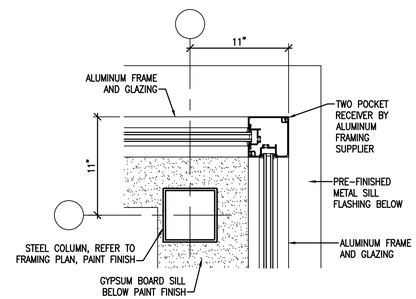

JAMB DETAIL
SCALE: 1-1/2" = 1'-0"
4 / A7.1

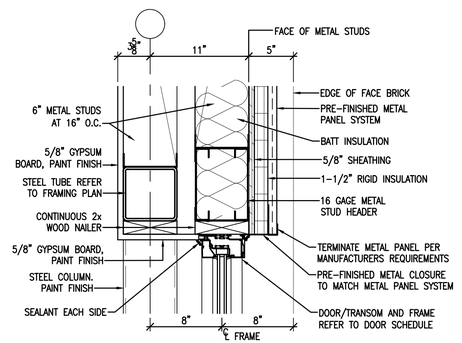

HEAD DETAIL
SCALE: 1-1/2" = 1'-0"
2 / A7.1

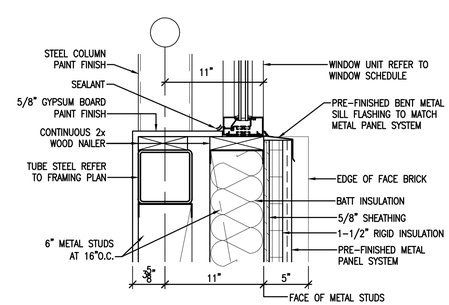

SILL DETAIL
SCALE: 1-1/2" = 1'-0"
3 / A7.1

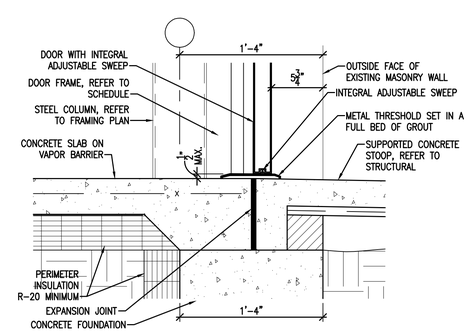

THRESHOLD DETAIL
SCALE: 1-1/2" = 1'-0"
1 / A7.1

MARQUETTE OFFICE:
1021 W. BARAGA AVENUE
MARQUETTE, MI 49855
PHONE: (906)228-4400
FAX: (906)228-7524

BIRMINGHAM OFFICE:
380 S. BOMAN PETERSER AVE., SUITE 600
BIRMINGHAM, MI 48010
PHONE: (810)229-2701
FAX: (810)229-4787

ARCHITECTURE ENGINEERING CONSULTING
INTEGRATED DESIGNS INC.

HARBOR BEACH COMMUNITY SCHOOLS
PHASE 1 - 2026 ADDITION & RENOVATIONS
HARBOR BEACH, MICHIGAN
PROJECT NO. 24-138

NO.	REVISIONS	DATE
0	FOR CONSTRUCTION	8-28-26

	BY	DATE
DESIGN	-	-
DRAWN	-	-
CHECKED	-	-
APPROVED	-	-

ROOM FINISH SCHEDULE

COPYRIGHT © 2026 INTEGRATED DESIGNS INC.

A7.1

FLOOR FINISH PLAN

SCALE: 1" = 25'-0"

CODE TO FLOORING

CT-1 & CTB-1

CERAMIC TILE AND WALL BASE
VIRGINIA TILE CROSSVILLE CROSS-COLORS MINGLES
PORCELAIN STONE TILE
COLOR: SAND BISQUE
8x8 UNPOLISHED (UPS)

CT-2 & CTB-1

CERAMIC TILE AND WALL BASE
VIRGINIA TILE CROSSVILLE CROSS-COLORS
MINGLES PORCELAIN STONE TILE
COLOR: SAND BISQUE
8x8 CROSS-SLATE (CS)

LVT-1 & RB-1

METROFLOR LVT TERRAZZO
DN18064 – CREMA – 24"x24" TILE
4" COVED RUBBER WALL BASE – DISTRICT STANDARD

LVT-2

METROFLOR LVT TERRAZZO
DN18064 – CREMA – 24"x24" TILE
NO NEW WALL BASE, EXISTING BURNISHED BLOCK

CPT-1 & RB-1

PENTZ AMPLIFY
SIZE: 24"x24" MODULAR TILE
COLOR: 3142 SUNBURST
4" COVED RUBBER WALL BASE – DISTRICT STANDARD

CPT-2 & RB-1

CARPET PROVIDED BY OWNER
INSTALLED BY CONTRACTOR
4" COVED WALL BASE – DISTRICT STANDARD

GENERAL NOTES TO ROOM FINISH

1. PROVIDE APPROPRIATE TRANSITION STRIPS WHERE DIFFERING FLOOR TILES ABUT.
2. TRANSITION AND REDUCER STRIPS TO MATCH COLOR OF FLOORING, UNLESS OTHERWISE NOTED.
3. TRANSITION ALL FLOOR FINISHES AT CENTER OF DOOR, UNLESS OTHERWISE NOTED.
4. WHERE TWO OR MORE FINISHES APPEAR IN THE FINISH SCHEDULE FOR ONE SURFACE, REFER TO PLANS, DETAILS AND ELEVATIONS FOR ADDITIONAL INFORMATION.
5. RECESSED WIREWAYS, ACCESS PANELS, GRILLES, FIRE EXTINGUISHER CABINETS, ELECTRICAL PANELS AND ALL OTHER SUCH ARCHITECTURAL, ELECTRICAL, AND MECHANICAL DEVICES SHALL BE FINISHED TO MATCH ADJACENT WALL OR CEILING SURFACE, UNLESS OTHERWISE NOTED.
6. ALL PAINT TO BE LOW VOC.
7. ROOM: SEE FLOOR PLAN(S) FOR LOCATION OF ROOM NUMBERS AND NAMES.
8. CEILING TYPE, FLOOR, AND BASE: SEE "CODE TO ROOM FINISH SCHEDULE" FOR DEFINITION OF DESIGNATIONS.
9. WALLS: SEE "CODE TO ROOM FINISH SCHEDULE" FOR DEFINITION OF DESIGNATIONS IN TYPICAL, NORTH, SOUTH, EAST AND WEST COLUMNS.
10. REMARKS: SEE "REMARKS TO FINISH SCHEDULE".

MARQUETTE OFFICE:
1021 W. BARAGA AVENUE
MARQUETTE, MI 49855
PHONE: (906)228-4449
FAX: (906)228-7524

BIRGHTON OFFICE:
8500 GRAND RIVER AVE., SUITE 600
BRIGHTON, MI 48116
PHONE: (810)229-2701
FAX: (810)229-6787

INTEGRATED DESIGNS INC.
ARCHITECTURE ENGINEERING CONSULTING

HARBOR BEACH COMMUNITY SCHOOLS
PHASE 1 - 2026 ADDITION & RENOVATIONS
HARBOR BEACH, MICHIGAN
PROJECT NO. 24-138

NO.	REVISIONS	DATE
0	FOR CONSTRUCTION	8-28-26

	BY	DATE
DESIGN		
DRAWN		
CHECKED		
APPROVED		

FLOOR FINISH PLAN

COPYRIGHT © 2026 INTEGRATED DESIGNS INC.

A7.2

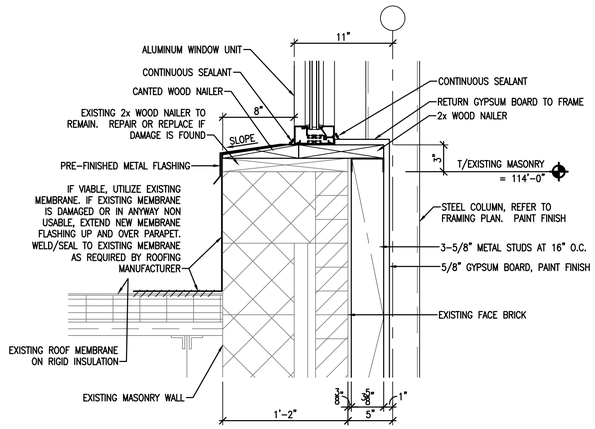

DETAIL 9 / A9.0
SCALE: 1-1/2" = 1'-0"

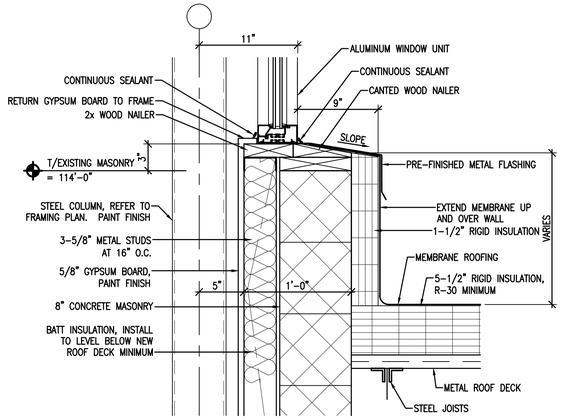

DETAIL 6 / A9.0
SCALE: 1-1/2" = 1'-0"

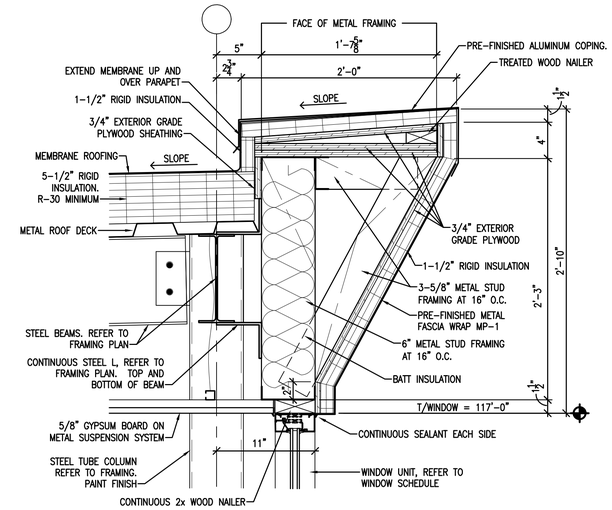

DETAIL 3 / A9.0
SCALE: 1-1/2" = 1'-0"

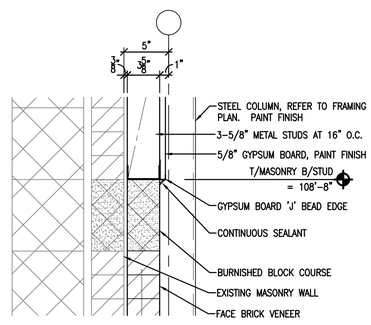

DETAIL 8 / A9.0
SCALE: 1-1/2" = 1'-0"

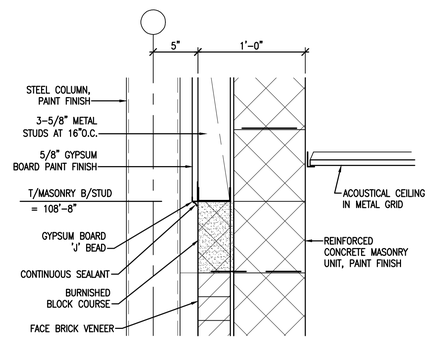

DETAIL 5 / A9.0
SCALE: 1-1/2" = 1'-0"

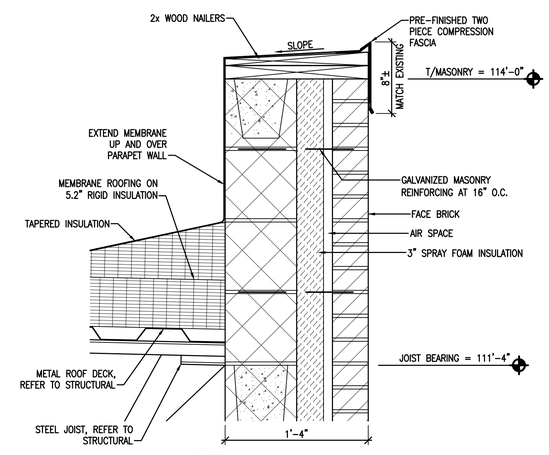

DETAIL 2 / A9.0
SCALE: 1-1/2" = 1'-0"

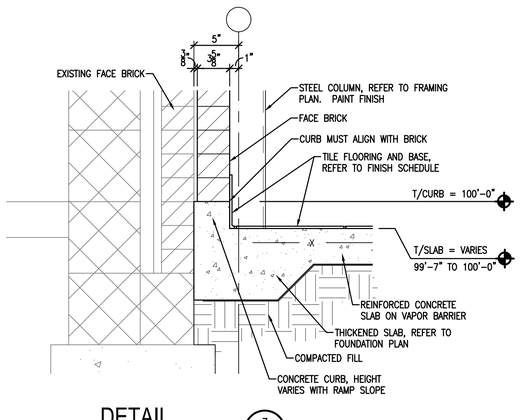

DETAIL 7 / A9.0
SCALE: 1-1/2" = 1'-0"

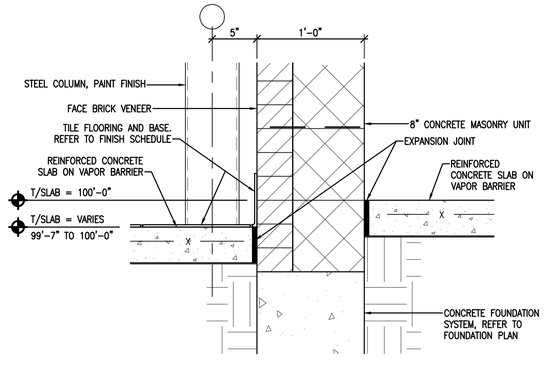

DETAIL 4 / A9.0
SCALE: 1-1/2" = 1'-0"

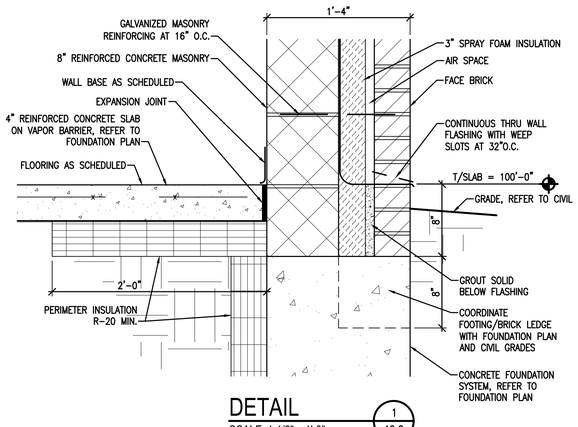

DETAIL 1 / A9.0
SCALE: 1-1/2" = 1'-0"

MARQUETTE OFFICE:
1021 W. BARAGA AVENUE
MARQUETTE, MI 49855
PHONE: (906)228-4449
FAX: (906)228-7524

BIRMINGHAM OFFICE:
251 PEABODY, PETER AVE., SUITE 600
BIRMINGHAM, MI 48012
PHONE: (810)225-2701
FAX: (810)225-4787

INTEGRATED DESIGNS INC.
ARCHITECTURE ENGINEERING CONSULTING

HARBOR BEACH COMMUNITY SCHOOLS
PHASE 1 - 2026 ADDITION & RENOVATIONS
HARBOR BEACH, MICHIGAN
PROJECT NO. 24-138

NO.	REVISIONS	DATE
0	FOR CONSTRUCTION	8-28-26

	BY	DATE
DESIGN		
DRAWN		
CHECKED		
APPROVED		

DETAILS

COPYRIGHT © 2026 INTEGRATED DESIGNS INC.

A9.0

ABBREVIATIONS

ABBREVIATION	DESCRIPTION
AAV	AUTOMATIC AIR VENT / AIR ADMITTANCE VALVE
AD	ACCESS DOOR
AE	AIR EXTRACTOR
AFF	ABOVE FINISHED FLOOR
APD	AIR PRESSURE DROP
ASR	AUTOMATIC SPRINKLER RISER
BD	BACKDRAFT DAMPER
BFP	BACKFLOW PREVENTER
BHP	BRAKE HORSEPOWER
BOD	BOTTOM OF DUCT
BTU	BRITISH THERMAL UNITS
BTUH	BRITISH THERMAL UNITS PER HOUR
BWV	BACKWATER VALVE
CAP	CAPACITY
CAV	CONSTANT AIR VOLUME
CFH	CUBIC FEET PER HOUR
CFM	CUBIC FEET PER MINUTE
CIRC	CIRCULATING
CLG	COOLING
CO	CLEANOUT
CONT	CONTINUATION / CONTINUED
CONV	CONVECTOR
CUH	CABINET UNIT HEATER
CV	CONTROL VALVE
DB	DRY BULB TEMPERATURE
DEG	DEGREE
DDC	DIRECT DIGITAL CONTROL
DN	DOWN
DTC	DRAIN TILE CONNECTION
DWH	DOMESTIC WATER HEATER
(E)	EXISTING
EA / EX	EXHAUST AIR
EA	ENTERING AIR
EDB	ENTERING DRY BULB
EF	EXHAUST FAN
EJ	EXPANSION JOINT
EL	ELEVATION
ELEC	ELECTRICAL
EM	ENERGY MANAGEMENT
ESP	EXTERNAL STATIC PRESSURE
EWB	ENTERING WET BULB
EWH	ELECTRIC WATER HEATER
°F	DEGREES FAHRENHEIT
F	FIRE
FA	FREE AREA (LOUVER) / FACE AREA (COIL)
FD	FLOOR DRAIN
FDC	FIRE DEPARTMENT CONNECTION
FFD	FUNNEL FLOOR DRAIN
FLA	FULL LOAD AMPS
FPM	FEET PER MINUTE
FS	FLOOR SINK
FT	FEET
GAL	GALLONS
GPH	GALLONS PER HOUR
GPM	GALLONS PER MINUTE
GRD	GRILLE, REGISTER, DIFFUSER
HB	HOSE BIBB
HD	HUB DRAIN
HP	HORSEPOWER
HR	HOUR
HTG	HEATING
HYD	HYDRANT
HZ	HERTZ
ID	INSIDE DIAMETER
IE	INVERT ELEVATION
IN	INCHES

ABBREVIATIONS CONT.

ABBREVIATION	DESCRIPTION
INV	INVERT
ISP	INTERNAL STATIC PRESSURE
IW	INDIRECT WASTE
KW	KILOWATT
LAT	LEAVING AIR TEMPERATURE
LAV	LAVATORY
LBS / HR	POUNDS PER HOUR
LDB	LEAVING DRY BULB TEMPERATURE
LRA	LOCKED ROTOR AMPS
LWB	LEAVING WET BULB TEMPERATURE
MAV	MANUAL AIR VENT
MAX	MAXIMUM
MBH	1,000 BRITISH THERMAL UNITS PER HOUR
MCA	MINIMUM CIRCUIT AMPACITY
MECH	MECHANICAL
MFR	MANUFACTURER
MH	MANHOLE
MIN	MINUMUM
MISC	MISCELLANEOUS
MOD	MOTOR OPERATED DAMPER (AUTOMATIC)
MOP	MAXIMUM OVER-CURRENT PROTECTION
N.C.	NOISE CRITERIA
NC	NORMALLY CLOSED
NIC	NOT IN CONTRACT
NO	NORMALLY OPEN
NOM	NOMINAL
OA	OUTSIDE AIR
OBD	OPPOSED BLADE DAMPER
OC	ON CENTER
OD	OUTSIDE DIAMETER
OED	OPEN ENDED DUCT
ORS	OVERFLOW ROOF SUMP
OS&Y	OUTSIDE SCREW AND YOKE
PD	PRESSURE DROP (FEET OF WATER)
PRV	PRESSURE REDUCING VALVE
PSIA	POUNDS PER SQUARE INCH - ABSOLUTE
PSIG	POUNDS PER SQUARE INCH - GAUGE
PT	PRESSURE / TEMPERATURE PORT
RA	RETURN AIR
RD	ROOF DRAIN
REL. A	RELIEF AIR
REQ	REQUIRE
RPM	REVOLUTIONS PER MINUTE
RPZ	REDUCED PRESSURE ZONE
SA	SUPPLY AIR
SH	SHOWER
SP	STATIC PRESSURE
SQFT / SF	SQUARE FOOT / SQUARE FEET
SS	SERVICE SINK
T	TEMPERATURE
T&P	TEMPERATURE AND PRESSURE
TS	TOTAL STATIC
TYP	TYPICAL
UG	UNDERGROUND
UL	UNDERWRITERS LABORATORIES
UNO	UNLESS NOTED OTHERWISE
UR	URINAL
VD	VOLUME DAMPER (MANUALLY ADJUSTABLE)
VFD	VARIABLE FREQUENCY DRIVE
VTR	VENT THRU ROOF
W	WASTE
W&V	WASTE & VENT
WB	WET BULB TEMPERATURE
WC	WATER CLOSET
WG	WATER GAUGE
WH	WATER HEATER

MECHANICAL SYMBOLS

SYMBOL	DESCRIPTION
	RECTANGULAR TAKE-OFF
	ROUND TAKE-OFF
	RECTANGULAR ELBOW (WITH TURNING VANES)
	RECTANGULAR RADIUS ELBOW
	ROUND RADIUS ELBOW
	RECTANGULAR ELBOW UP
	ROUND ELBOW UP
	RECTANGULAR ELBOW DOWN
	ROUND ELBOW DOWN
	CONCENTRIC TRANSITION
	ECCENTRIC TRANSITION
R	INCLINED RISE IN DIRECTION OF AIRFLOW
D	INCLINED DROP IN DIRECTION OF AIRFLOW
	FLEXIBLE CONNECTION
	FLEXIBLE DUCT CONNECTION
	SUPPLY DIFFUSER
	LINEAR SLOT DIFFUSER
	RETURN DIFFUSER
	EXHAUST DIFFUSER
	TRANSFER GRILLE
	SUPPLY DUCT CROSS SECTION
	RETURN DUCT CROSS SECTION
	FIRE DAMPER
	SMOKE DAMPER
	COMBINATION FIRE / SMOKE DAMPER
	VOLUME DAMPER (MANUALLY ADJUSTABLE)
M	MOTORIZED DAMPER
SD	SMOKE DETECTOR
CO_2	CARBON DIOXIDE SENSOR
T	THERMOSTAT OR TEMPERATURE SENSOR
H	HUMIDISTAT OR HUMIDITY SENSOR
S	SENSOR
	RETURN OR EXHAUST / SUPPLY AIR FLOW
DG	DOOR GRILLE
UC 1"	UNDERCUT DOOR 1"

PIPING SYMBOLS

SYMBOL	DESCRIPTION
	PIPE ELBOW UP
	PIPE ELBOW DOWN
	PIPE TEE TOWN
	DIRECTION OF FLOW
	UNION
	STRAINER
	REDUCER
	EXPANSION JOIN
	FLEXIBLE CONNECTION
	PIPE ANCHOR
	PIPE GUIDE
	PIPE CAP OR PLUG
	GATE VALVE
	PUMP
	GLOBE VALVE
	BALL VALVE
	BUTTERFLY VALVE
	ANGLE VALVE
	CHECK VALVE
	PLUG VALVE
	OUTSIDE SCREW AND YOKE VALVE (OS&Y)
	THERMOMETER
	PRESSURE REGULATING VALVE
	SOLENOID VALVE
	CONTROL VALVE (2-WAY / 3-WAY)
	CENTRIFUGAL FAN
	FLOOR DRAIN
	FLOOR DRAIN
	ROOF SUMP / DRAIN
FCO	FLOOR CLEAN OUT
CO	CLEAN OUT (IN LINE)
WCO	WALL CLEAN OUT
M	WATER METER ASSEMBLY
	HOSE BIBB / WALL HYDRANT
	SPRINKLER HEAD (PENDANT)
	SPRINKLER HEAD (UPRIGHT)
	SPRINKLER HEAD (SIDE WALL)
IN./FT.	SLOPE
FS	FLOW SWITCH
	SIAMESE CONNECTION (YARD)
	SIAMESE CONNECTION (WALL MOUNTED)
	COMBINATION FLOW MEASURING AND BALANCING DEVICE
	AUTOMATIC AIR VENT
	MANUAL AIR VENT
	HOSE END VALVE
	SAFETY RELIEF VALVE
	PRESSURE GAUGE
	BALANCING COCK
	STRAINER W/ BLOW OFF VALVE

DRAWING NOTATION

SYMBOL	DESCRIPTION
0	KEY NOTE
RTU-1	EQUIPMENT DESIGNATION AND NUMBER
A NECK SIZE CFM	AIR TERMINAL TAG
A 0 GPM	BASEBOARD RADIATION TAG (TYPE OVER LENGTH OF ELEMENT)
	EXISTING DEVICES OR EQUIPMENT
	NEW OR MODIFIED DEVICES OR EQUIPMENT
0	REVISIONS
	POINT OF NEW CONNECTION TO EXISTING
	SUPPLY DIFFUSER, DARKENED AREAS SIGNIFY BLANKED OFF SECTIONS
NAME 000	ROOM NAME AND NUMBER
0 M0.0	SECTION CUT (NUMBER OF SECTION - TOP / CORRESPONDING SHEET - BOTTOM)
0 M0.0	DETAIL (NUMBER OF DETAIL - TOP / CORRESPONDING SHEET - BOTTOM)
0 A0.0	ENLARGED VIEW (NUMBER OF VIEW - TOP / CORRESPONDING SHEET - BOTTOM)

PIPING LEGEND

SYMBOL	DESCRIPTION
AW	ACID WASTE
CHWR OR CR	CHILLED OR CONDENSER WATER RETURN
CHWS OR CS	CHILLED OR CONDENSER WATER RETURN
CA	COMPRESSED AIR
D	CONDENSATE / EQUIPMENT DRAIN
CW	DOMESTIC COLD WATER
HW	DOMESTIC HOT WATER
HWR	DOMESTIC HOT WATER RECIRC.
DT	DRAIN TILE
F	FIRE PROTECTION
HWR OR HPR	HEATING WATER OR HEAT PUMP RETURN
HWS OR HPS	HEATING WATER OR HEAT PUMP SUPPLY
HGB	HOT GAS BYPASS
MA	MEDICAL AIR
G	NATURAL GAS
N	NATURAL GAS
O	OXYGEN GAS
LP	PROPANE
RL	REFRIGERANT LIQUID
RS	REFRIGERANT SUCTION
SAN	SANITARY WASTE
SAN	SANITARY WASTE UNDERGROUND
STEAM	STEAM
COND	STEAM CONDENSATE
ST	STORM SEWER
ST	STORM SEWER UNDERGROUND
T	TEMPERED WATER
VAC	VACUUM
V	VENT

INTEGRATED DESIGNS INC.
ARCHITECTURE ENGINEERING CONSULTING

MARQUETTE OFFICE:
1021 W. BARAGA AVENUE
MARQUETTE, MI 49855
PHONE: (906)228-4449
FAX: (906)228-7524

BIRCHTON OFFICE:
5725 CLAY AVENUE SUITE 600
BIRCHTON, MI 48319
PHONE: (810)229-2701
FAX: (810)229-6787

HARBOR BEACH COMMUNITY SCHOOLS
PHASE 1 - 2026 ADDITION & RENOVATIONS
HARBOR BEACH, MICHIGAN
PROJECT NO. 24-138

NO.	REVISIONS	DATE
B	DESIGN DEVELOPMENT	06.03.26
C	95% OWNER REVIEW	08.03.26
0	FOR CONSTRUCTION	08.28.26

	BY
DESIGN	CRP
DRAWN	CRP
CHECKED	SLB
APPROVED	SLB

MECHANICAL & PLUMBING
SYMBOLS & LEGENDS

MP0.0

COPYRIGHT © 2025 INTEGRATED DESIGNS INC.

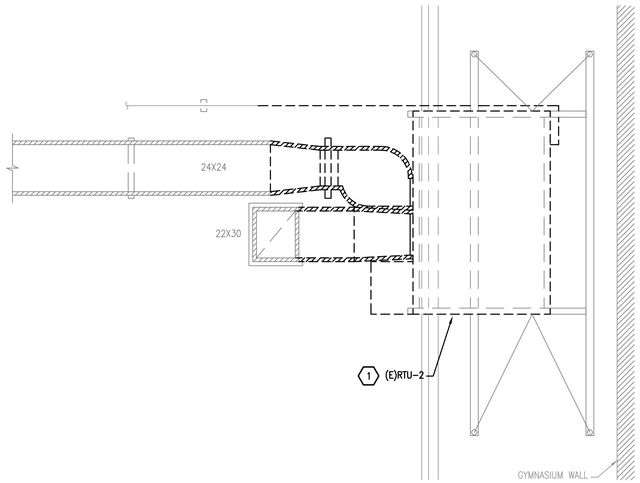

4 MECHANICAL DEMOLITION PLAN - AREA 'B' ROOF (MEDIA CENTER)
SCALE: 1/4" = 1'-0"

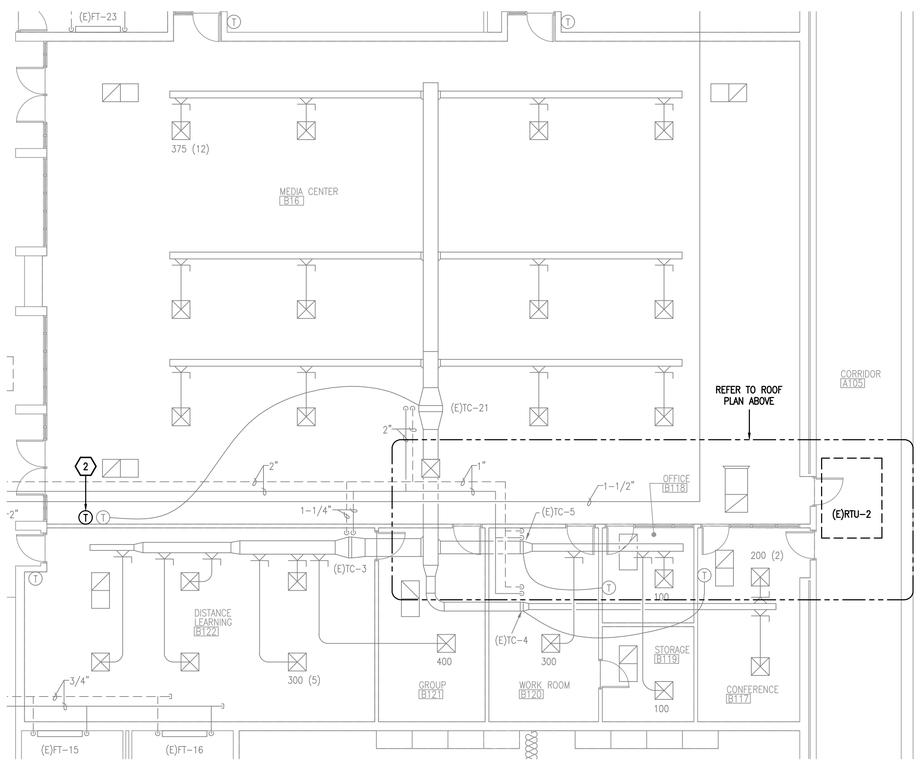

3 MECHANICAL DEMOLITION PLAN - AREA 'B' (MEDIA CENTER)
SCALE: 1/8" = 1'-0"

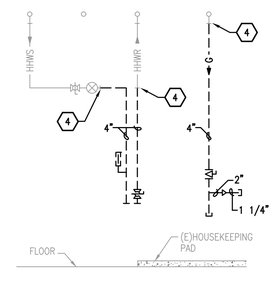

2 BOILER PIPING DETAIL
SCALE: N.T.S.

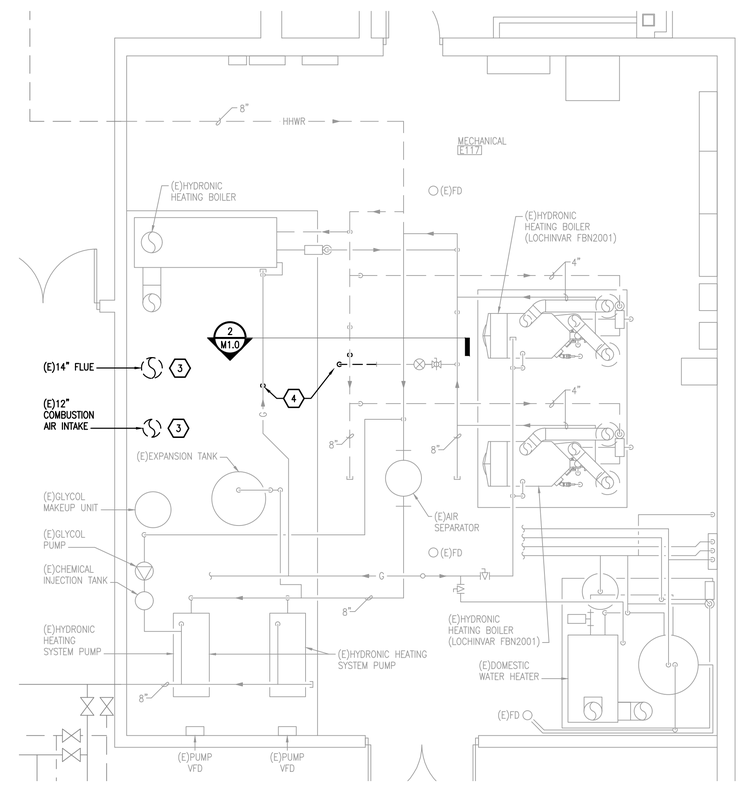

1 MECHANICAL DEMOLITION PLAN - AREA 'F' (BOILER ROOM)
SCALE: 1/4" = 1'-0"

KEY PLAN

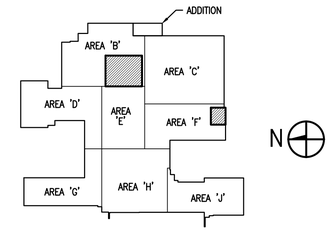

KEYNOTES

1. REMOVE ROOFTOP UNIT COMPLETE. DISCONNECT AND REMOVE RETURN AIR DUCT AT A POINT ABOVE ROOF PENETRATION. REMOVE A SECTION OF SUPPLY DUCT AS SHOWN. DISCONNECT AND REMOVE A PORTION OF GAS PIPING BACK TO POINT SHOWN. REMOVE PORTIONS OF STEEL REINFORCEMENT THAT WILL OBSTRUCT NEW UNIT INSTALLATION. MAINTAIN EXISTING STEEL COLUMNS THROUGH ROOF AND MAIN HORIZONTAL BEAMS.
2. REMOVE THERMOSTAT.
3. REMOVE FLUE AND AIR INTAKE DUCT THROUGH ROOF. MAINTAIN OPENINGS FOR REUSE.
4. REMOVE SECTIONS OF HYDRONIC HEATING PIPE AND GAS PIPE AS SHOWN.

MARQUETTE OFFICE:
1021 W. BARAGA AVENUE
MARQUETTE, MI 49855
PHONE: (906)228-4483
FAX: (906)228-7524

BIRGHTON OFFICE:
5577 CLYDE CARTER AVE., SUITE 600
BRIGHTON, MI 48116
PHONE: (810)229-2701
FAX: (810)229-4787

INTEGRATED DESIGNS INC.
ARCHITECTURE ENGINEERING CONSULTING

HARBOR BEACH COMMUNITY SCHOOLS
PHASE 1 - 2026 ADDITION & RENOVATIONS
HARBOR BEACH, MICHIGAN
PROJECT NO. 24-138

	BY	NO.	REVISIONS	DATE
		A	SCHEMATIC DESIGN	04.16.26
		B	DESIGN DEVELOPMENT	06.03.26
		C	95% OWNER REVIEW	08.03.26
		0	FOR CONSTRUCTION	08.28.26
DESIGN	CRP			
DRAWN	CRP			
CHECKED	SLB			
APPROVED	SLB			

MECHANICAL DEMOLITION PLANS

COPYRIGHT © 2026 INTEGRATED DESIGNS INC.

M1.0

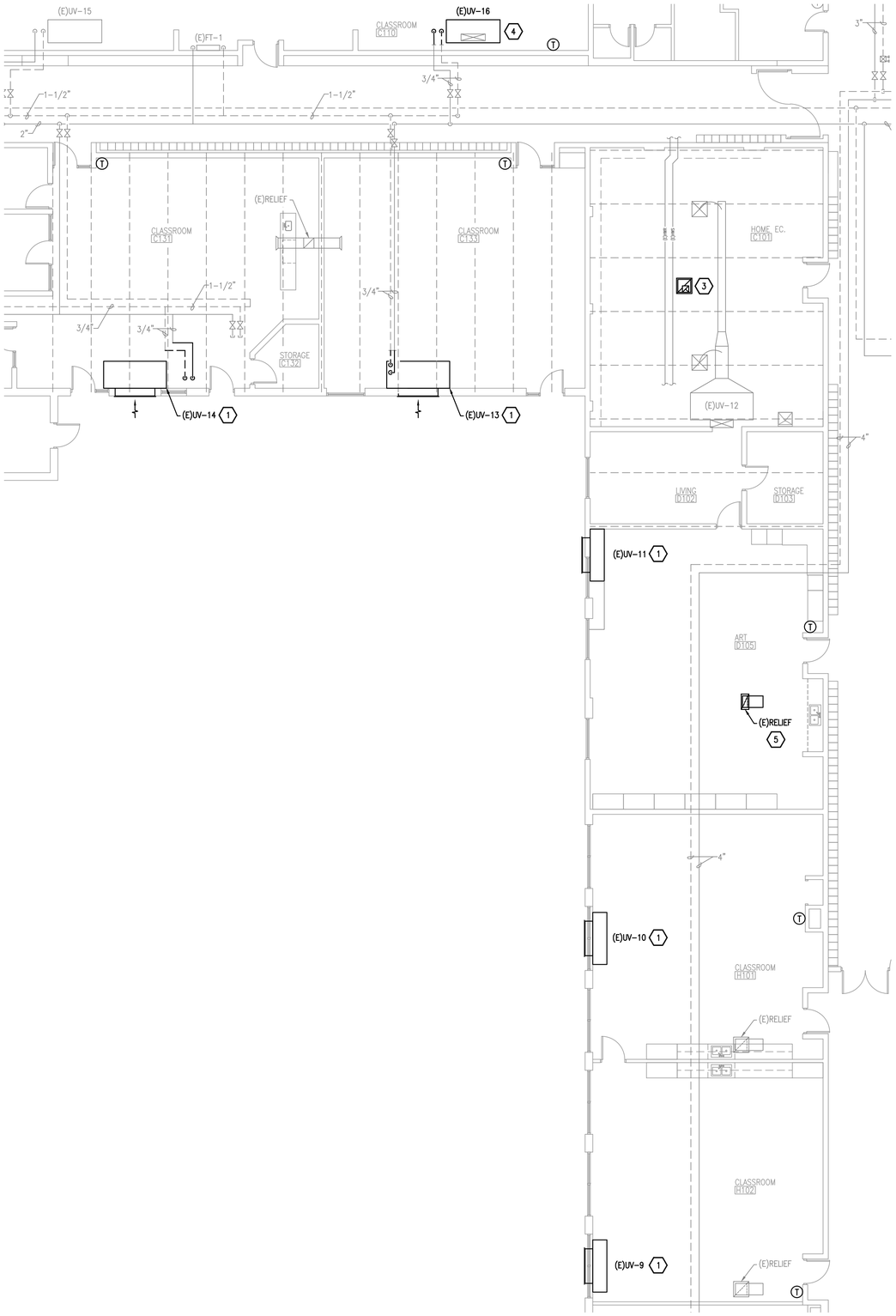

2 MECHANICAL DEMOLITION PLAN - AREA 'D' & 'G' (CLASSROOMS)
SCALE: 1/8" = 1'-0"

KEY PLAN

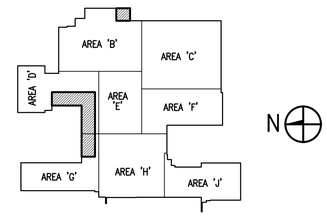

KEYNOTES

1. REMOVE UNIT VENTILATOR. REMOVE ASSOCIATED HYDRONIC PIPING, ISOLATION VALVES AND CONTROL VALVE AND PREPARE FOR NEW WORK. REMOVE AND PATCH ANY OUTSIDE AIR OPENINGS. COORDINATE WITH ARCHITECTURAL PLANS. REPLACE WALL MOUNTED THERMOSTAT.
2. REMOVE UNIT VENTILATOR AND SALVAGE FOR RELOCATION. REMOVE A PORTION OF HYDRONIC HEATING SUPPLY AND RETURN PIPING FOR REWORK. REMOVE EXTERIOR LOUVER, CLEAN, AND SAVE FOR REINSTALLATION. REMOVE WALL SLEEVE AND COORDINATE WALL PATCHING WITH ARCHITECTURAL TRADES.
3. REMOVE EXHAUST FAN AND DUCT THROUGH ROOF. COORDINATE PATCHING OF ROOF WITH MANUFACTURER'S REPRESENTATIVE AND WARRANTY.
4. REMOVE UNIT VENTILATOR. REMOVE ASSOCIATED HYDRONIC PIPING, ISOLATION VALVES AND CONTROL VALVE AND PREPARE FOR NEW WORK. MAINTAIN EXISTING OUTSIDE AIR DUCT THROUGH ROOF AND PREPARE FOR NEW CONNECTION. REPLACE WALL MOUNTED THERMOSTAT.
5. REMOVE RELIEF GRILLE AND DUCT COMPLETE. REPLACE CEILING TILE.

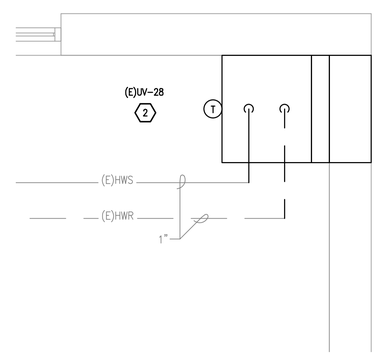

1 MECHANICAL DEMOLITION PLAN
AREA 'B' (CLASSROOM B108)
SCALE: 1/8" = 1'-0"

INTEGRATED DESIGNS INC.
ARCHITECTURE ENGINEERING CONSULTING
MARQUETTE OFFICE:
1021 W. BARAGA AVENUE
MARQUETTE, MI 49855
PHONE: (906)228-4483
FAX: (906)228-7524
BIRGHTON OFFICE:
210 EAST GRAND RIVER AVE., SUITE 600
BRIGHTON, MI 48116
PHONE: (810)229-2701
FAX: (810)229-6167

HARBOR BEACH COMMUNITY SCHOOLS
PHASE 1 - 2026 ADDITION & RENOVATIONS
HARBOR BEACH, MICHIGAN
PROJECT NO. 24-138

	BY	NO.	REVISIONS	DATE
DESIGN	CRP	A	SCHEMATIC DESIGN	04.16.26
DRAWN	CRP	B	DESIGN DEVELOPMENT	06.03.26
CHECKED	SLB	C	95% OWNER REVIEW	08.03.26
APPROVED	SLB	0	FOR CONSTRUCTION	08.28.26

MECHANICAL DEMOLITION PLANS

COPYRIGHT © 2026 INTEGRATED DESIGNS INC.

M1.1

KEY PLAN

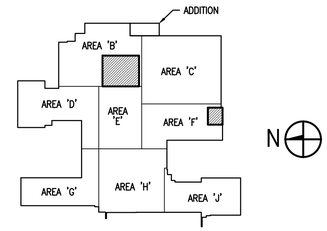

KEYNOTES

1. INSTALL NEW ROOFTOP UNIT WITH NEW STRUCTURAL STEEL DUNNAGE ON ROOF. COORDINATE WITH STRUCTURAL.
2. EXTEND AND REWORK GAS PIPE FOR NEW CONNECTION TO ROOFTOP UNIT. TIE INTO EXISTING. REFER TO "TYPICAL GAS PIPING CONNECTION DETAIL" FOR CONNECTION TO RTU. INSTALL PIPING ON ADJUSTABLE GAS PIPE SUPPORTS. REFER TO "GAS PIPE SUPPORT ROOF DETAIL" FOR ADDITIONAL INFORMATION.
3. INSTALL EXTERIOR DUCT ON PRE-FABRICATED STEEL SUPPORTS WITH POLY BASES. REFER TO "EXTERIOR DUCT SUPPORT DETAIL" FOR ADDITIONAL INFORMATION.
4. EXTERIOR DUCT SHALL BE FULLY INSULATED. REFER TO "EXTERIOR DUCT INSULATION DETAIL" FOR ADDITIONAL INFORMATION.
5. EXISTING STEEL DUNNAGE AND COLUMNS THROUGH ROOF.
6. MANUFACTURER REQUIRED CLEARANCE.
7. BALANCE EXISTING DIFFUSERS TO AIRFLOW SHOWN.
8. REPLACE EXISTING MAKEUP WATER BACKFLOW PREVENTER IF IT IS NOT RATED FOR A MINIMUM 250 DEGREES F.
9. INSTALL AIR INTAKE AND FLUE THROUGH EXISTING ROOF OPENINGS. REFER TO "VERTICAL TERMINATION OF BOILER VENT & AIR INTAKE" DETAIL FOR ADDITIONAL INFORMATION.
10. EXISTING ROOF PENETRATIONS.
11. COORDINATE EQUIPMENT IDENTIFICATION WITH EXISTING BOILERS AND PUMPS AS NEEDED.

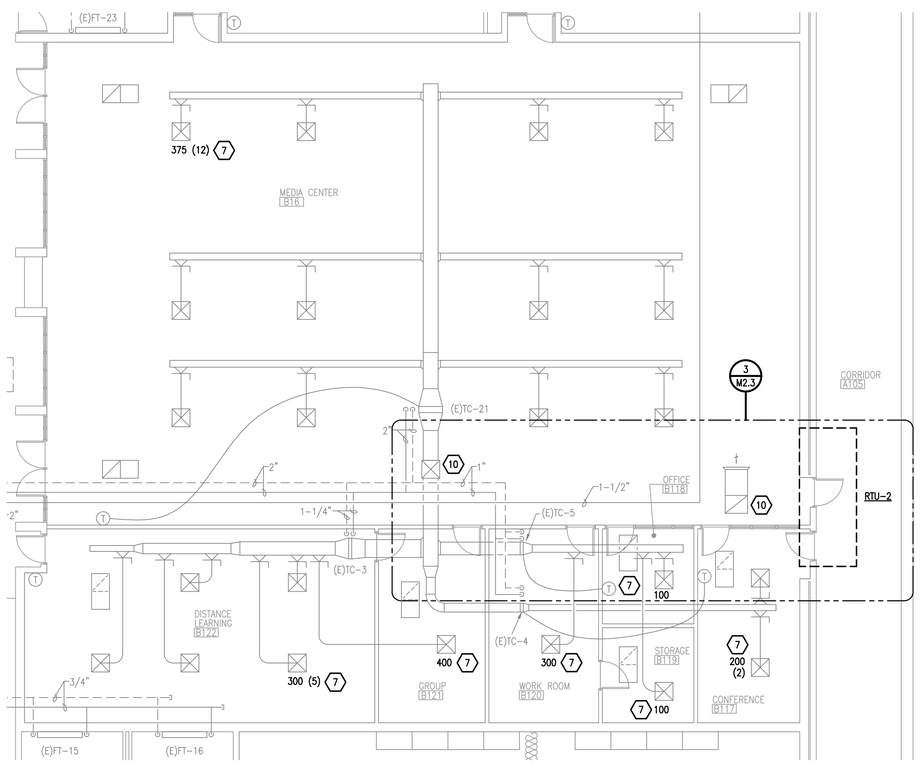

4 MECHANICAL NEW WORK PLAN - AREA 'B' (MEDIA CENTER)
SCALE: 1/8" = 1'-0"

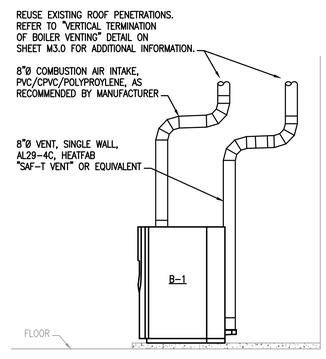

3 BOILER VENTING DETAIL
SCALE: N.T.S.

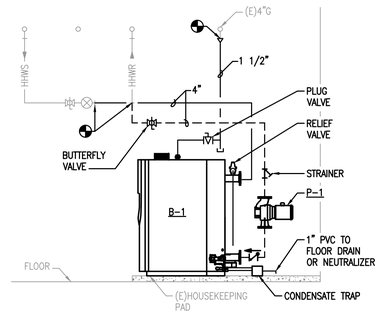

2 BOILER PIPING DETAIL
SCALE: N.T.S.

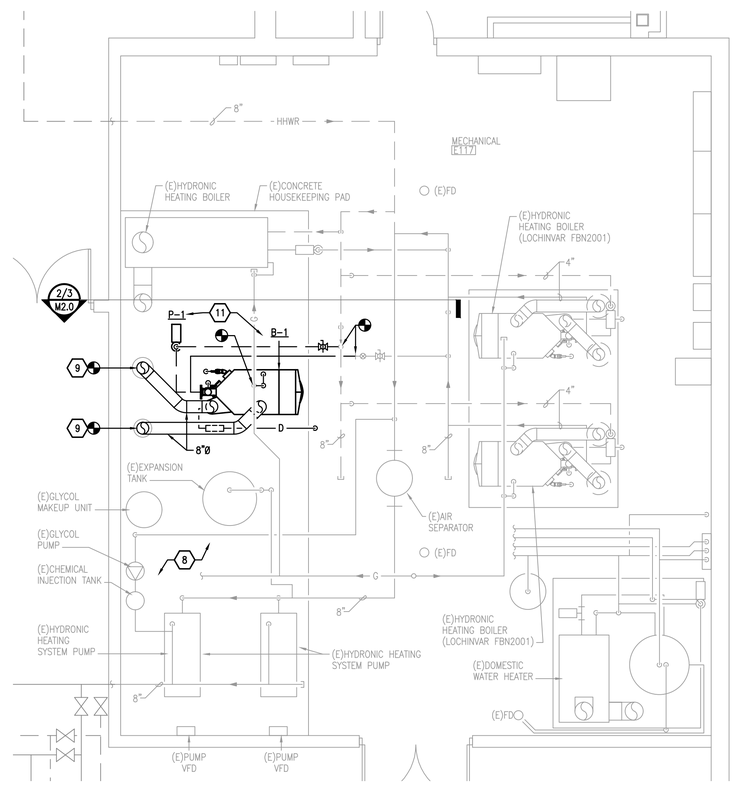

1 MECHANICAL NEW WORK PLAN - AREA 'F' (BOILER ROOM)
SCALE: 1/4" = 1'-0"

MARQUETTE OFFICE:
1021 W. BARAGA AVENUE
MARQUETTE, MI 49855
PHONE: (906)228-4400
FAX: (906)228-7524

BIRGHTON OFFICE:
601 CLARK STREET AVE., SUITE 600
BRIGHTON, MI 48116
PHONE: (810)229-2701
FAX: (810)229-6787

INTEGRATED DESIGNS INC.
ARCHITECTURE ENGINEERING CONSULTING

HARBOR BEACH COMMUNITY SCHOOLS
PHASE 1 - 2026 ADDITION & RENOVATIONS
HARBOR BEACH, MICHIGAN
PROJECT NO. 24-138

	BY
DESIGN	CRP
DRAWN	CRP
CHECKED	SLB
APPROVED	SLB

NO.	REVISIONS	DATE
A	SCHEMATIC DESIGN	04.16.26
B	DESIGN DEVELOPMENT	06.03.26
C	95% OWNER REVIEW	08.03.26
0	FOR CONSTRUCTION	08.28.26

MECHANICAL NEW WORK PLANS

COPYRIGHT © 2026 INTEGRATED DESIGNS INC.

M2.0

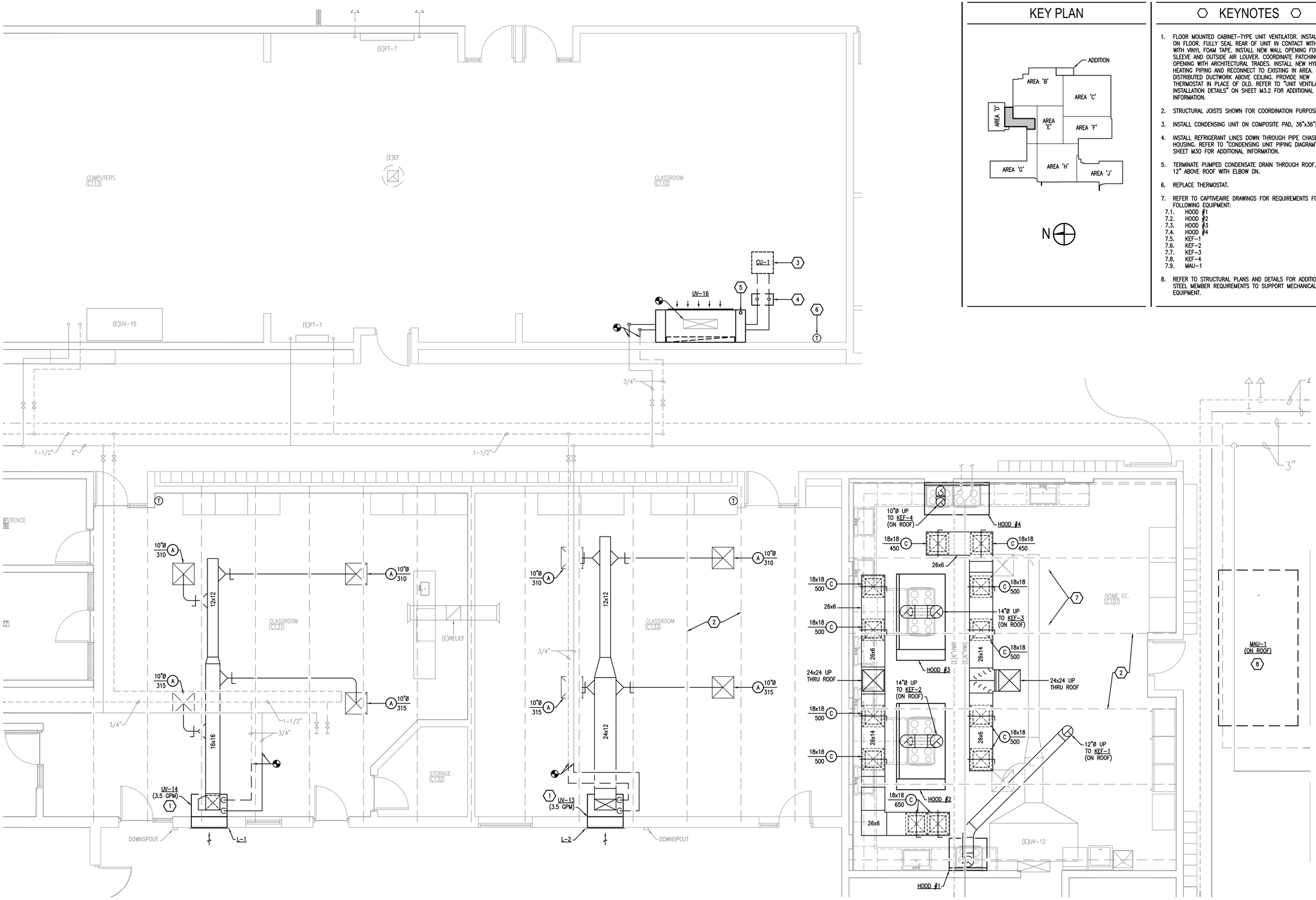

KEY PLAN

KEYNOTES

1. FLOOR MOUNTED CABINET–TYPE UNIT VENTILATOR. INSTALL LEVEL ON FLOOR. FULLY SEAL REAR OF UNIT IN CONTACT WITH WALL WITH VINYL FOAM TAPE. INSTALL NEW WALL OPENING FOR WALL SLEEVE AND OUTSIDE AIR LOUVER. COORDINATE PATCHING OF OLD OPENING WITH ARCHITECTURAL TRADES. INSTALL NEW HYDRONIC HEATING PIPING AND RECONNECT TO EXISTING IN AREA. INSTALL DISTRIBUTED DUCTWORK ABOVE CEILING. PROVIDE NEW THERMOSTAT IN PLACE OF OLD. REFER TO "UNIT VENTILATOR INSTALLATION DETAILS" ON SHEET M3.2 FOR ADDITIONAL INFORMATION.
2. STRUCTURAL JOISTS SHOWN FOR COORDINATION PURPOSES (TYP).
3. INSTALL CONDENSING UNIT ON COMPOSITE PAD, 36"x36"x3".
4. INSTALL REFRIGERANT LINES DOWN THROUGH PIPE CHASE AND HOUSING. REFER TO "CONDENSING UNIT PIPING DIAGRAM" ON SHEET M3O FOR ADDITIONAL INFORMATION.
5. TERMINATE PUMPED CONDENSATE DRAIN THROUGH ROOF. EXTEND 12" ABOVE ROOF WITH ELBOW DN.
6. REPLACE THERMOSTAT.
7. REFER TO CAPTIVEAIRE DRAWINGS FOR REQUIREMENTS FOR THE FOLLOWING EQUIPMENT:
   - 7.1. HOOD #1
   - 7.2. HOOD #2
   - 7.3. HOOD #3
   - 7.4. HOOD #4
   - 7.5. KEF-1
   - 7.6. KEF-2
   - 7.7. KEF-3
   - 7.8. KEF-4
   - 7.9. MAU-1
8. REFER TO STRUCTURAL PLANS AND DETAILS FOR ADDITIONAL STEEL MEMBER REQUIREMENTS TO SUPPORT MECHANICAL EQUIPMENT.

MARQUETTE OFFICE:
1021 W. BARAGA AVENUE
MARQUETTE, MI 49855
PHONE: (906)228-4483
FAX: (906)228-7524

BRIGHTON OFFICE:
9175 GRAND RIVER AVE., SUITE 600
BRIGHTON, MI 48116
PHONE: (810)229-2701
FAX: (810)229-4787

INTEGRATED DESIGNS INC.
ARCHITECTURE
ENGINEERING
CONSULTING

HARBOR BEACH COMMUNITY SCHOOLS
PHASE 1 - 2026 ADDITION & RENOVATIONS
HARBOR BEACH, MICHIGAN
PROJECT NO. 24-138

NO.	REVISIONS	DATE
A	SCHEMATIC DESIGN	04.16.26
B	DESIGN DEVELOPMENT	06.03.26
C	95% OWNER REVIEW	08.03.26
0	FOR CONSTRUCTION	08.28.26

	BY
DESIGN	CRP
DRAWN	CRP
CHECKED	SLB
APPROVED	SLB

MECHANICAL
NEW WORK
PLANS

COPYRIGHT © 2026 INTEGRATED DESIGNS INC.

M2.1

1 MECHANICAL NEW WORK PLAN - HOME EC. AND CLASSROOM RENOVATIONS
SCALE: 1/4" = 1'-0"

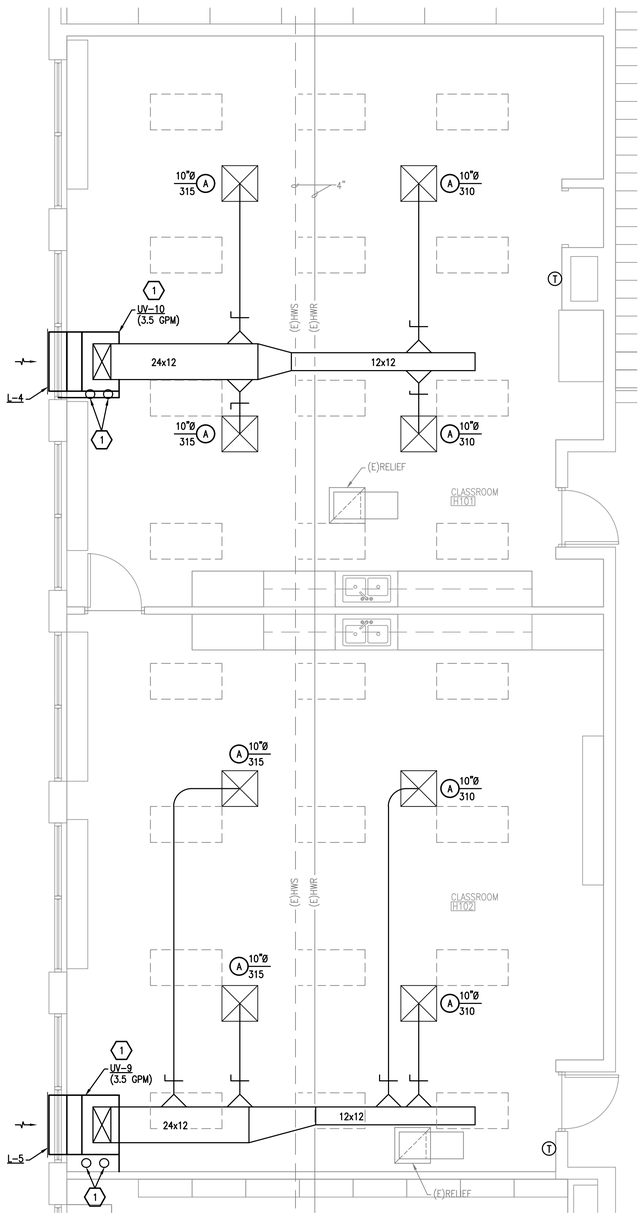

3 MECHANICAL NEW WORK PLAN - CLASSROOM RENOVATIONS

SCALE: 1/4" = 1'-0"

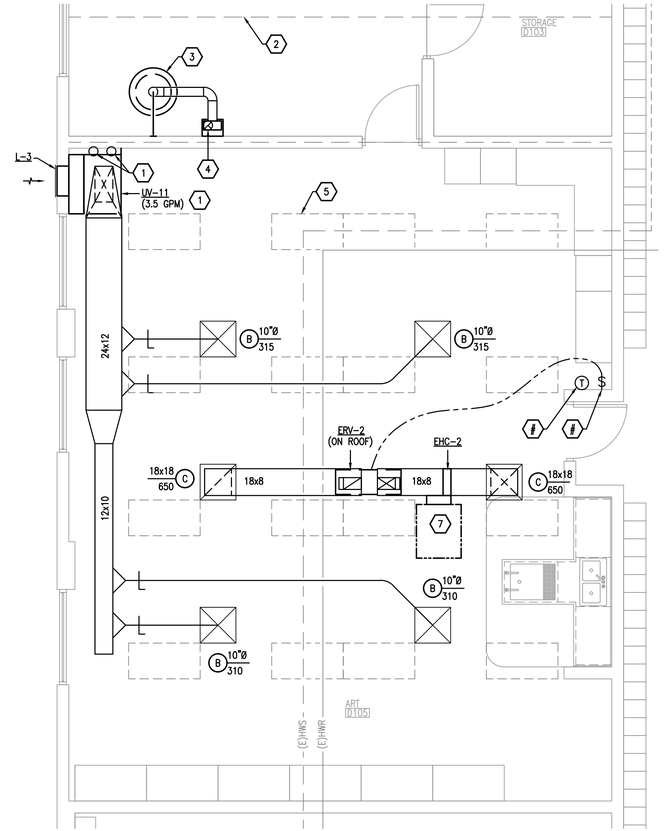

2 MECHANICAL NEW WORK PLAN - ART ROOM RENOVATIONS

SCALE: 1/4" = 1'-0"

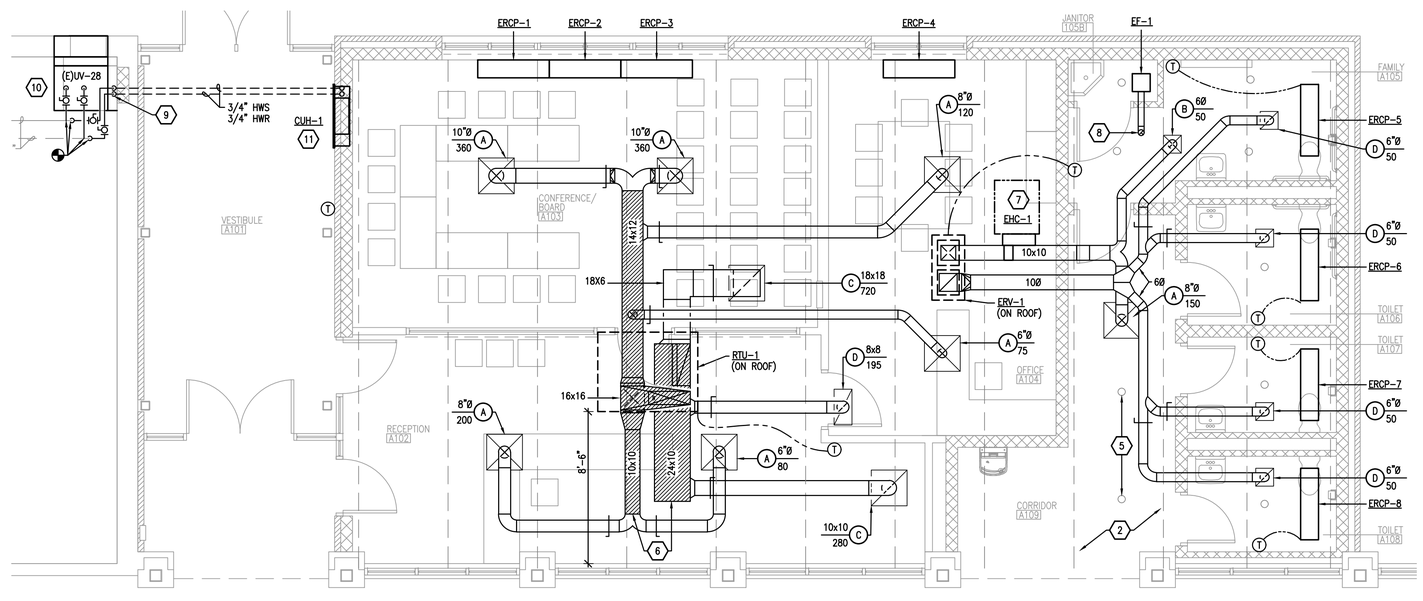

1 MECHANICAL NEW WORK PLAN - OFFICE ADDITION

SCALE: 1/4" = 1'-0"

KEY PLAN

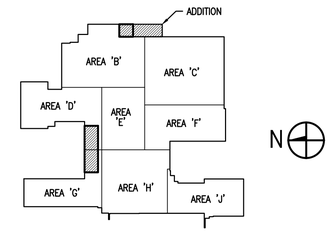

KEYNOTES

1. FLOOR MOUNTED CABINET-TYPE UNIT VENTILATOR. INSTALL LEVEL ON FLOOR. FULLY SEAL REAR OF UNIT IN CONTACT WITH WALL WITH VINYL FOAM TAPE. INSTALL NEW WALL OPENING FOR WALL SLEEVE AND OUTSIDE AIR LOUVER. COORDINATE PATCHING OF OLD OPENING WITH ARCHITECTURAL TRADES. INSTALL NEW 1" HYDRONIC HEATING PIPING AND VALVES AND RECONNECT TO EXISTING MAINS IN TUNNEL. INSTALL DISTRIBUTED DUCTWORK ABOVE CEILING. PROVIDE NEW THERMOSTAT IN PLACE OF OLD. REFER TO "UNIT VENTILATOR INSTALLATION DETAILS" ON SHEET M3.2 FOR ADDITIONAL INFORMATION.
2. STRUCTURAL JOISTS SHOWN FOR COORDINATION PURPOSES (TYP).
3. KILN EXHAUST KIT. REFER TO DETAIL 9/M3.0 FOR ADDITIONAL INFORMATION.
4. 4"Ø DUCT UP THROUGH ROOF. REFER TO DETAIL 9/M3.0 FOR ADDITIONAL INFORMATION.
5. LIGHTS SHOWN FOR COORDINATION PURPOSES (TYP).
6. HATCHED DUCT REPRESENTS 1/2" ACOUSTICAL DUCT LINER ADDED TO INTERIOR OF DUCT. DIMENSIONS SHOWN ARE CLEAR INSIDE DUCT OPENING (TYP).
7. MANUFACTURER'S REQUIRED WORKING CLEARANCE.
8. 4"Ø EXHAUST TERMINATION, GREENHECK "RCC-7" OR EQUIVALENT. INSTALL ON MIN 14" CURB CAP.
9. INSTALL HYDRONIC HEATING PIPING DOWN ALONG INTERIOR FACE OF WALL TO BELOW FLOOR TO SERVE CABINET HEATER IN VESTIBULE. FURNISH SHEET METAL ENCLOSURE, COLOR TO MATCH UNIT VENTILATOR. PIPING BELOW GRADE SHALL BE PEX WITH NO FITTINGS.
10. INSTALL EXISTING UNIT VENTILATOR WITH OUTSIDE AIR LOUVER ON EAST WALL WITH NEW WALL SLEEVE. REPLICATE EXISTING INSTALLATION. REWORK/RECONNECT HYDRONIC HEATING SUPPLY AND RETURN PIPING.
11. INSTALL CABINET UNIT HEATER WITH TOP OF DECORATIVE WALL PLATE FLUSH WITH TOP OF BURNISHED BLOCK COURSE. REFERENCE ARCHITECTURAL SECTIONS FOR ADDITIONAL INFORMATION. RECOMMENDED WALL OPENING IS APPROXIMATELY 40"x26".

MARQUETTE OFFICE:
1021 W. BARAGA AVENUE
MARQUETTE, MI 49855
PHONE: (906)228-4449
FAX: (906)228-7524

BIRGHTON OFFICE:
8101 GRAND RIVER AVE., SUITE 600
BRIGHTON, MI 48116
PHONE: (810)229-2701
FAX: (810)229-6767

INTEGRATED DESIGNS INC.
ARCHITECTURE ENGINEERING CONSULTING

HARBOR BEACH COMMUNITY SCHOOLS
PHASE 1 - 2026 ADDITION & RENOVATIONS
HARBOR BEACH, MICHIGAN

PROJECT NO. 24-138

NO.	REVISIONS	DATE
A	SCHEMATIC DESIGN	04.16.26
B	DESIGN DEVELOPMENT	06.03.26
C	95% OWNER REVIEW	08.03.26
0	FOR CONSTRUCTION	08.28.26

	BY
DESIGN	CRP
DRAWN	CRP
CHECKED	SLB
APPROVED	SLB

MECHANICAL NEW WORK PLANS

COPYRIGHT © 2026 INTEGRATED DESIGNS INC.

M2.2

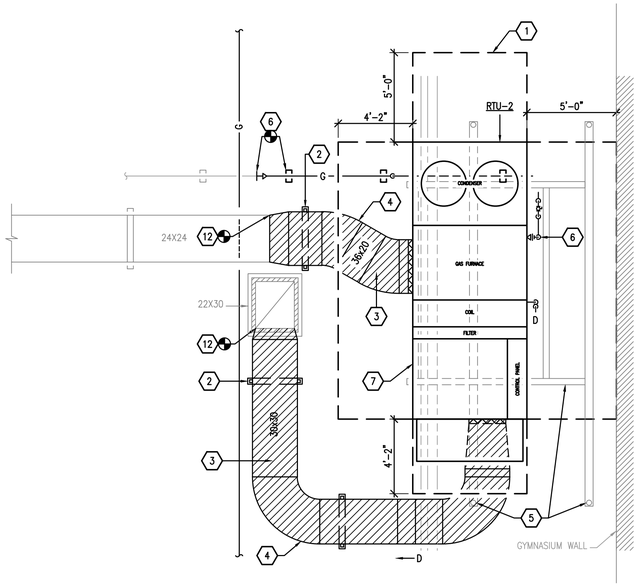

3 MECHANICAL NEW WORK PLAN - MEDIA CENTER ROOF
SCALE: 1/4" = 1'-0"

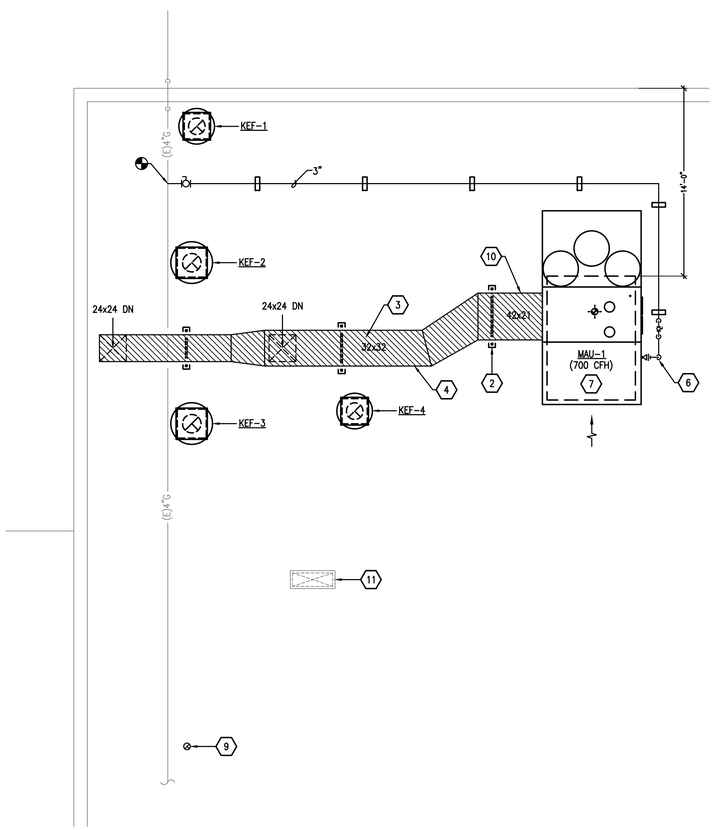

2 MECHANICAL NEW WORK PLAN - HOME EC ROOF
SCALE: 3/16" = 1'-0"

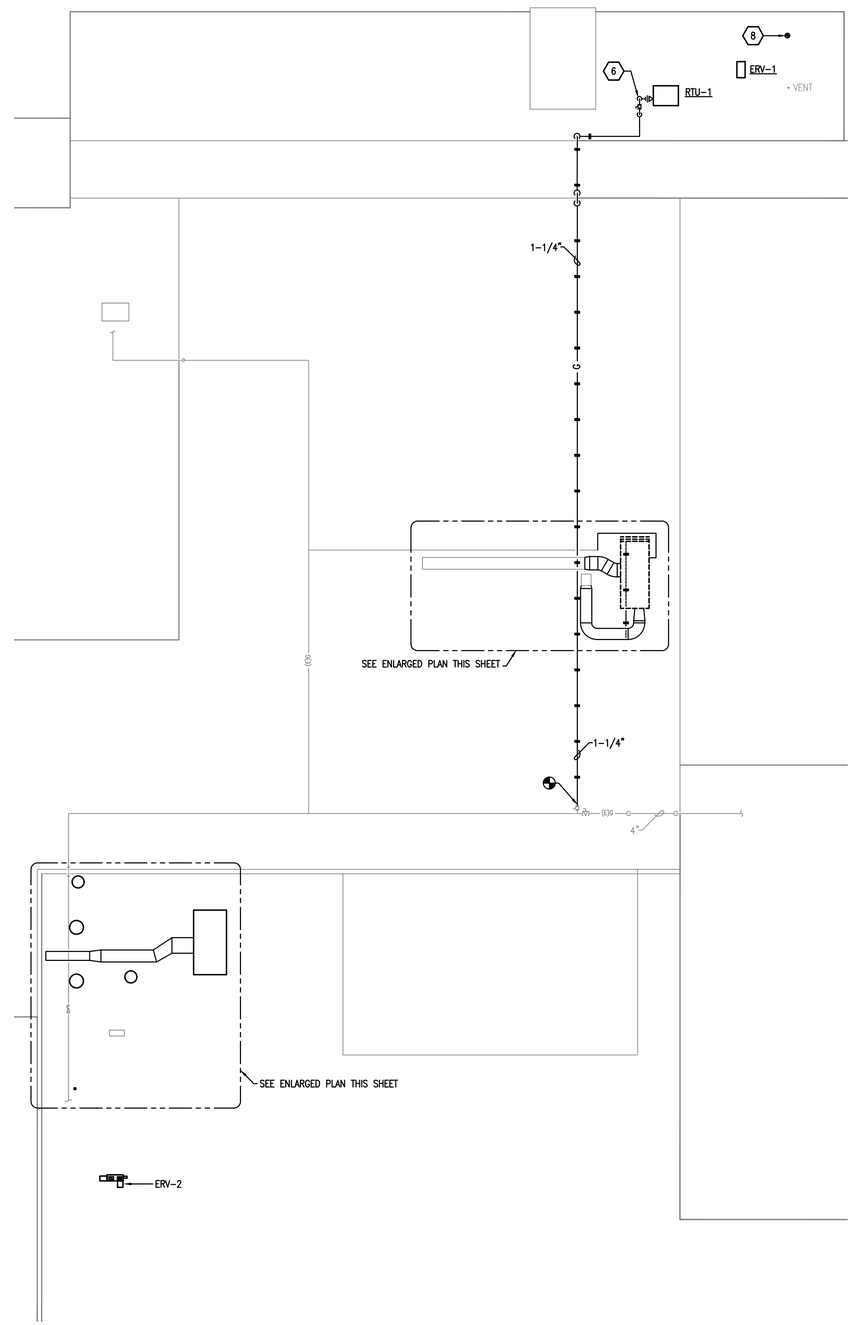

1 MECHANICAL NEW WORK PLAN - ROOF
SCALE: 1/16" = 1'-0"

KEYNOTES

1. ACCESS AND MAINTENANCE CLEARANCE AS RECOMMENDED BY MECHANICAL EQUIPMENT MANUFACTURER. MAY VARY WITH OTHER MANUFACTURERS (TYP).
2. ROOF MOUNTED DUCT SUPPORT. REFER TO "EXTERIOR DUCT SUPPORT DETAIL" FOR ADDITIONAL INFORMATION (TYP). SPACING AND QUANTITY BASED ON MANUFACTURER'S REQUIREMENTS.
3. HATCHED DUCT REPRESENTS 1/2" ACOUSTICAL DUCT LINER ADDED TO INTERIOR OF DUCT. DIMENSIONS SHOWN ARE CLEAR INSIDE DUCT OPENING (TYP).
4. REFER TO "METAL DUCTS" SPECIFICATION FOR DUCT LINER AND "DUCT INSULATION" SPECIFICATION FOR OUTDOOR DUCT INSULATION SCHEDULE. REFER TO "EXTERIOR DUCT INSULATION DETAIL" FOR ADDITIONAL INFORMATION.
5. EXISTING STEEL DUNNAGE. COORDINATE ANY ADDITIONAL STEEL SUPPORT WITH STRUCTURAL.
6. EXTEND/REWORK GAS PIPING TO FEED NEW ROOFTOP UNIT. INSTALL ON GAS PIPE SUPPORTS, SPACED PER MANUFACTURER REQUIREMENTS. REFER TO "TYPICAL GAS PIPING CONNECTION DETAIL" FOR ADDITIONAL INFORMATION.
7. REFER TO STRUCTURAL PLANS AND DETAILS FOR ADDITIONAL STEEL MEMBER REQUIREMENTS TO SUPPORT MECHANICAL EQUIPMENT.
8. EXHAUST TERMINATION, GREENHECK "RCC-7" OR EQUIVALENT. INSTALL ON MIN 14" CURB CAP.
9. KILN VENT TERMINATION. REFER TO DETAIL 8/M3.0 FOR ADDITIONAL INFORMATION.
10. MINIMUM 3' STRAIGHT DUCT PER MANUFACTURER REQUIREMENTS.
11. EXISTING OUTSIDE AIR INTAKE. MAINTAIN MINIMUM 10'-0" CLEARANCE FROM EXHAUST OR VENT TERMINATIONS.
12. CONTRACTOR SHALL FIELD VERIFY EXISTING DUCT SIZES FOR NEW CONNECTIONS.

KEY PLAN

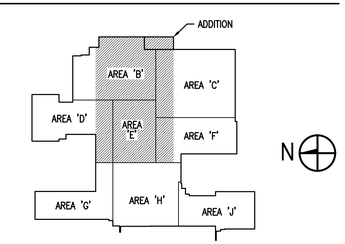

MARQUETTE OFFICE:
1021 W. BARAGA AVENUE
MARQUETTE, MI 49855
PHONE: (906)228-4483
FAX: (906)228-7524

BRIGHTON OFFICE:
127 E. GRAND RIVER AVE., SUITE 600
BRIGHTON, MI 48116
PHONE: (810)229-2701
FAX: (810)229-6787

INTEGRATED DESIGNS INC.
ARCHITECTURE ENGINEERING CONSULTING

HARBOR BEACH COMMUNITY SCHOOLS
PHASE 1 - 2026 ADDITION & RENOVATIONS
HARBOR BEACH, MICHIGAN
PROJECT NO. 24-138

	BY	NO.	REVISIONS	DATE
DESIGN	CRP	B	DESIGN DEVELOPMENT	06.03.26
DRAWN	CRP	C	95% OWNER REVIEW	08.03.26
CHECKED	SLB	0	FOR CONSTRUCTION	08.28.26
APPROVED	SLB			

MECHANICAL NEW WORK PLANS

COPYRIGHT © 2026 INTEGRATED DESIGNS INC.

M2.3

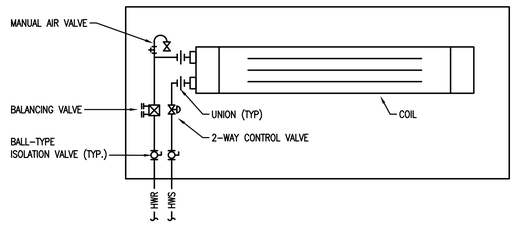

8 CABINET UNTI HEATER PIPING DIAGRAM
N.T.S.

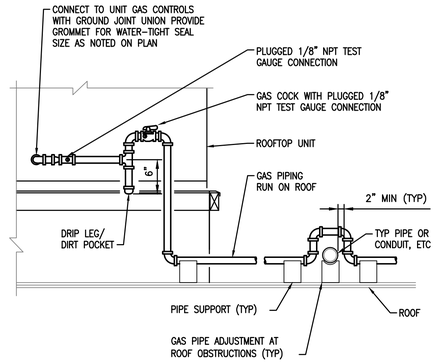

6 GAS PIPING CONNECTION DETAIL
N.T.S. TYP.

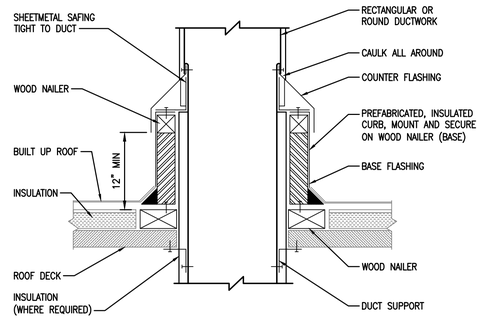

3 DUCT PENETRATION THRU ROOF DETAIL
N.T.S. TYP.

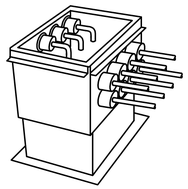

1. ALTA PRODUCTS "AL-" SERIES HOUSING
1.1. 12 GAUGE ALUMINUM HOUSING AND LID
1.2. UV PROTECTED POWDER COAT.
1.3. FULL THERMAL BREAK INTERIOR WITH GASKETS AND INSULATION.
1.4. STAINLESS STEEL FASTENERS.

2. ALTA PRODUCTS "ALTC-" SERIES CURB
2.1. 12 GAUGE ALUMINUM, NO FINISH.
2.2. MINIMUM 18" TALL.

3. SIGRIST EXIT SEAL
3.1. INJECTION MOLDED ABS, SCHEDULE 80 WHITE
3.2. SIZES 1/4" THROUGH 1 5/8"

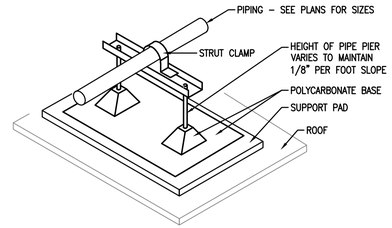

5 GAS PIPE SUPPORT ROOF DETAIL
N.T.S. TYP.

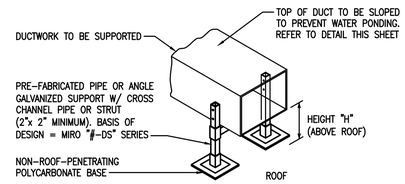

NOTES:
1. REFER TO MANUFACTURER'S SIZING GUIDELINES FOR PROPER SUPPORT SIZE AND SPACING

2 EXTERIOR DUCT SUPPORT DETAIL
N.T.S. TYP.

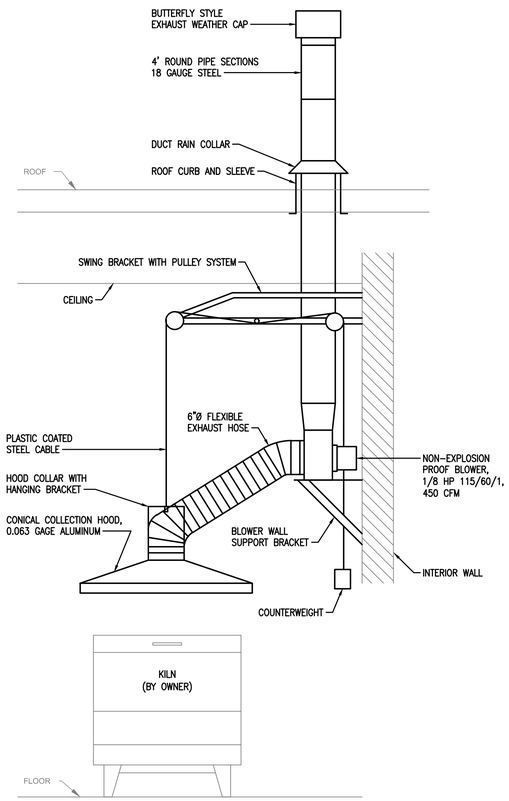

NOTES:
1. BASIS OF DESIGN IS "VENT-A-FUME" VENT HOOD KIT #500-NP-SWB BY VENT-A-KILN CORP.

9 KILN EXHAUST INSTALLATION DETAIL
N.T.S.

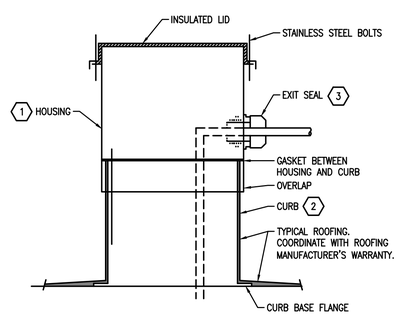

REFRIGERANT PIPE CHASE AND HOUSING

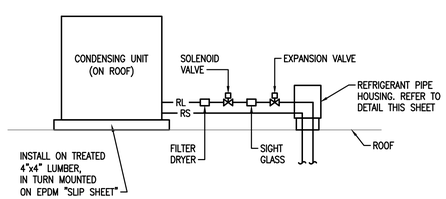

REFRIGERANT PIPING

7 CONDENSING UNIT PIPING DIAGRAM
N.T.S. (TYP.)

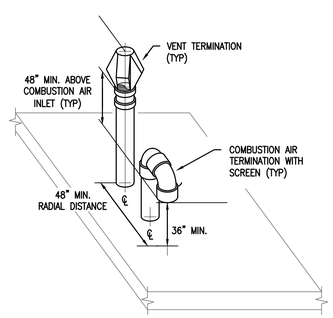

NOTES:
1. FOLLOW MANUFACTURER'S INSTALLATION RECOMMENDATIONS FOR FLUE GAS TERMINATION.
2. FIELD VERIFY EXTENT OF ROOF PATCHING AND ROUTING OF NEW VENTS.

4 VERTICAL TERMINATION OF BOILER VENTING
N.T.S. (TYP.)

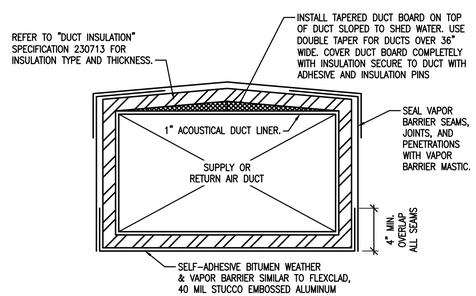

1 EXTERIOR DUCT INSULATION DETAIL
N.T.S. TYP.

MARQUETTE OFFICE:
1021 W. BARAGA AVENUE
MARQUETTE, MI 49855
PHONE: (906)228-4449
FAX: (906)228-7524

BIRGHTON OFFICE:
5577 GRAND RIVER AVE., SUITE 600
BRIGHTON, MI 48116
PHONE: (810)229-2701
FAX: (810)229-4787

INTEGRATED DESIGNS INC.
ARCHITECTURE ENGINEERING CONSULTING

HARBOR BEACH COMMUNITY SCHOOLS
PHASE 1 - 2026 ADDITION & RENOVATIONS
HARBOR BEACH, MICHIGAN
PROJECT NO. 24-138

	BY	NO.	REVISIONS	DATE
DESIGN	CRP	B	DESIGN DEVELOPMENT	06.03.26
DRAWN	CRP	C	95% OWNER REVIEW	08.03.26
CHECKED	SLB	0	FOR CONSTRUCTION	08.28.26
APPROVED	SLB			

MECHANICAL DETAILS

COPYRIGHT © 2026 INTEGRATED DESIGNS INC.

M3.0

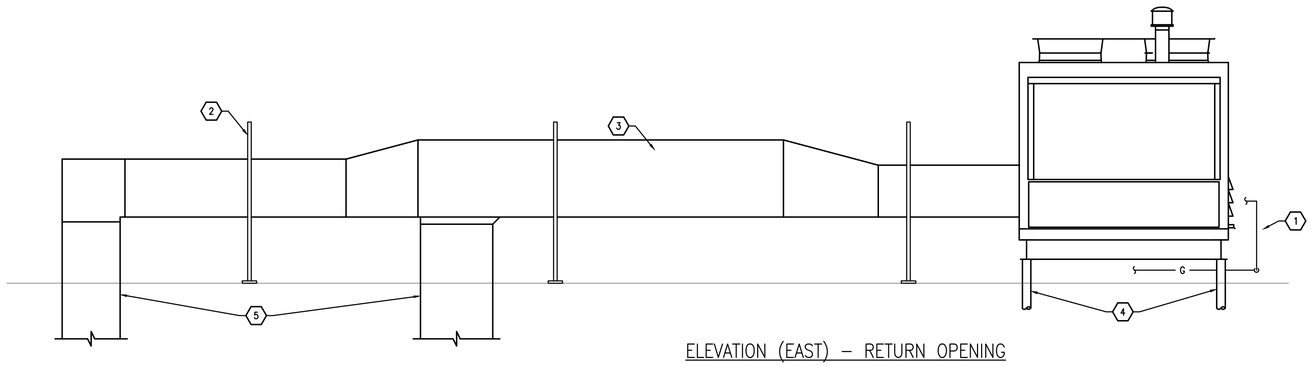

ELEVATION (EAST) – RETURN OPENING

NOTES
1. REFER TO "TYPICAL GAS PIPING CONNECTION DETAIL" FOR CONNECTION TO RTU. INSTALL PIPING ON ADJUSTABLE GAS PIPE SUPPORTS. REFER TO "GAS PIPE SUPPORT ROOF DETAIL" FOR ADDITIONAL INFORMATION.
2. INSTALL EXTERIOR DUCT ON PRE-FABRICATED STEEL SUPPORTS WITH POLY BASES. REFER TO "EXTERIOR DUCT SUPPORT DETAIL" FOR ADDITIONAL INFORMATION.
3. EXTERIOR DUCT SHALL BE FULLY INSULATED. REFER TO "EXTERIOR DUCT INSULATION DETAIL" FOR ADDITIONAL INFORMATION.
4. NEW STEEL DUNNAGE AND COLUMNS THROUGH ROOF. REFER TO STRUCTURAL PLANS AND DETAILS FOR INFORMATION.
5. REFER TO "DUCT PENETRATION THROUGH ROOF DETAIL" FOR ADDITIONAL INFORMATION.

MAU-1 (HOME EC) INSTALLATION DETAILS

N.T.S.

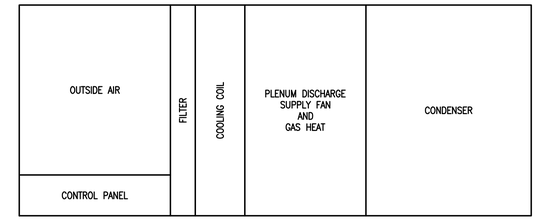

UNIT CONSTRUCTION – PLAN VIEW

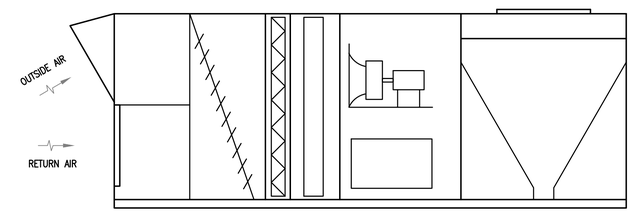

UNIT CONSTRUCTION – SECTION

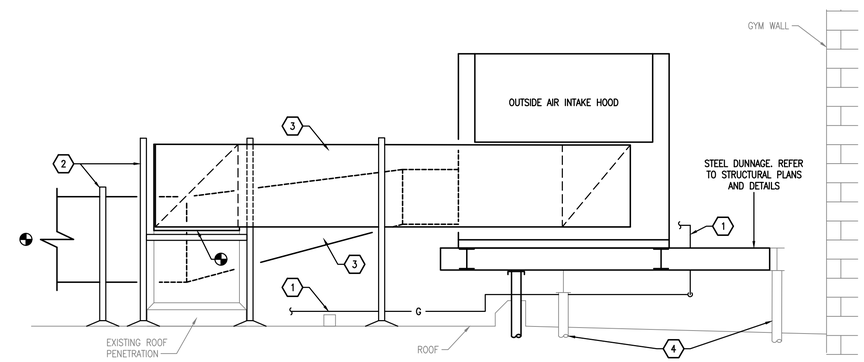

ELEVATION (EAST) – RETURN OPENING

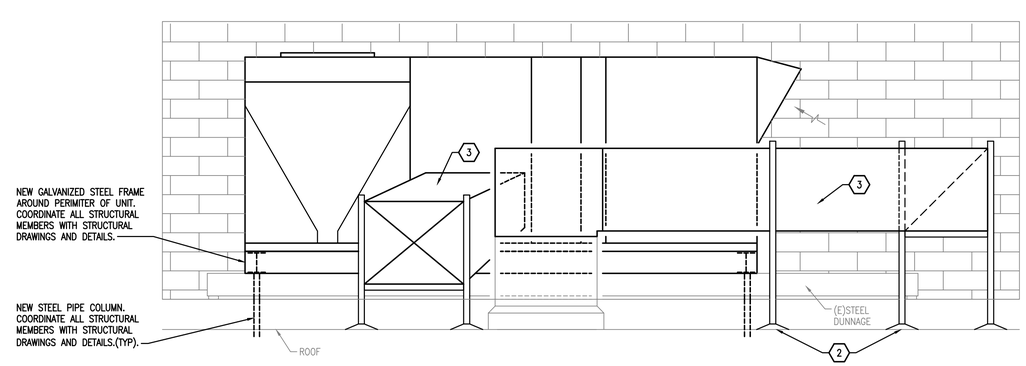

ELEVATION (SOUTH) – SUPPLY OPENING

NOTES
1. EXTEND AND REWORK GAS PIPE FOR NEW CONNECTION TO ROOFTOP UNIT. TIE INTO EXISTING. REFER TO "TYPICAL GAS PIPING CONNECTION DETAIL" FOR CONNECTION TO RTU. INSTALL PIPING ON ADJUSTABLE GAS PIPE SUPPORTS. REFER TO "GAS PIPE SUPPORT ROOF DETAIL" FOR ADDITIONAL INFORMATION.
2. INSTALL EXTERIOR DUCT ON PRE-FABRICATED STEEL SUPPORTS WITH POLY BASES. REFER TO "EXTERIOR DUCT SUPPORT DETAIL" FOR ADDITIONAL INFORMATION. (TYP)
3. EXTERIOR DUCT SHALL BE FULLY INSULATED. REFER TO "EXTERIOR DUCT INSULATION DETAIL" FOR ADDITIONAL INFORMATION. (TYP)
4. EXISTING STEEL DUNNAGE AND COLUMNS THROUGH ROOF.

RTU-2 (MEDIA CENTER) CONSTRUCTION & INSTALLATION DETAILS

N.T.S.

INTEGRATED DESIGNS INC.
ARCHITECTURE ENGINEERING CONSULTING
MARQUETTE OFFICE:
1021 W. BARAGA AVENUE
MARQUETTE, MI 49855
PHONE: (906)228-4449
FAX: (906)228-7524
BIRGHTON OFFICE:
127 GRAND RIVER AVE., SUITE 600
BRIGHTON, MI 48116
PHONE: (810)229-2701
FAX: (810)229-4787

HARBOR BEACH COMMUNITY SCHOOLS
PHASE 1 - 2026 ADDITION & RENOVATIONS
HARBOR BEACH, MICHIGAN
PROJECT NO. 24-138

	BY	NO.	REVISIONS	DATE
DESIGN	CRP	B	DESIGN DEVELOPMENT	06.03.26
DRAWN	CRP	C	95% OWNER REVIEW	08.03.26
CHECKED	SLB	0	FOR CONSTRUCTION	08.28.26
APPROVED	SLB			

MECHANICAL DETAILS

COPYRIGHT © 2026 INTEGRATED DESIGNS INC.

M3.1

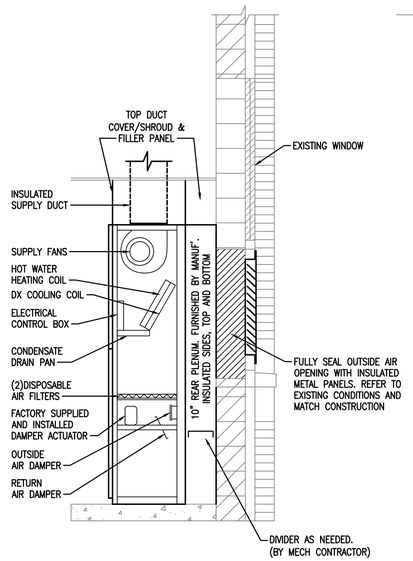

RIGHT SIDE VIEW

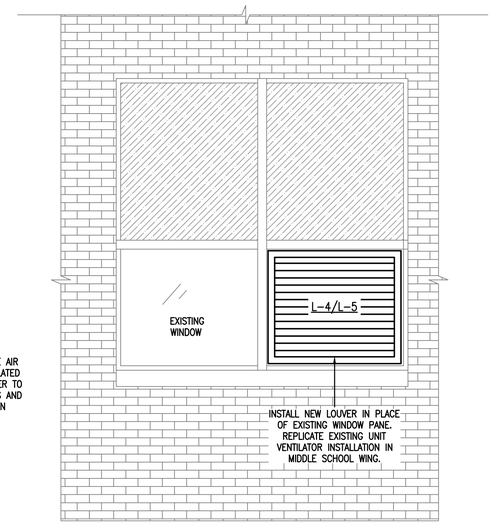

EXTERIOR VIEW

NOTES:
1. THE UNIT MUST BE INSTALLED PROPERLY ON LEVEL FLOOR SURFACE.
2. THE UNIT MUST BE LAGGED TO THE FLOOR.
3. REFER TO OWNER'S MANUAL/IOM INSTRUCTIONS FOR ADDITIONAL REQUIREMENTS.
4. WALL SLEEVE SHIPPED KNOCKED DOWN FOR FIELD ASSEMBLY.

UNIT VENTILATOR INSTALLATION DETAILS (UV-9 & UV-10)

4 N.T.S.

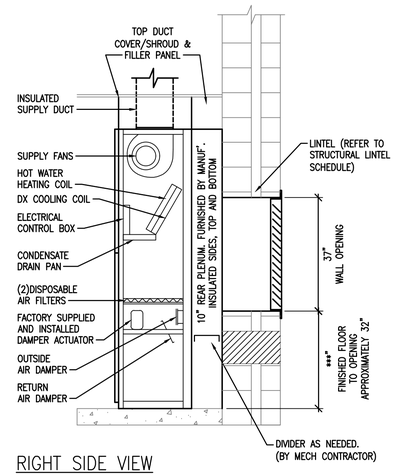

RIGHT SIDE VIEW

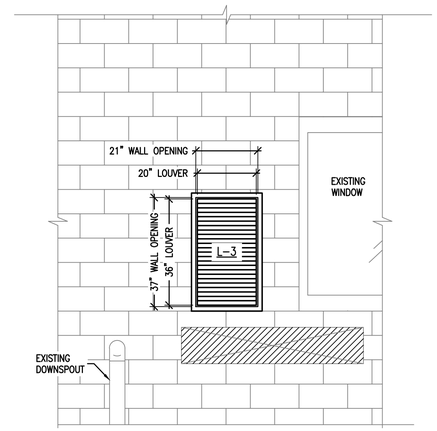

EXTERIOR VIEW

NOTES:
1. THE UNIT MUST BE INSTALLED PROPERLY ON LEVEL FLOOR SURFACE.
2. THE UNIT MUST BE LAGGED TO THE FLOOR.
3. REFER TO OWNER'S MANUAL/IOM INSTRUCTIONS FOR ADDITIONAL REQUIREMENTS.
4. WALL SLEEVE SHIPPED KNOCKED DOWN FOR FIELD ASSEMBLY.
5. ***FIELD MEASURE FOR EXACT LOUVER INSTALLATION HEIGHT.

UNIT VENTILATOR INSTALLATION DETAILS (UV-11)

3 N.T.S.

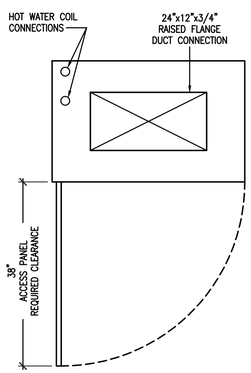

TOP VIEW

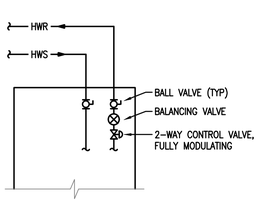

PIPING DIAGRAM

5 TYP
N.T.S.

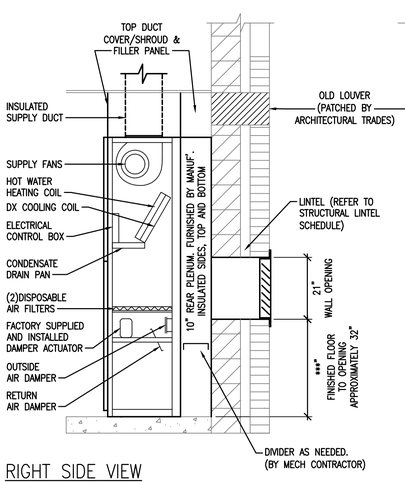

RIGHT SIDE VIEW

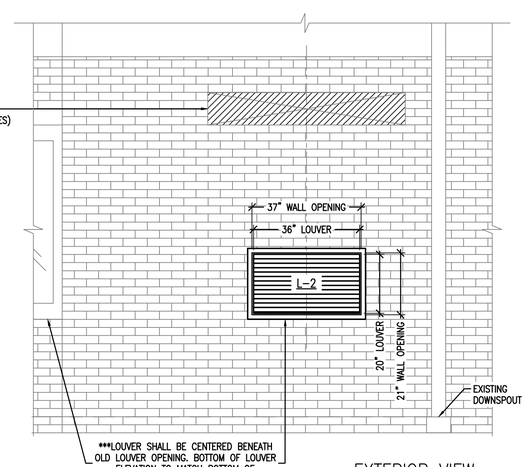

EXTERIOR VIEW

NOTES:
1. THE UNIT MUST BE INSTALLED PROPERLY ON LEVEL FLOOR SURFACE.
2. THE UNIT MUST BE LAGGED TO THE FLOOR.
3. REFER TO OWNER'S MANUAL/IOM INSTRUCTIONS FOR ADDITIONAL REQUIREMENTS.
4. WALL SLEEVE SHIPPED KNOCKED DOWN FOR FIELD ASSEMBLY.
5. ***FIELD MEASURE FOR EXACT LOUVER INSTALLATION HEIGHT.

UNIT VENTILATOR INSTALLATION DETAILS (UV-13)

2 N.T.S.

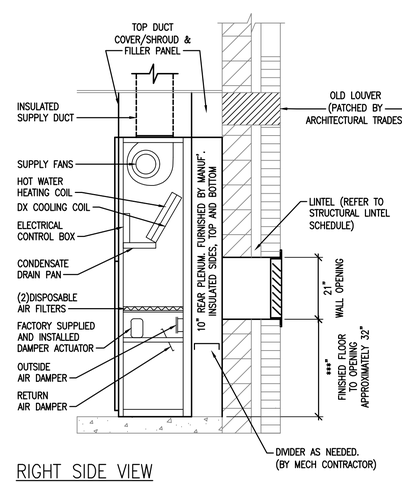

RIGHT SIDE VIEW

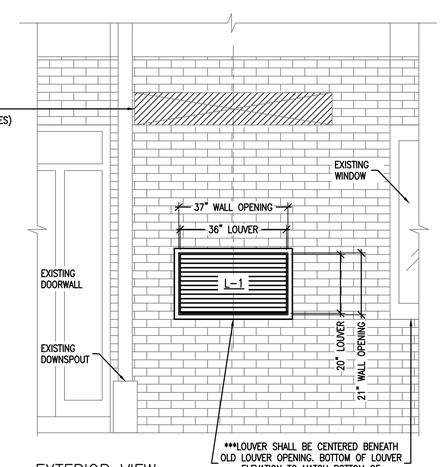

EXTERIOR VIEW

NOTES:
1. THE UNIT MUST BE INSTALLED PROPERLY ON LEVEL FLOOR SURFACE.
2. THE UNIT MUST BE LAGGED TO THE FLOOR.
3. REFER TO OWNER'S MANUAL/IOM INSTRUCTIONS FOR ADDITIONAL REQUIREMENTS.
4. WALL SLEEVE SHIPPED KNOCKED DOWN FOR FIELD ASSEMBLY.
5. ***FIELD MEASURE FOR EXACT LOUVER INSTALLATION HEIGHT.

UNIT VENTILATOR INSTALLATION DETAILS (UV-14)

1 N.T.S.

INTEGRATED DESIGNS INC.
ARCHITECTURE ENGINEERING CONSULTING
MARQUETTE OFFICE:
1021 W. BARAGA AVENUE
MARQUETTE, MI 49855
PHONE: (906)228-4400
FAX: (906)228-7524
BIRGHTON OFFICE:
601 CROSSWINDS OVER AVE., SUITE 600
BRIGHTON, MI 48116
PHONE: (810)229-2701
FAX: (810)229-4787

HARBOR BEACH COMMUNITY SCHOOLS
PHASE 1 - 2026 ADDITION & RENOVATIONS
HARBOR BEACH, MICHIGAN
PROJECT NO. 24-138

NO.	REVISIONS	DATE
B	DESIGN DEVELOPMENT	06.03.26
C	95% OWNER REVIEW	08.03.26
0	FOR CONSTRUCTION	08.28.26

	BY
DESIGN	CRP
DRAWN	CRP
CHECKED	SLB
APPROVED	SLB

MECHANICAL DETAILS

COPYRIGHT © 2026 INTEGRATED DESIGNS INC.

M3.2

PACKAGED ROOFTOP AIR-CONDITIONING UNIT SCHEDULE

SYM	SERVICE	SYSTEM TYPE	TOTAL AIRFLOW (CFM)	MINIMUM OUTSIDE AIRFLOW (CFM)	SUPPLY LOCATION	RETURN LOCATION	SUPPLY FAN E.S.P. (IN.WC.)	SUPPLY FAN FAN TYPE	SUPPLY FAN DRIVE TYPE	RETURN/EXHAUST FAN E.S.P. (IN.WC.)	RETURN/EXHAUST FAN FAN TYPE	RETURN/EXHAUST FAN DRIVE TYPE	RELIEF TYPE	HEATING COIL (NATURAL GAS) INPUT CAPACITY (MBH)	HEATING COIL (NATURAL GAS) OUTPUT CAPACITY (MBH)	HEATING COIL (NATURAL GAS) AIR EAT (DB°F)	HEATING COIL (NATURAL GAS) AIR LAT (DB°F)	HEATING COIL (NATURAL GAS) GAS PRESSURE MIN.–MAX. (IN WC)	HEATING COIL (NATURAL GAS) STAGES OR MODULATION TURNDOWN	HEATING COIL (NATURAL GAS) BURNER TYPE	HEATING COIL (NATURAL GAS) CONNECTION (IN)	COOLING COIL (DX) TOTAL CAPACITY (MBH)	COOLING COIL (DX) SENSIBLE CAPACITY (MBH)	COOLING COIL (DX) AIR EAT (DB°F)	COOLING COIL (DX) AIR EAT (WB°F)	COOLING COIL (DX) AIR LAT (DB°F)	COOLING COIL (DX) AIR LAT (WB°F)	COOLING COIL (DX) REFRIGERANT TYPE	COOLING COIL (DX) REFRIGERANT CHARGE (LBS)	FILTER	ELECTRICAL MCA	ELECTRICAL MROPD	ELECTRICAL VOLTS	ELECTRICAL PHASE	DISCONNECT FURNISH BY	DISCONNECT INSTALL BY	DISCONNECT TYPE	CURB (IN)	UNIT WEIGHT (LBS)	MANUFACTURER AND MODEL
RTU–1	OFFICE ADDITION	SINGLE ZONE VAV	1200	210	BOTTOM	BOTTOM	0.5	SWSI AF	DIRECT	0.5	SWSI AF	DIRECT	POWERED EXHAUST	80.0	64.8	52.0	101.8	5–14	5:1 MODULATING	INDIRECT	(1)3/4	37.1	31.3	79.3	65.0	54.3	54.3	R32 (A2L)	–	2" MERV 8 & 4" MERV 14	34.2	50	208	3	MANUF.	MANUF.	NON–FUSED SWITCH	24	1004	DAIKIN DPSC03B
RTU–2	MEDIA CENTER	VAV	7300	2323	SIDE	SIDE	1.0	SWSI AF	DIRECT	1.0	SWSI AF	DIRECT	POWERED EXHAUST	450	364.5	44.0	90	5–14	12:1 MODULATING	INDIRECT	(2)3/4*	259.8	205.9	81.4	66.5	54.3	54.3	R32 (A2L)	31.2	2" MERV 8 & 4" MERV 14	60.1	80	480	3	MANUF.	MANUF.	NON–FUSED SWITCH	N/A	4346	DAIKIN DPSC20B

NOTE:
1. PROVIDE WITH DEMAND CONTROL VENTILATION.
2. DDC READY FOR TEMPERATURE CONTROLS CONTRACTOR (TCC) PROVIDED AND FIELD MOUNTED CONTROLS.
3. PROVIDE WITH A2L REFRIGERANT LEAK DETECTION SYSTEM BY MANUFACTURER.
4. FACTORY FURNISHED, FIELD–WIRED (BY ELECTRICAL) GFI RECEPTACLE.
5. * THERE ARE TWO GAS CONNECTIONS INSIDE THE UNIT. SINGLE PIPE ENETERS UNIT AND SPLITS TO TWO MANIFOLDS. REFER TO MANUFACTURER INSTALLATION DETAILS.
6. RTU–1 SHALL BE FURNISHED AND INSTALLED WITH A 24" CURB.
7. RTU–2 SHALL BE PLACED WITHOUT CURB, DIRECTLY ONTO ROOF MOUNTED STRUCTURAL DUNNAGE. REFER TO STRUCTURAL PLANS AND DETAILS FOR ADDITIONAL INFORMATION.

UNIT VENTILATOR SCHEDULE

SYM	SERVICE	MOUNTING	TOTAL AIRFLOW (CFM)	MINIMUM OUTSIDE AIRFLOW (CFM)	FAN MOTOR HP	E.S.P. (IN WC)	HEATING COIL (HOT WATER) MINIMUM TOTAL CAPACITY (MBH)	HEATING COIL AIR EAT (DB°F)	HEATING COIL AIR LAT (DB°F)	HEATING COIL WATER (30% PROPYLENE GLYCOL) FLOW (GPM)	HEATING COIL WATER EWT (°F)	HEATING COIL WATER LWT (°F)	HEATING COIL WATER WPD (FT HD)	CONTROL VALVE CONFIG.	SUPPLY/RETURN CONNECTION (IN)	COOLING COIL (DX) TOTAL CAPACITY (MBH)	COOLING COIL (DX) SENSIBLE CAPACITY (MBH)	COOLING COIL (DX) AIR EAT (DB°F)	COOLING COIL (DX) AIR EAT (WB°F)	COOLING COIL (DX) AIR LAT (DB°F)	COOLING COIL (DX) AIR LAT (WB°F)	COOLING COIL (DX) REFRIGERANT TYPE	COOLING COIL (DX) REFRIGERANT LIQUID (IN)	COOLING COIL (DX) REFRIGERANT SUCTION (IN)	DIMENSIONS WIDTH (IN)	DIMENSIONS DEPTH (IN)	DIMENSIONS HEIGHT (IN)	FILTER	ELECTRICAL MCA	ELECTRICAL MOP	ELECTRICAL VOLTS	ELECTRICAL PHASE	DISCONNECT FURNISH BY	DISCONNECT INSTALL BY	DISCONNECT TYPE	UNIT WEIGHT (LBS)	NOTES	MANUFACTURER AND MODEL
UV–16	CLASSROOM C110	CEILING	1500	402	0.75	0.0	74.5	46.0	91.8	4.0	180	142.8	0.43	2–WAY	3/4	47.2	31.4	80.0	67.0	60.7	57.2	R32	1/2	3/4	100.0	36.0	16.62	(2)1" MERV 8	12.0	15	115	1	MANUF.	MANUF.	NON–FUSED SWITCH	620	1,2,3,4,5,8,9	DAIKIN UAHFKH15
UV–14	CLASSROOM 348	FLOOR	1250	441	0.5	0.5	67.2	44	91.3	3.5	180	139	0.43	2–WAY	3/4	40.4	35.0	80.6	63.6	54.2	52.0	R454B	3/8	3/4	39.75	25.0	91.0	(2)2" MERV 8	7.25	15	120	1	MANUF.	MANUF.	NON–FUSED SWITCH	750	1,2,3,4,5,6,7,8	CHANGEAIR FRESHMAN SERIES, CABINET B, CAH1000ARAVPDD2
UV–13	CLASSROOM 346	FLOOR	1250	467	0.5	0.5	67.2	44	91.3	3.5	180	139	0.43	2–WAY	3/4	40.4	35.0	80.6	63.6	54.2	52.0	R454B	3/8	3/4	39.75	25.0	91.0	(2)2" MERV 8	7.25	15	120	1	MANUF.	MANUF.	NON–FUSED SWITCH	750	1,2,3,4,5,6,7,8	CHANGEAIR FRESHMAN SERIES, CABINET B, CAH1000ARAVPDD2
UV–11	ART ROOM	FLOOR	1250	356	0.5	0.5	67.2	44	91.3	3.5	180	139	0.43	2–WAY	3/4	40.4	35.0	80.6	63.6	54.2	52.0	R454B	3/8	3/4	39.75	25.0	91.0	(2)2" MERV 8	7.25	15	120	1	MANUF.	MANUF.	NON–FUSED SWITCH	750	1,2,3,4,5,6,7,8	CHANGEAIR FRESHMAN SERIES, CABINET B, CAH1000ARAVPDD2
UV–10	CLASSROOM 126	FLOOR	1250	417	0.5	0.5	67.2	44	91.3	3.5	180	139	0.43	2–WAY	3/4	40.4	35.0	80.6	63.6	54.2	52.0	R454B	3/8	3/4	39.75	25.0	91.0	(2)2" MERV 8	7.25	15	120	1	MANUF.	MANUF.	NON–FUSED SWITCH	750	1,2,3,4,5,6,7,8	CHANGEAIR FRESHMAN SERIES, CABINET B, CAH1000ARAVPDD2
UV–9	CLASSROOM 124	FLOOR	1250	414	0.5	0.5	67.2	44	91.3	3.5	180	139	0.43	2–WAY	3/4	40.4	35.0	80.6	63.6	54.2	52.0	R454B	3/8	3/4	39.75	25.0	91.0	(2)2" MERV 8	7.25	15	120	1	MANUF.	MANUF.	NON–FUSED SWITCH	750	1,2,3,4,5,6,7,8	CHANGEAIR FRESHMAN SERIES, CABINET B, CAH1000ARAVPDD2

NOTES:
1. UNIT VENTILATOR NUMBERING IS BASED ON EXISTING PLAN NUMBERING. FIELD VERIFY AND COORDINATE WITH OWNER FOR NUMBERING IN FIELD.
2. PROVIDE WITH FACTORY MOUNTED AND WIRED DISCONNECT. SINGLE POINT POWER CONNECTION.
3. UNIT SHALL HAVE DEMAND CONTROL VENTILATION USING SPACE MOUNTED CO2 SENSOR.
4. DDC READY FOR TEMPERATURE CONTROLS CONTRACTOR (TCC) PROVIDED AND FIELD MOUNTED CONTROLS.
5. FURNISH WITH SOUND PACKAGE FOR REDUCED NOISE.
6. COOLING COIL FURNISHED FOR FUTURE CONNECTIONS.
7. PROVIDE WITH TOP DISCHARGE DUCT SHROUD AND 10" REAR EXTENSION, COLOR TO MATCH UNIT VENTILATOR.
8. REFER TO LOUVER SCHEDULE, M4.1, FOR ADDITIONAL INFORMATION.
9. FURNISH CONDENSATE PUMP, 115V, 1/50 HP, 1/2 GALLON, 10 FT HD, 25 GPM, LITTLE GIANT #VCMA–15ULS, OR EQUIVALENT.

CONDENSING UNIT SCHEDULE

SYM	ASSOC. INDOOR UNIT	NOMINAL TONNAGE	COMPRESSOR QTY.	COMPRESSOR TYPE	COMPRESSOR STAGES	REFRIGERANT TYPE	REFRIGERANT LIQUID (IN)	REFRIGERANT SUCTION (IN)	ELECTRICAL MCA	ELECTRICAL MOP	ELECTRICAL VOLTS	ELECTRICAL PHASE	DISCONNECT FURNISH BY	DISCONNECT INSTALL BY	DISCONNECT TYPE	UNIT WEIGHT (LBS)	MANUFACTURER AND MODEL
CU–1	UV–16	4	1	SCROLL	1	R32	3/8	7/8	7.9	10	460	3	ELEC.	ELEC.	NON–FUSED SWITCH	203	DAIKIN DC3SEA4840

NOTE:
1. INSTALL ON SQUARE COMPOSITE PAD, APPROXIMATELY 36" x 36" x 3".

PACKAGED, OUTDOOR, FIXED PLATE ENERGY RECOVERY UNIT SCHEDULE

SYM	TYPE	SERVICE	SUPPLY POSITION	EXHAUST POSITION	SUPPLY AIRFLOW (CFM)	SUPPLY AIRFLOW E.S.P. (IN.WC.)	EXHAUST AIRFLOW (CFM)	EXHAUST AIRFLOW E.S.P. (IN.WC.)	ENERGY CORE – SUMMER OUTSIDE AIR EAT (DB°F)	ENERGY CORE – SUMMER OUTSIDE AIR EAT (WB°F)	ENERGY CORE – SUMMER SUPPLY AIR LAT (DB°F)	ENERGY CORE – SUMMER SUPPLY AIR LAT (WB°F)	ENERGY CORE – WINTER OUTSIDE AIR EAT (DB°F)	ENERGY CORE – WINTER SUPPLY AIR LAT (DB°F)	FILTER	ELECTRICAL MCA	ELECTRICAL MOP	ELECTRICAL VOLTS	ELECTRICAL PHASE	DISCONNECT FURNISH BY	DISCONNECT INSTALL BY	DISCONNECT TYPE	WEIGHT (LBS)	MANUFACTURER AND MODEL
ERV–1	ROOF MOUNTED, CORE	ADDITION RESTROOMS	DOWN	DOWN	200	0.25	200	0.30	90.4	73.8	77.9	66.4	–10	54.7	2" MERV 8	2.6	15	208–230	1	MANUF.	MANUF.	NON–FUSED SWITCH	243	RENEWAIRE HE07–JRTV–S15EE
ERV–2	ROOF MOUNTED, CORE	ART ROOM	DOWN	DOWN	650	0.25	650	0.25	90.4	73.8	79.3	68.0	–10	47.6	2" MERV 8	3.9	15	208–230	1	MANUF.	MANUF.	NON–FUSED SWITCH	243	RENEWAIRE HE10–JRTV–S15EE

NOTE:
1. PROVIDE WITH ECM DIRECT DRIVE MOTORS, PREMIUM CONTROLS WITH BACNET COMPATIBILITY, MOTORIZED DAMPERS BOTH AIRSTREAMS, FILTER MONITORS, AND MINIMUM 14" CURB.
2. INSTALL WITH TIE–DOWNS/GUY WIRES OR SCREW UNIT TO CURB.

HYDRONIC PUMP SCHEDULE

SYM	SERVICE	TYPE	FLOW (GPM)	HEAD (FT)	RPM	IMPELLER (IN)	DISCHARGE SIZE (IN)	SUCTION SIZE (IN)	ELECTRICAL OPERATING POINT BHP	ELECTRICAL HP	ELECTRICAL VOLTS	ELECTRICAL PHASE	DISCONNECT FURN. BY	DISCONNECT INST. BY	DISCONNECT TYPE	MANUFACTURER AND MODEL
P–1	B–1	IN–LINE	192	14.5	1065	7.0	4.0	4.0	0.89	1.5	208	1	ELEC.	ELEC.	NON–FUSED SWITCH	BELL & GOSSETT e–80 4x4x7B

NOTES:
1. PUMPS SHALL BE NON–OVERLOADING.
2. PERFORMANCE IS BASED ON WATER.

ELECTRIC-RESISTANCE AIR COIL SCHEDULE

SYM	SERVICE	CAPACITY (KW)	STAGES	AIR CFM	AIR EDB (°F)	AIR LDB (°F)	DIMENSIONS WIDTH (IN)	DIMENSIONS HEIGHT (IN)	DIMENSIONS DEPTH (IN)	ELECTRICAL FLA	ELECTRICAL MCA	ELECTRICAL MOPD	ELECTRICAL VOLTS	ELECTRICAL PHASE	DISCONNECT FURN. BY	DISCONNECT INST. BY	DISCONNECT TYPE	MANUFACTURER AND MODEL
EHC–1	ERV–1	2	SINGLE	200	48	79.5	9.75	9.875	6.0	5.6	6.9	15	208	3	MANUF.	MANUF.	NON–FUSED SWITCH	RENEWAIRE EK–1010002SCCHR
EHC–2	ERV–2	5	SINGLE	650	48	72.2	11.75	11.875	6.0	13.9	17.35	20	208	3	MANUF.	MANUF.	NON–FUSED SWITCH	RENEWAIRE EK–1212005SCCVR

NOTES:
1. SLIP–IN MOUNT.
2. 24 VAC CONTROL VOLTAGE.
3. SCR CONTROL WITH THERMOSTAT AND SENSOR.

CONDENSING BOILER SCHEDULE

SYM	FUEL TYPE	GAS PRESSURE MIN–MAX (IN WG)	MIN. INPUT (MBH)	MAX. INPUT (MBH)	GROSS OUTPUT (MBH)	TURN–DOWN RATIO	CONNECTIONS FLUE SIZE (Ø, IN)	CONNECTIONS COMBUSTION AIR SIZE (Ø, IN)	CONNECTIONS WATER INLET SIZE (Ø, IN)	CONNECTIONS WATER OUTLET SIZE (Ø, IN)	CONNECTIONS GAS SIZE (Ø, IN)	FLUID MIN BOILER FLOW (GPM)	FLUID MAX BOILER FLOW (GPM)	FLUID DESIGN FLOW (GPM)	FLUID EWT (°F)	FLUID LWT (°F)	FLUID DESIGN WPD (FT HD)	FLUID MAX. FLOW WPD (FT HD)	ELECTRICAL MCA	ELECTRICAL VOLTS	ELECTRICAL PHASE	DISCONNECT FURN. BY	DISCONNECT INST. BY	DISCONNECT TYPE	MANUFACTURER AND MODEL
B–1	NATURAL GAS	4–14	80	1999	1923	25:1	8	8	4	4	1–1/2	25	350	192	150	180	–		1.5	120	1	ELEC.	ELEC.	NON–FUSED SWITCH	LOCHINVAR FBN 2001

NOTES:
1. PERFORMANCE IS BASED ON WATER WITH 30% PROPYLENE GLYCOL.
2. PROVIDE WITH CONDENSATE NEUTRALIZATION KIT.
3. PROVIDE WITH CSD–1 GAS TRAIN.
4. PROVIDE WITH FLOW SWITCH.

MARQUETTE OFFICE:
1021 W. BARGA AVENUE
MARQUETTE, MI 49855
PHONE: (906)228-4449
FAX: (906)228-7524

BIRCHTON OFFICE:
27101 CLINTON RIVER WAY, SUITE 600
BIRCHTON, MI 48036
PHONE: (810)229-2701
FAX: (810)229-6787

ARCHITECTURE ENGINEERING CONSULTING
INTEGRATED DESIGNS INC.

HARBOR BEACH COMMUNITY SCHOOLS
PHASE 1 - 2026 ADDITION & RENOVATIONS
HARBOR BEACH, MICHIGAN
PROJECT NO. 24-138

NO.	REVISIONS	BY	DATE
B	DESIGN DEVELOPMENT	CRP	06.03.26
C	95% OWNER REVIEW	CRP	08.03.26
0	FOR CONSTRUCTION	SLB	08.28.26

DESIGN CRP
DRAWN CRP
CHECKED SLB
APPROVED SLB

MECHANICAL SCHEDULES

COPYRIGHT © 2026 INTEGRATED DESIGNS INC.

M4.0

CABINET UNIT HEATER (HOT WATER) SCHEDULE

SYM	SERVICE	CAPACITY (MBH)	CFM	MOUNTING	AIR LOCATION			HEATING (WATER, 30% GLYCOL)				CONTROL VALVE CONFIG.	DIMENSIONS			ELECTRICAL		DISCONNECT			MANUFACTURER AND MODEL
					SUPPLY	RETURN	FRESH AIR	FLOW (GPM)	EWT (°F)	LWT (°F)	WPD (FT HD)		WIDTH (IN)	DEPTH (IN)	HEIGHT (IN)	MOP	VOLTS/ PHASE	FURNISH BY	INSTALL BY	TYPE	
CUH-1	VESTIBULE A101	19.8	300	WALL, HIDEAWAY	FRONT LOW	FRONT HIGH	N/A	1.1	180	150	0.4	2-WAY	2'-11 13/16"	2'-5 7/8"	10 3/8"	15	115/1	MANUF.	MANUF.	NON-FUSED SWITCH	DAIKIN FCVH-103A

NOTE
1. PROVIDE WITH WALL MOUNTED 24VAC ZONE SENSOR.
2. PROVIDE WITH 3-SPEED FANS.
3. PROVIDE WITH TIMED OVERRIDE.
4. PROVIDE DECORATIVE WALL PLATE

LOUVER SCHEDULE

SYM	SERVICE	AIRFLOW	MINIMUM FREE AREA	VELOCITY (FPM)	BEGINNING POINT OF WATER PENETRATION (FPM)	BLADE SPACING (IN)	FRONT BLADE ORIENTATION	STATIC PRESSURE DROP @ DESIGN CFM (IN.WC.)	WIDTH (IN)	HEIGHT (IN)	DEPTH (IN)	FLANGE (IN)	CONSTRUCTION	FINISH	MANUFACTURER AND MODEL
L-1	UV-14	450	50%	200	478	2	HORIZONTAL	0.0	36	20	2	1-1/2	EXTRUDED ALUMINUM	MILL	VENTEX 2215 (FURNISHED BY UV MANUFACTURER)
L-2	UV-13	450	50%	200	478	2	HORIZONTAL	0.0	36	20	2	1-1/2	EXTRUDED ALUMINUM	MILL	VENTEX 2215 (FURNISHED BY UV MANUFACTURER)
L-3	UV-11	450	50%	200	478	2	HORIZONTAL	0.0	20	36	2	1-1/2	EXTRUDED ALUMINUM	MILL	VENTEX 2215 (FURNISHED BY UV MANUFACTURER)
L-4	UV-10		50%				HORIZONTAL		45.25	37			EXTRUDED ALUMINUM	MILL	
L-5	UV-9		50%				HORIZONTAL		45.25	37			EXTRUDED ALUMINUM	MILL	

NOTES:
1. FURNISH WITH GALVANIZED BIRDSCREEN.
2. FIELD VERIFY FOR EXACT MEASUREMENTS.
3. L-4 & L-5 ARE INSET WITHIN AN EXISTING ALUMINUM WINDOW FRAMING.
4. FLANGED FRAME, MINIMUM 50% FREE AREA, EXTRUDED ALUMINUM, 2" DEEP, 30 DEGREE HORIZONTAL BLADES, CLEAR ANODIZED MILL FINISH, WITH GALVANIZED BIRD SCREEN, LOUVER BLADES PARALLEL TO HORIZONTAL DIMENSION

EXHAUST FAN SCHEDULE

SYM	SERVICE	TYPE	AIRFLOW (CFM)	E.S.P. (IN.WC.)	FAN RPM	DRIVE	ELECTRICAL					DISCONNECT			MANUFACTURER AND MODEL
							MCA	MOP	FLA	VOLTS	PHASE	FURNISH BY	INSTALL BY	TYPE	
EF-1	JANITOR 105B	CEILING	70	0.3	950	DIRECT	0.2	15	0.19	115	1	MANUF.	MANUF.	INTERNAL, PLUG-IN	GREENHECK SP-A110

NOTES:
1. FURNISH WITH BACNET CONTROLS, INTEGRATE WITH BUILDING AUTOMATION SYSTEM.

ELECTRIC HEATER SCHEDULE

SYM	SERVICE	TYPE	MBH	KW	DIMENSIONS		ELECTRICAL			MANUFACTURER AND MODEL
					WIDTH (IN)	LENGTH (IN)	AMPS	VOLTS	PHASE	
ERCP-1	A103 CONFERENCE/BOARD	RADIANT CEILING PANEL	2.6	0.75	12	48	6.2	115	1	QMARK CP SERIES
ERCP-2	A103 CONFERENCE/BOARD	RADIANT CEILING PANEL	2.6	0.75	12	48	6.2	115	1	QMARK CP SERIES
ERCP-3	A103 CONFERENCE/BOARD	RADIANT CEILING PANEL	2.6	0.75	12	48	6.2	115	1	QMARK CP SERIES
ERCP-4	A104 OFFICE	RADIANT CEILING PANEL	2.6	0.75	12	48	6.2	115	1	QMARK CP SERIES
ERCP-5	A105 FAMILY	RADIANT CEILING PANEL	2.6	0.75	12	48	6.2	115	1	QMARK CP SERIES
ERCP-6	A106 TOILET	RADIANT CEILING PANEL	2.6	0.75	12	48	6.2	115	1	QMARK CP SERIES
ERCP-7	A107 TOILET	RADIANT CEILING PANEL	2.6	0.75	12	48	6.2	115	1	QMARK CP SERIES
ERCP-8	A108 TOILET	RADIANT CEILING PANEL	2.6	0.75	12	48	6.2	115	1	QMARK CP SERIES

NOTE
1. FURNISH WITH RECESSED MOUNTING FRAME FOR GYPSUM BOARD CEILING INSTALLATIONS.
2. FURNISH WITH LINE VOLTAGE THERMOSTAT. THERMOSTAT SHALL HAVE BACNET INTEGRATION CAPABILITY.

VENTILATION SCHEDULE

SYM	SERVICE	AREA (SF)	OCCUPANCY CLASSIFICATION	OCCUPANT LOAD	REQUIRED OUTSIDE AIR RATE		
					CFM/ SF	CFM/ PERSON	TOTAL
RTU-1	A102 RECEPTION	394	RECEPTION	11	0.06	5	–
	A103 CONF/BOARD	304	CONFERENCE	16	0.06	5	–
	A104 OFFICE	278	RECEPTION	2	0.06	5	–
	A102 RECEPTION	394	RECEPTION	11	0.06	5	–
	A102 RECEPTION	394	RECEPTION	11	0.06	5	–
RTU-2	B116 MEDIA CENTER	4552	MEDIA CENTER	114	0.12	10	1687
	B117 CONFERENCE	254	CONFERENCE	13	0.06	5	81
	B118 OFFICE	109	OFFICE	1	0.06	5	12
	B119 STORAGE	109	STORAGE	0	0.12	0	14
	B120 WORK ROOM	266	OFFICE	2	0.06	5	26
	B121 GROUP VIEWING	259	MEDIA CENTER	7	0.12	10	102
	B122 DISTANCE LEARNING	837	CLASSROOM (AGE 9 PLUS)	30	0.12	10	401
						TOTAL =	2323
UV-16	CLASSROOM C110	846	CLASSROOM (AGE 9 PLUS)	30	0.12	10	402
UV-14	CLASSROOM 348	923	CLASSROOM (AGE 9 PLUS)	33	0.12	10	441
UV-13	CLASSROOM 346	975	CLASSROOM (AGE 9 PLUS)	35	0.12	10	467
UV-11	ART ROOM	920	ART CLASSROOM	19	0.18	10	356
UV-10	CLASSROOM 126	888	CLASSROOM (AGE 9 PLUS)	31	0.12	10	417
UV-9	CLASSROOM 124	861	CLASSROOM (AGE 9 PLUS)	31	0.12	10	414

GRILLE, REGISTER, DIFFUSER SCHEDULE

SYM	SERVICE	FACE SIZE (IN)	NECK SIZE (IN)	MOUNTING	COLOR	MATERIAL	TYPE	MANUFACTURER AND MODEL	REMARKS
A	SUPPLY	24x24	SEE PLANS	NOTE 1	WHITE	STEEL	SQUARE CONE	PRICE SCDA	ADJUSTABLE, 4-CONE
B	SUPPLY	12x12	SEE PLANS	NOTE 1	WHITE	STEEL	SQUARE CONE	PRICE SCDA	ADJUSTABLE, 3-CONE
C	SUPPLY/RETURN	24x24	SEE PLANS	NOTE 1	WHITE	STEEL	PERFORATED	PRICE PDDR	–
D	RETURN	12x12	SEE PLANS	NOTE 1	WHITE	STEEL	PERFORATED	PRICE PDDR	–

NOTES:
1. REFER TO ARCHITECTURAL CEILING PLAN AND COORDINATE FRAME TYPE ACCORDINGLY.

*CAPTIVEAIRE HOME EC EQUIPMENT SCHEDULE

MAKEUP-AIR UNIT		EXHAUST FAN		EXHAUST HOOD	
SYM	MANUFACTURER AND MODEL	SYM	MANUFACTURER AND MODEL	SYM	MANUFACTURER AND MODEL
MAU-1	CAPTIVEAIRE CAS-HVAC4-1.700-30-30T-DOAS	KEF-1	CAPTIVEAIRE DU85HFA	HOOD-1	CAPTIVEAIRE 5424 ND-2WI
		KEF-2	CAPTIVEAIRE DU180HFA	HOOD-2	CAPTIVEAIRE 5424 ND-2WI
		KEF-3	CAPTIVEAIRE DU180HFA	HOOD-3	CAPTIVEAIRE 5424 ND-2WI
		KEF-4	CAPTIVEAIRE DU85HFA	HOOD-4	CAPTIVEAIRE 3650 BD-2

*REFER TO CAPTIVEAIRE SHEETS FURNISHED WITH THIS PLAN SET.
ALL EQUIPMENT SHALL BE INTEGRATED WITH THE SCHOOL'S
BUILDING AUTOMATION SYSTEM WITH BACNET CAPABILITY.

MARQUETTE OFFICE:
1021 W. BARAGA AVENUE
MARQUETTE, MI 49855
PHONE: (906)228-4483
FAX: (906)228-7324

BIRGHTON OFFICE:
401 EAST GRAND RIVER AVE., SUITE 600
BRIGHTON, MI 48116
PHONE: (810)229-2701
FAX: (810)229-4787

INTEGRATED DESIGNS INC.
ARCHITECTURE ENGINEERING CONSULTING

HARBOR BEACH COMMUNITY SCHOOLS
PHASE 1 - 2026 ADDITION & RENOVATIONS
HARBOR BEACH, MICHIGAN
PROJECT NO. 24-138

NO.	REVISIONS	DATE
B	DESIGN DEVELOPMENT	06.03.26
C	95% OWNER REVIEW	08.03.26
0	FOR CONSTRUCTION	08.28.26

	BY
DESIGN	CRP
DRAWN	CRP
CHECKED	SLB
APPROVED	SLB

MECHANICAL SCHEDULES

COPYRIGHT © 2026 INTEGRATED DESIGNS INC.

M4.1

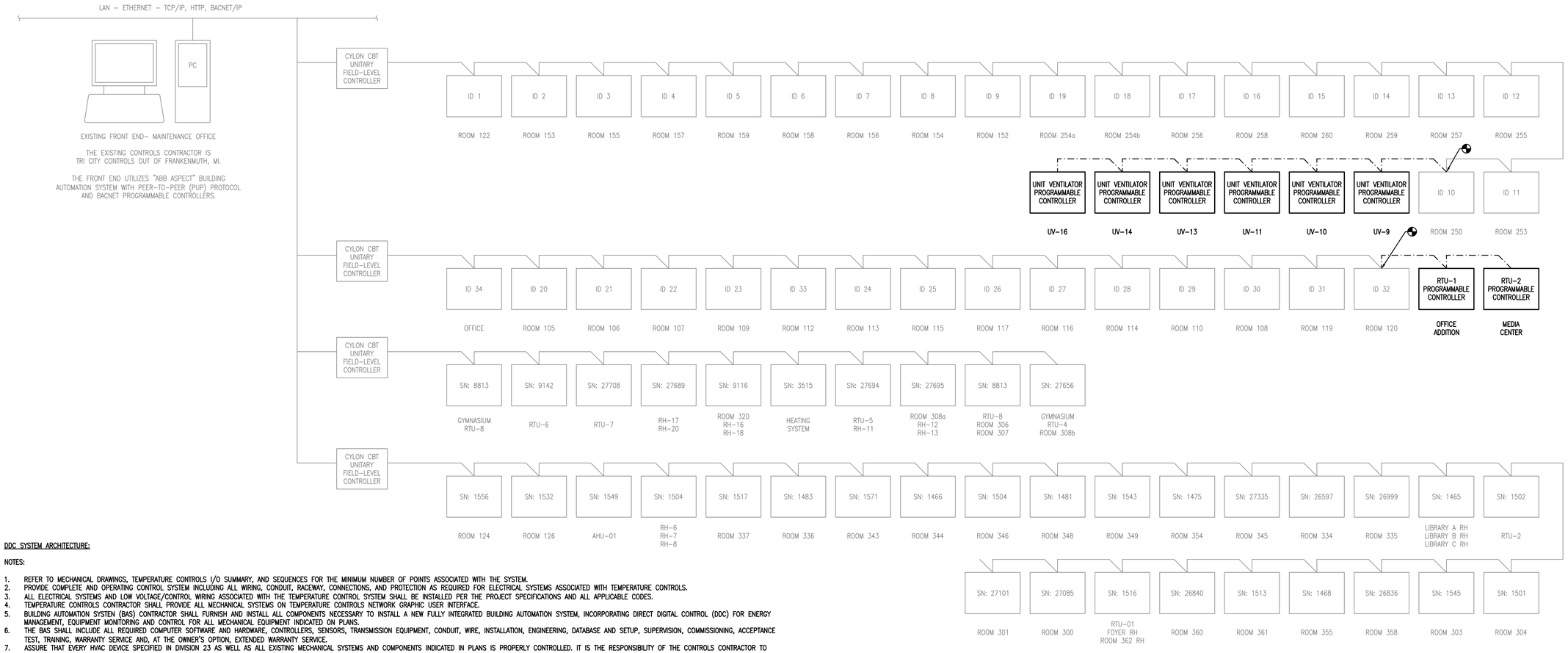

NEW BUILDING MANAGEMENT SYSTEM RISER DIAGRAM

NTS

DDC SYSTEM ARCHITECTURE:

NOTES:

1. REFER TO MECHANICAL DRAWINGS, TEMPERATURE CONTROLS I/O SUMMARY, AND SEQUENCES FOR THE MINIMUM NUMBER OF POINTS ASSOCIATED WITH THE SYSTEM.
2. PROVIDE COMPLETE AND OPERATING CONTROL SYSTEM INCLUDING ALL WIRING, CONDUIT, RACEWAY, CONNECTIONS, AND PROTECTION AS REQUIRED FOR ELECTRICAL SYSTEMS ASSOCIATED WITH TEMPERATURE CONTROLS.
3. ALL ELECTRICAL SYSTEMS AND LOW VOLTAGE/CONTROL WIRING ASSOCIATED WITH THE TEMPERATURE CONTROL SYSTEM SHALL BE INSTALLED PER THE PROJECT SPECIFICATIONS AND ALL APPLICABLE CODES.
4. TEMPERATURE CONTROLS CONTRACTOR SHALL PROVIDE ALL MECHANICAL SYSTEMS ON TEMPERATURE CONTROLS NETWORK GRAPHIC USER INTERFACE.
5. BUILDING AUTOMATION SYSTEN (BAS) CONTRACTOR SHALL FURNISH AND INSTALL ALL COMPONENTS NECESSARY TO INSTALL A NEW FULLY INTEGRATED BUILDING AUTOMATION SYSTEM, INCORPORATING DIRECT DIGITAL CONTROL (DDC) FOR ENERGY MANAGEMENT, EQUIPMENT MONITORING AND CONTROL FOR ALL MECHANICAL EQUIPMENT INDICATED ON PLANS.
6. THE BAS SHALL INCLUDE ALL REQUIRED COMPUTER SOFTWARE AND HARDWARE, CONTROLLERS, SENSORS, TRANSMISSION EQUIPMENT, CONDUIT, WIRE, INSTALLATION, ENGINEERING, DATABASE AND SETUP, SUPERVISION, COMMISSIONING, ACCEPTANCE TEST, TRAINING, WARRANTY SERVICE AND, AT THE OWNER'S OPTION, EXTENDED WARRANTY SERVICE.
7. ASSURE THAT EVERY HVAC DEVICE SPECIFIED IN DIVISION 23 AS WELL AS ALL EXISTING MECHANICAL SYSTEMS AND COMPONENTS INDICATED IN PLANS IS PROPERLY CONTROLLED. IT IS THE RESPONSIBILITY OF THE CONTROLS CONTRACTOR TO FURNISH AND INSTALL ALL HARDWARE, SOFTWARE, RELAYS, AND PROGRAMMING NECESSARY TO ASSURE INTEROPERABILITY BETWEEN HVAC SYSTEMS, EQUIPMENT, OR DEVICES.
8. PROVIDE ALL VALVES (INSTALLED BY MECHANICAL CONTRACTOR), VALVE ACTUATORS, DAMPER ACTUATORS, SENSORS, AND OTHER END DEVICES AND SENSORS AS MAY BE NECESSARY TO PROVIDE COMPLETE CONTROL AND SUPERVISION OF THE FUNCTIONS INDICATED. DELIVER TO HVAC OR APPROPRIATE INSTALLERS FOR FIELD INSTALLATION.
9. CONTROLS SYSTEM SHALL BE COMPLETE WITH DYNAMIC GRAPHICS PACKAGE THAT CAN BE ACCESSED FROM ANY NETWORKED WORKSTATION UTILIZING A STANDARD WEB BROWSER FOR ALL SYSTEMS BEING INSTALLED UNDER THIS WORK.
10. INTEGRATION OF ALL FACILITIES BAS CONTROLS ONTO A SINGLE OPEN–PROTOCOL CONTROLS PLATFORM IS REQUIRED UNLESS WRITTEN APPROVAL IS OBTAINED IN ADVANCE OF THE CONTROLS WORK BEING PERFORMED.
11. LOG ON TO ACCESS PROGRAMMING FUNCTIONS, SET–POINT AND TIME SCHEDULING FUNCTIONS, TREND LOGS, AND OTHER CONTROL FUNCTIONS SHALL BE INTERNET ACCESSIBLE FROM ANY COMPUTER OR WEB PORTAL DEVICE INDEPENDENTLY OF THE CLIETS' OWN "SECURE INTERNET" NETWORK. WORK CLOSELY WITH THE CLIENTS' IT OVERSIGHT PERSON WHEN PREPARING THE CONTROLS NETWORK ARCHITECTURE.
12. PROVIDE OPEN–COMMUNICATION PROTOCOL, GRAPHICS AND ALL SYSTEM CONTROLS COMPONENTS FOR ALL BAS SYSTEM CONTROLS BEING INSTALLED THROUGHOUT THE DISTRICT.

UNIT VENTILATOR (UV–TYP)

1. UNOCCUPIED MODE OR WARM–UP:
   - 1.1. WHEN ROOM TEMPERATURE IS BELOW SPACE SET POINT, OUTSIDE AND RELIEF DAMPERS ARE TO BE CLOSED.
   - 1.2. SUPPLY AIR FAN SHALL CYCLE ON AT FULL SPEED TO SATISFY SPACE TEMPERATURE AND THE UNIT VENTILATOR HEATING CONTROL VALVE SHALL OPEN 100% TO OPERATE AT FULL HEATING CAPACITY.
   - 1.3. HEATING VALVE SHALL REMAIN OPEN AT MINIMUM OF 50% WHEN FAN IS OFF DURING OCCUPIED PERIODS AND OUTSIDE AIR TEMPERATURE IS BELOW 35 DEG. F (ADJ).
2. OCCUPIED MODE:
   - 2.1. FAN SHALL OPERATE CONTINUOUSLY. ECM FAN SPEED SHALL VARY FROM HIGH SPEED IN MORNING WARM–UP TO LOW SPEED AS ROOM TEMPERATURE APPROACHES 1 DEG. F OF ROOM SET–POINT.
   - 2.2. OUTSIDE/RETURN AND RELIEF DAMPERS SHALL BE POSITIONED TO SATISFY SPACE CO2 AND ROOM TEMPERATURE SENSOR (ECONOMIZER COOLING WHEN ROOM EXCEEDS 5 DEG. F (ADJ.) ABOVE ROOM HEATING SET–POINT.
   - 2.3. HEATING VALVE SHALL MODULATE TO SATISFY THE ROOM TEMPERATURE SET–POINT. MODULATE VALVE CLOSED AS ROOM SET–POINT IS ACHIEVED BUT USE SUPPLY AIR TEMPERATURE SET–POINT OF 65 DEG. F (ADJ.) AS THE MINIMUM ALLOWABLE SUPPLY AIR TEMPERATURE UNTIL ROOM TEMPERATURE IS 5 DEG. ABOVE SET–POINT BEFORE CLOSING HEATING VALVE COMPLETELY.
3. ECONOMIZER OPERATION:
   - 3.1. AS SPACE TEMPERATURE INCREASES, OUTSIDE AND RELIEF AIR DAMPERS SHALL BE POSITIONED TO INTRODUCE THE MINIMUM AMOUNT OF OUTSIDE AIR REQUIRED FOR VENTILATION, AND THE HEATING COIL VALVE SHALL MODULATE CLOSED AS DESCRIBED ABOVE.
   - 3.2. WITH OUTSIDE AIR BELOW 55 DEG. F (ADJ.), AS SPACE TEMPERATURE RISES TO A SET–POINT OF 5 DEG. F ABOVE ROOM SET–POINT, THE OUTSIDE/RETURN AND RELIEF DAMPERS SHALL BEGIN TO SLOWLY MODULATE OPEN. AT NO POINT SHOULD SUPPLY AIR TEMPERATURE DROP BELOW 60 DEG. F (ADJ.).
   - 3.3. DAMPER ACTUATION DELAY SHALL BE UP TO 30 MINUTES (ADJ.) BETWEEN MINIMUM DAMPER POSITION AND FULLY OPEN WHEN OUTSIDE AIR TEMPERATURE IS BELOW 55 DEG. F (ADJ.).
   - 3.4. WITH OUTSIDE AIT ABOVE 55 DEG. F (ADJ.) MODULATE OUTSIDE AND RELIEF AIR DAMPERS OPEN, RETURN DAMPER CLOSED UNTIL THE DAMPERS ARE POSITIONED TO INTRODUCE 100% OUTSIDE AIR AND THE UNIT DELIVERS FULL NATURAL COOLING ABILITY.
4. LOW TEMPERATURE LIMIT CONTROL:
   - 4.1. A LOW LIMIT THERMOSTAT SHALL BE LOCATED DOWNSTREAM OF THE HEATING COIL TO PREVENT DISCHARGE TEMPERATURE FROM FALLING BELOW A PREDETERMINED SET–POINT OF 35 DEG. F (ADJ.). WHEN SUPPLY AIR ACROSS THE HEATING COIL FALLS BELOW SET–POINT, THE LOW–LIMIT STAT SHALL OVERRIDE THE SIGNAL FROM THE SPACE TEMPERATURE SENSOR OPENING THE HEATING VALVE AND CLOSING THE OUTSIDE/RELIEF AIR DAMPERS.
5. CARBON DIOXIDE CONTROL (CO2):
   - 5.1. WITH THE SPACE TEMPERATURE SATISFIED, THE HEATING VALVE CLOSED AND THE OUTSIDE AIR TEMPERATURE BELOW 50 DEG. F (ADJ.), IF CO2 LEVELS RISE ABOVE 2000 PPM, SLOW THE PID ON THE CO2 SO THAT THE DAMPER OPENS VERY SLOW AND ALLOW THE HEATING COIL VALVE OPPORTUNITY TO OPEN PREVENTING A RUSH OF COLD AIR INTO THE ROOM.

BAS INPUT/OUTPUT SUMMARY FORM

PROJECT: HARBOR BEACH COMMUNITY SCHOOLS

		HARDWARE POINTS				3RD PARTY INTEGRATION POINTS		GRAPHICAL USER INTERFACE			
		ANALOG		DIGITAL							
SYM.	POINT DESCRIPTION	INPUT	OUTPUT	INPUT	OUTPUT	ISSUED	AQUIRED	DISPLAY	ADJUST.	ALARM	NOTES
UV (TYP)	SUPPLY FAN STATUS			X				X		X	
	SUPPLY FAN START/STOP				X			X			
	SUPPLY FAN SPEED		X					X	X		
	MIXED AIR DAMPER COMMAND		X					X	X		
	DISCHARGE AIR TEMPERATURE	X						X			
	FREEZE STAT STATUS			X				X		X	
	HEATING COIL VALVE COMMAND		X					X	X		
	SPACE TEMPERATURE LOCAL SETPOINT ADJUSTMENT	X						X			WITH PUSHBUTTON OVERRIDE
	SPACE CARBON DIOXIDE CONCENTRATION	X						X		X	
	SPACE TEMPERATURE SETPOINT							X	X		WITH UNOCCUPIED SETPOINT INPUT AND ADJUSTMENT
	SPACE CARBON DIOXIDE CONCENTRATION SETPOINT							X	X		
	OCCUPANCY SCHEDULE							X	X		
	RELIEF AIR MOTORIZED DAMPER		X								INTERLOCKED WITH MIXED AIR DAMPER COMMAND

MARQUETTE OFFICE:
1021 W. BARAGA AVENUE
MARQUETTE, MI 49855
PHONE: (906)228-4449
FAX: (906)228-7524

BRIGHTON OFFICE:
8100 GRAND RIVER AVE., SUITE 600
BRIGHTON, MI 48116
PHONE: (810)229-2701
FAX: (810)229-6787

INTEGRATED DESIGNS INC.
ARCHITECTURE ENGINEERING CONSULTING

HARBOR BEACH COMMUNITY SCHOOLS
PHASE 1 - 2026 ADDITION & RENOVATIONS
HARBOR BEACH, MICHIGAN
PROJECT NO. 24-138

NO.	REVISIONS	DATE
0	FOR CONSTRUCTION	08.28.26

	BY
DESIGN	CRP
DRAWN	CRP
CHECKED	SLB
APPROVED	SLB

TEMPERATURE CONTROLS

COPYRIGHT © 2026 INTEGRATED DESIGNS INC.

M5.0

PACKAGED GAS HEATING ROOFTOP UNITS, SINGLE ZONE, VAV (RTU-1)

1. DDC READY FOR TEMPERATURE CONTROLS CONTRACTOR (TCC) PROVIDED AND FIELD MOUNTED CONTROLS.
2. WITH THE SUPPLY FAN VARIABLE SPEED DRIVE HAND/OFF/AUTO SWITCH IN THE "AUTO" POSITION, THE FAN SHALL BE AUTOMATICALLY STARTED/STOPPED THROUGH THE BAS BASED ON THE OPTIMUM START PROGRAM AND THE OCCUPANCY SCHEDULE.
3. FAN SHALL OPERATE CONTINUOUSLY DURING OCCUPIED PERIODS AND ONLY ON A CALL FOR HEAT DURING OCCUPIED PERIODS.
4. EXCEPT FOR ECONOMIZER COOLING, THE OUTSIDE AND RELIEF AIR DAMPERS SHALL BE KEPT AT A MINIMUM POSITION. MINIMUM DAMPER POSITION SHALL BE DETERMINED BY THE CARBON DIOXIDE (CO2) SENSOR OR THE AMOUNT OF AIR NECESSARY TO SATISFY CONSTANT OCCUPIED EXHAUST REQUIREMENTS, WHICHEVER IS GREATER.
5. WHEN THE SYSTEM IS IN HEATING MODE THE OUTSIDE, RETURN, AND RELIEF DAMPERS SHALL MODULATE IN SEQUENCE TO INTRODUCE THE MINIMUM OUTSIDE AIR AS DETERMINED BY THE CO2 SENSOR. HEATING COIL VALVE SHALL MODULATE OPEN TO SATISFY ZONE THERMOSTAT.
6. IF THE LOW TEMPERATURE PROTECTION THERMOSTAT DOWNSTREAM OF THE HEATING COIL SENSES TEMPERATURES BELOW ITS SET-POINT IT WILL SHUT DOWN THE UNIT AND OPEN THE HEATING COIL VALVE FULLY. THE LOWER LIMIT THERMOSTAT MUST BE MANUALLY RESET.
7. CARBON DIOXIDE CONTROL (CO2):
   - 7.1. WITH THE SPACE TEMPERATURE SATISFIED, THE HEATING VALVE CLOSED AND THE OUTSIDE AIR TEMPERATURE BELOW 50 DEG. F (ADJ.), IF CO2 LEVELS RISE ABOVE 2000 PPM, SLOW THE PID ON THE CO2 SO THAT THE DAMPER OPENS VERY SLOW AND ALLOW THE HEATING COIL VALVE OPPORTUNITY TO OPEN PREVENTING A RUSH OF COLD AIR INTO THE ROOM.

BAS INPUT/OUTPUT SUMMARY FORM

PROJECT: HARBOR BEACH COMMUNITY SCHOOLS

		HARDWARE POINTS				3RD PARTY INTEGRATION POINTS		GRAPHICAL USER INTERFACE			
		ANALOG		DIGITAL							
SYM.	POINT DESCRIPTION	INPUT	OUTPUT	INPUT	OUTPUT	ISSUED	AQUIRED	DISPLAY	ADJUST.	ALARM	NOTES
RTU-1	SUPPLY FAN STATUS			X				X		X	
	SUPPLY FAN START/STOP				X			X			
	SUPPLY FAN SPEED		X					X	X		
	EXHAUST FAN STATUS			X				X		X	
	EXHAUST FAN START/STOP				X			X			
	EXHAUST FAN SPEED		X					X	X		
	MIXED AIR TEMPERATURE	X						X			
	DISCHARGE AIR TEMPERATURE	X						X			
	FREEZE STAT STATUS			X				X		X	
	HEATING COIL VALVE COMMAND		X					X	X		
	SPACE TEMPERATURE LOCAL SETPOINT ADJUSTMENT	X						X			WITH PUSHBUTTON OVERRIDE
	SPACE CARBON DIOXIDE CONCENTRATION	X						X		X	
	SPACE TEMPERATURE SETPOINT							X	X		WITH UNOCCUPIED SETPOINT INPUT AND ADJUSTMENT
	SPACE CARBON DIOXIDE CONCENTRATION SETPOINT							X	X		
	OCCUPANCY SCHEDULE							X	X		

ENERGY RECOVERY VENTILATOR (ERV-1, ERV-2) AND DUCT HEATING COIL (EHC-1, EHC-2)

1. UNITS SHALL BE FACTORY FURNISHED WITH A BACNET COMPATIBLE CONTROLLER. CONTROLS CONTRACTOR SHALL INTEGRATE CONTROLLER TO THE BAS TO PROVIDE THE CONTROL SEQUENCE FUNCTIONS DESCRIBED.
2. SUPPLY AND RETURN FANS SHALL BE OPERATED BY AN OCCUPIED SCHEDULE.
3. TWO-POSITION DAMPERS IN THE OUTSIDE AIR DUCT AND EXHAUST DUCT SHALL OPEN UPON A START SIGNAL FROM THE BAS CONTROLS. WHEN FANS ARE PROVEN OPEN BY AN END SWITCH, SUPPLY AND RETURN FANS SHALL BE ALLOWED TO START.
4. DURING OCCUPIED PERIODS, THE ERV FANS SHALL RUN CONTINUOUSLY. DURING UNOCCUPIED PERIODS FANS SHALL REMAIN OFF.
5. ALL FAN START/STOP FUNCTION AND MOTOR CURRENT SENSOR PROOF OF FLOW SHALL BE THROUGH BAS CONTROLS.
6. DUCT SMOKE DETECTORS LOCATED IN THE SUPPLY AND RETURN DUCT WILL STOP THE UNIT FANS IF SMOKE IS SENSED. SMOKE DETECTORS MUST BE MANUALLY RESET.
7. SPACE TEMPERATURE SENSORS SHALL MAINTAIN SPACE TEMPERATURE BY MODULATING THE HEATING WATER CONTROL VALVE SERVING THE DUCT HEATING COILS IN THE SUPPLY AIR DUCT.
8. DISCHARGE AIR TEMPERATURE SENSORS LOCATED DOWNSTREAM OF THE HEATING COILS SHALL OVERRIDE THE SPACE TEMPERATURE SENSOR AND MAINTAIN A MINIMUM DISCHARGE AIR TEMPERATURE OF 50 F (ADJ.).
9. AN AVERAGING ELEMENT TYPE FREEZESTAT ON THE DISCHARGE OF THE HEATING COIL SHALL SHUT DOWN THE ERV FANS AND OPEN THE HEATING VALVE TO 100% WHENEVER THE DISCHARGE AIR TEMPERATURE DROPS BELOW 40 F (ADJ).

BAS INPUT/OUTPUT SUMMARY FORM

PROJECT: HARBOR BEACH COMMUNITY SCHOOLS

		HARDWARE POINTS				3RD PARTY INTEGRATION POINTS		GRAPHICAL USER INTERFACE			
		ANALOG		DIGITAL							
SYM.	POINT DESCRIPTION	INPUT	OUTPUT	INPUT	OUTPUT	ISSUED	AQUIRED	DISPLAY	ADJUST.	ALARM	NOTES
ERV-1 ERV-2	UNIT ENABLE/DISABLE					X		X			
	FILTER ALARM					X		X			
	ISOLATION DAMPER CONTROL					X		X			
	SUPPLY FAN ONLY MODULATION (ECM)					X		X			
	EXHAUST FAN ONLY MODULATION (ECM)					X		X			
	INTERNAL TIME CLOCK					X		X			
	MICROPROCESSOR CONTROLLER					X		X			
	SUPPLY AND EXHAUST AIR TEMPERATURE					X		X			
	OUTSIDE AND RETURN AIR TEMPERATURE AND HUMIDITY					X		X			
	FAN STATUS					X		X			
	ENABLE SUPPLY FAN ONLY					X		X			
	ENABLE EXHAUST FAN ONLY					X		X			
	DATA TRENDING					X		X			
	OUTSIDE AIRFLOW RATE					X		X			
	EXHAUST AIRFLOW RATE					X		X			
	HEATING ENABLE					X		X			
	HEATING MODULATION					X		X			
EHC-1 EHC-2	HEATING COIL VALVE COMMAND		X					X	X		
	DISCHARGE AIR TEMPERATURE	X						X			
	SPACE TEMPERATURE LOCAL SETPOINT ADJUSTMENT	X						X	X		
	SPACE TEMPERATURE SETPOINT							X	X		
	OCCUPANCY SCHEDULE							X	X		

CABINET UNIT HEATER (CUH-1)

1. THROUGH THE UNIT'S BACNET THERMOSTAT, THE UNIT SHALL BE PUT INTO "OCCUPIED" AND "UNOCCUPIED" MODE THROUGH THE DDC SYSTEM OCCUPANCY SCHEDULE.
2. OCCUPIED OPERATION: THE BACNET THERMOSTAT SHALL MODULATE THE HEATING CONTROL VALVE OPEN UPON A CALL FOR HEATING TO MAINTAIN THE DESIRED ROOM TEMPERATURE WHEN THE OUTSIDE AIR TEMPERATURE IS LESS THAN 60°F (ADJ). WHEN THE AQUASTAT SENSES HOT WATER, THE SUPPLY FAN SHALL BE ENERGIZED. WHEN THE ROOM TEMPERATURE SENSOR SETPOINT IS REACHED, THE HHW COIL CONTROL VALVE SHALL CLOSE AND THE UNIT HEATER FAN SHALL BE CYCLED OFF.
3. UNOCCUPIED OPERATION: DURING UNOCCUPIED PERIODS, THE CONTROL SHALL BE THE SAME BUT WITH LOWER ROOM TEMPERATURE SETPOINTS.
4. WHEN OUTSIDE AIR TEMPERATURE IS ABOVE 60 DEGREES F, THE BMS SHALL BE ABLE TO REMOTELY DE-ENERGIZE EQUIPMENT THROUGH A CONTROL RELAY ON ITS POWER CIRCUIT.
5. IF ROOM TEMP FALLS BELOW 37 DEGREES F, AN ALARM WILL BE SENT TO THE BMS.
6. HAND/OFF/AUTO SWITCH SHALL ALLOW LOCAL FAN SPEED ADJUSTMENT.
7. THE DDC SYSTEM SHALL MONITOR AND GRAPHICALLY SHOW THE FOLLOWING POINTS:
   - 7.1. SPACE TEMPERATURE
   - 7.2. SYSTEM MODE
   - 7.3. FAN STATUS
   - 7.4. ALARMS
8.

BAS INPUT/OUTPUT SUMMARY FORM

PROJECT: HARBOR BEACH COMMUNITY SCHOOLS

		HARDWARE POINTS				3RD PARTY INTEGRATION POINTS		GRAPHICAL USER INTERFACE			
		ANALOG		DIGITAL							
SYM.	POINT DESCRIPTION	INPUT	OUTPUT	INPUT	OUTPUT	ISSUED	AQUIRED	DISPLAY	ADJUST.	ALARM	NOTES
CUH-1	SUPPLY FAN STATUS			X				X		X	
	SUPPLY FAN START/STOP				X			X			
	HEATING COIL VALVE COMMAND		X					X	X		
	SPACE TEMPERATURE LOCAL SETPOINT ADJUSTMENT	X						X			WITH PUSHBUTTON OVERRIDE
	SPACE TEMPERATURE SETPOINT							X	X		WITH UNOCCUPIED SETPOINT INPUT AND ADJUSTMENT
	OCCUPANCY SCHEDULE							X	X		

MARQUETTE OFFICE:
1021 W. BARAGA AVENUE
MARQUETTE, MI 49855
PHONE: (906)228-4400
FAX: (906)228-7524

BIRGHTON OFFICE:
8101 GRAND RIVER AVE., SUITE 600
BRIGHTON, MI 48116
PHONE: (810)229-2701
FAX: (810)229-6787

INTEGRATED DESIGNS INC.
ARCHITECTURE ENGINEERING CONSULTING

HARBOR BEACH COMMUNITY SCHOOLS
PHASE 1 - 2026 ADDITION & RENOVATIONS
HARBOR BEACH, MICHIGAN
PROJECT NO. 24-138

NO.	REVISIONS	DATE
0	FOR CONSTRUCTION	08.28.26

	BY
DESIGN	CRP
DRAWN	CRP
CHECKED	SLB
APPROVED	SLB

TEMPERATURE CONTROLS

COPYRIGHT © 2026 INTEGRATED DESIGNS INC.

M5.1

KEY PLAN

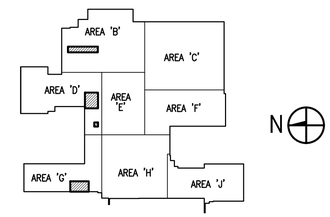

KEYNOTES

1. COORDINATE TRENCHING OF FLOOR SLAB FOR NEW FLOOR DRAIN INSTALLATION. FIELD VERIFICATION/EXPLORATORY DIGGING WILL BE REQUIRED FOR CONNECTION TO EXISTING SANITARY DRAIN.
2. REMOVE SINK. DISCONNECT CW AND HW AND REMOVE SHUTOFF VALVES AND PIPING BACK TO WALL AND PREP FOR NEW CONNECTIONS. REMOVE ALL WASTE PIPING AND PLASTER TRAP. SAVE SECTION OF WASTE PIPE THROUGH FLOOR FOR RECONNECTION.
3. REMOVE SINK AND FAUCET COMPLETE. REMOVE CW AND HW BRANCH PIPING BACK TO VERTICAL FEED AT WALL AND PREP FOR RECONNECTION.
4. REMOVE SECTIONS OF CW, HW, AND HWR AS SHOWN.
5. REPLACE FAUCET.

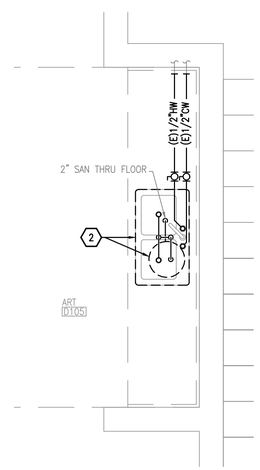

PLUMBING DEMOLITION PLAN
AREA 'D' (ART)
3 SCALE: 1/2" = 1'-0"

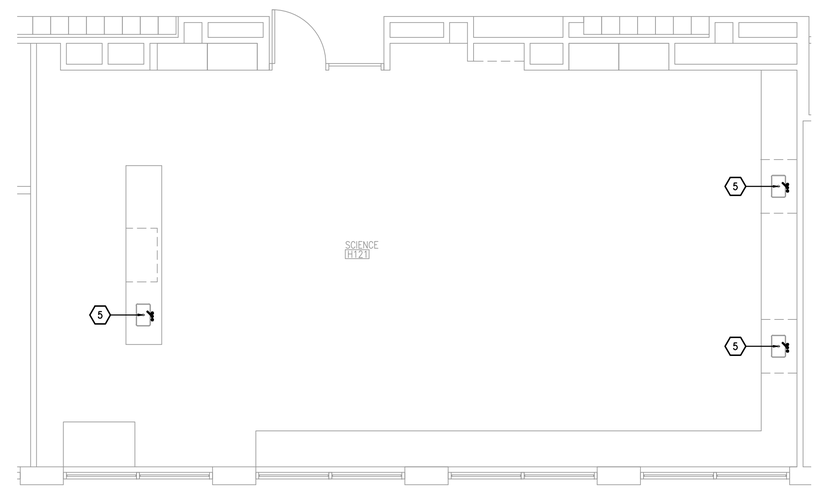

PLUMBING DEMOLITION PLAN - AREA 'G' (MIDDLE SCHOOL SCIENCE)
2 SCALE: 1/4" = 1'-0"

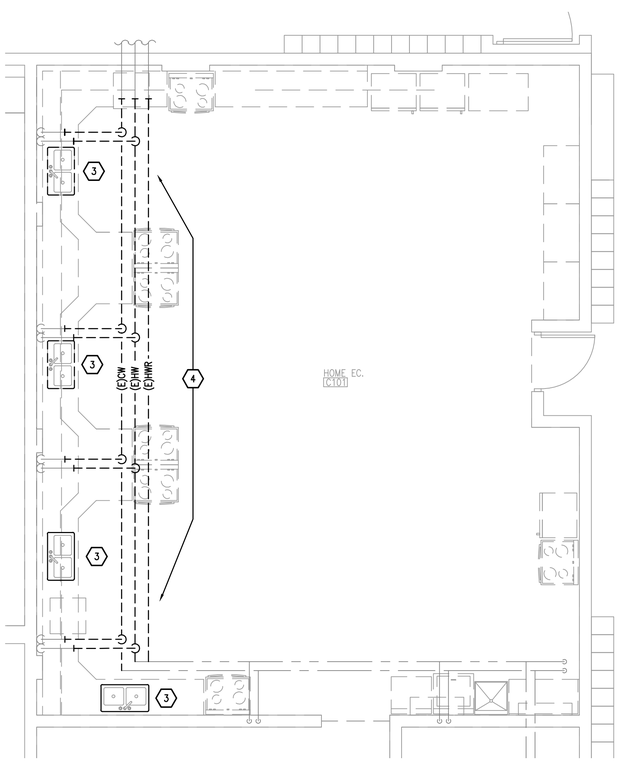

PLUMBING DEMOLITION PLAN - AREA 'D' (HOME EC)
4 SCALE: 1/4" = 1'-0"

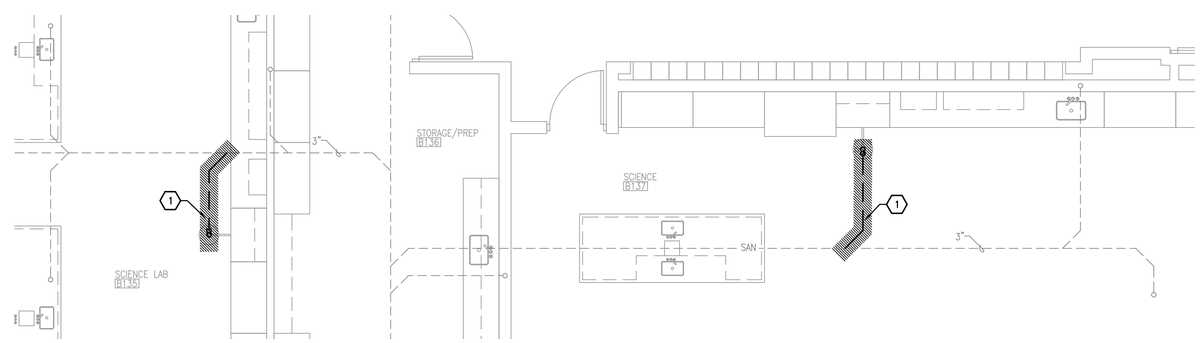

PLUMBING DEMOLITION PLAN - AREA 'B' (HIGH SCHOOL SCIENCE)
1 SCALE: 1/4" = 1'-0"

INTEGRATED DESIGNS INC.
ARCHITECTURE ENGINEERING CONSULTING
MARQUETTE OFFICE:
1021 W. BARAGA AVENUE
MARQUETTE, MI 49855
PHONE: (906)228-4449
FAX: (906)228-7524
BRIGHTON OFFICE:
5151 CLARKSTON RIVER AVE., SUITE 600
BRIGHTON, MI 48116
PHONE: (810)229-2701
FAX: (810)229-6787

HARBOR BEACH COMMUNITY SCHOOLS
PHASE 1 - 2026 ADDITION & RENOVATIONS
HARBOR BEACH, MICHIGAN
PROJECT NO. 24-138

	BY	NO.	REVISIONS	DATE
DESIGN	CRP	A	SCHEMATIC DESIGN	04.16.26
DRAWN	CRP	B	DESIGN DEVELOPMENT	06.03.26
CHECKED	SLB	C	95% OWNER REVIEW	08.03.26
APPROVED	SLB	D	FOR CONSTRUCTION	08.28.26

PLUMBING DEMOLITION PLANS

COPYRIGHT © 2026 INTEGRATED DESIGNS INC.

P1.0

KEY PLAN

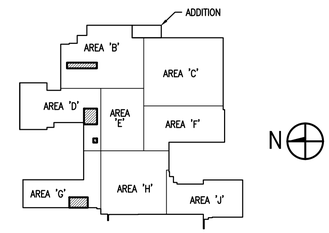

KEYNOTES

1. INSTALL NEW EMERGENCY FLOOR DRAIN FOR EMERGENCY SHOWERS. TRENCH FLOOR FOR NEW WASTE PIPING. EXPLORATORY DIGGING WILL BE REQUIRED TO FIND EXACT LOCATION OF EXISTING SANITARY LINES. COORDINATE CUTTING OF SLAB WITH GENERAL TRADES.
2. SINK AND COUNTER FURNISHED BY OTHERS. INSTALL NEW PLUMBING AND FAUCETS. RECONNECT TO EXISTING CW, HW, AND WASTE PIPE IN AREA. INSTALL WITH NEW SHUTOFF VALVES. INSTALL NEW PLASTER TRAP, BUFFALO TRAP-EZE 2-GAL., BENEATH SINK.
3. INSTALL NEW SINK IN NEW COUNTERTOP. CONNECT TO EXISTING CW, HW, AND WASTE PIPE IN AREA. EXTEND/REWORK PIPING WITHIN FURRED OUT CHASE BEHIND MILLWORK AS NEEDED. INSTALL WITH NEW SHUTOFF VALVES AND PROVIDE ASSE 1070 RATED MIXING VALVE.
4. COORDINATE RELOCATED PIPE RUNS WITH MECHANICAL EXHAUST HOOD INSTALLATION.
5. COORDINATE CONTINUATION WITH CIVIL.
6. INSTALL NEW FAUCET AND CONNECT TO EXISTING PIPING WITH NEW ASSE 1070 COMPLIANT MIXING VALVE.

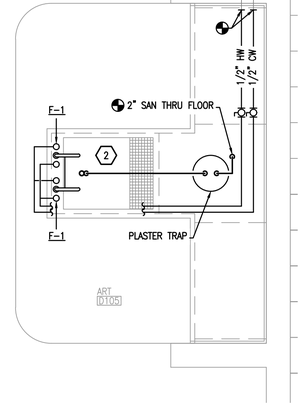

PLUMBING NEW WORK PLAN AREA 'D' (ART)
3 SCALE: 1/2" = 1'-0"

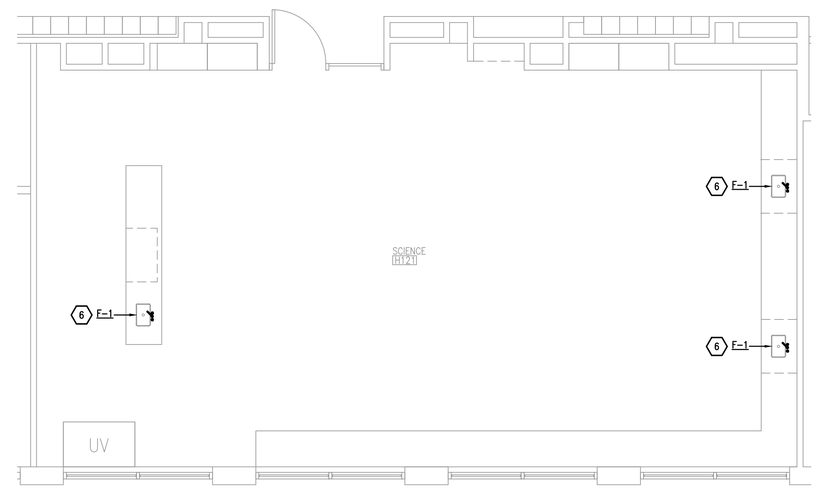

PLUMBING NEW WORK PLAN - AREA 'G' (MIDDLE SCHOOL SCIENCE)
2 SCALE: 1/4" = 1'-0"

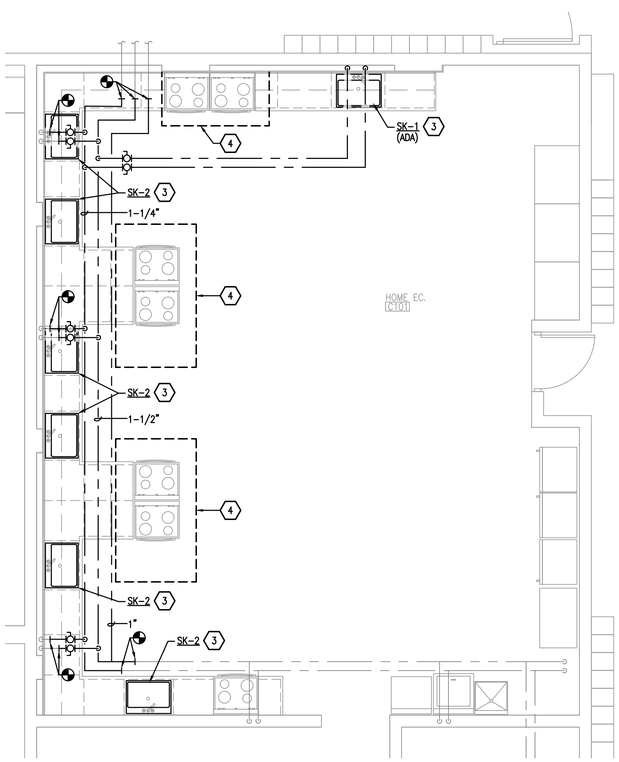

PLUMBING NEW WORK PLAN - AREA 'D' (HOME EC)
4 SCALE: 1/4" = 1'-0"

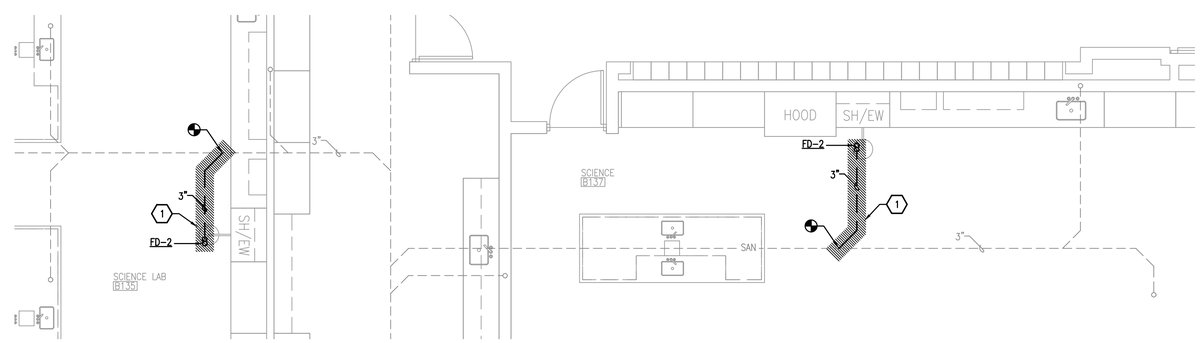

PLUMBING NEW WORK PLAN - AREA 'B' (HIGH SCHOOL SCIENCE)
1 SCALE: 1/4" = 1'-0"

INTEGRATED DESIGNS INC.
ARCHITECTURE ENGINEERING CONSULTING
MARQUETTE OFFICE:
1021 W. BARAGA AVENUE
MARQUETTE, MI 49855
PHONE: (906)228-4483
FAX: (906)228-7524
BIRGHTON OFFICE:
8101 GRAND RIVER AVE., SUITE 600
BRIGHTON, MI 48116
PHONE: (810)229-2701
FAX: (810)229-6787

HARBOR BEACH COMMUNITY SCHOOLS
PHASE 1 - 2026 ADDITION & RENOVATIONS
HARBOR BEACH, MICHIGAN
PROJECT NO. 24-138

	BY	NO.	REVISIONS	DATE
DESIGN	CRP	A	SCHEMATIC DESIGN	04.16.26
DRAWN	CRP	B	DESIGN DEVELOPMENT	06.03.26
CHECKED	SLB	C	95% OWNER REVIEW	08.03.26
APPROVED	SLB	D	FOR CONSTRUCTION	08.28.26

PLUMBING NEW WORK PLANS

COPYRIGHT © 2026 INTEGRATED DESIGNS INC.

P2.0

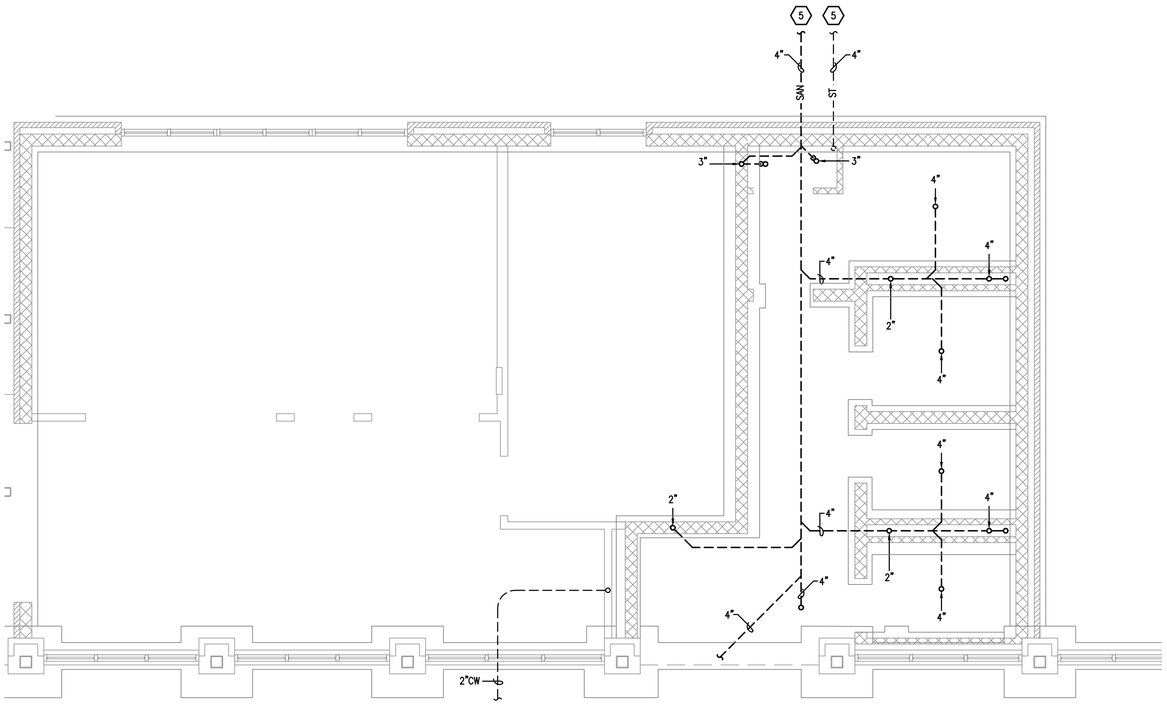

4 PLUMBING NEW WORK PLAN - ADDITION BELOW GROUND

SCALE: 1/4" = 1'-0"

KEY PLAN

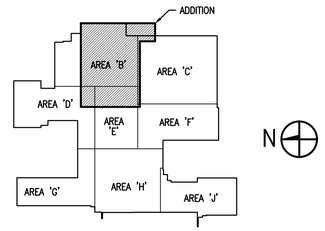

KEYNOTES

1. INSTALL NEW EMERGENCY FLOOR DRAIN FOR EMERGENCY SHOWERS. TRENCH FLOOR FOR NEW WASTE PIPING. EXPLORATORY DIGGING WILL BE REQUIRED TO FIND EXACT LOCATION OF EXISTING SANITARY LINES. COORDINATE CUTTING OF SLAB WITH GENERAL TRADES.
2. SINK AND COUNTER FURNISHED BY OTHERS. INSTALL NEW PLUMBING AND FAUCETS. RECONNECT TO EXISTING CW, HW, AND WASTE PIPE IN AREA. INSTALL WITH NEW SHUTOFF VALVES. INSTALL NEW PLASTER TRAP BENEATH SINK.
3. INSTALL NEW SINK IN NEW COUNTERTOP. CONNECT TO EXISTING CW, HW, AND WASTE PIPE IN AREA. EXTEND/REWORK PIPING WITHIN FURRED OUT CHASE BEHIND MILLWORK AS NEEDED. INSTALL WITH NEW SHUTOFF VALVES AND PROVIDE ASSE 1070 RATED MIXING VALVE.
4. COORDINATE RELOCATED PIPE RUNS WITH MECHANICAL EXHAUST HOOD INSTALLATION.
5. COORDINATE CONTINUATION WITH CIVIL.
6. INSTALL 2" CW INTO CHASE AND DOWN THROUGH FLOOR TO SERVE ADDITION.

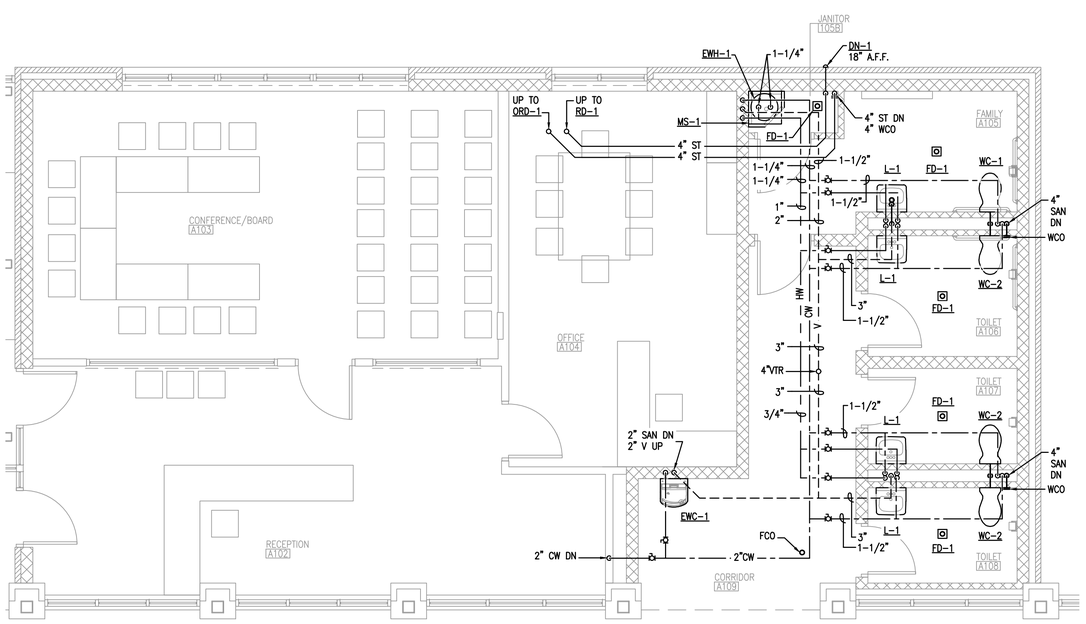

3 PLUMBING NEW WORK PLAN - ADDITION ABOVE GROUND

SCALE: 1/4" = 1'-0"

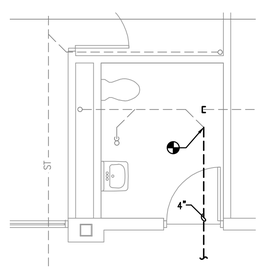

2 PLUMBING NEW WORK PLAN AREA 'B' (OFFICE RESTROOM)

SCALE: 1/4" = 1'-0"

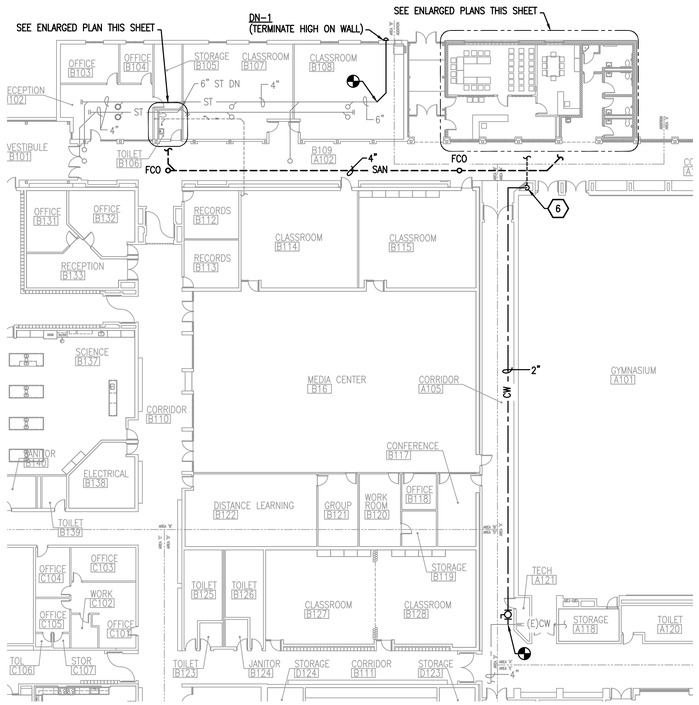

1 PLUMBING NEW WORK - COMPOSITE PLAN

SCALE: 3/64" = 1'-0"

MARQUETTE OFFICE:
1021 W. BARAGA AVENUE
MARQUETTE, MI 49855
PHONE: (906)228-4480
FAX: (906)228-7524

BIRGHTON OFFICE:
5577 CLARKSTON RIVER AVE., SUITE 600
BIRGHTON, MI 48116
PHONE: (810)229-2701
FAX: (810)229-4787

INTEGRATED DESIGNS INC.
ARCHITECTURE
ENGINEERING
CONSULTING

HARBOR BEACH COMMUNITY SCHOOLS
PHASE 1 - 2026 ADDITION & RENOVATIONS
HARBOR BEACH, MICHIGAN
PROJECT NO. 24-138

NO.	REVISIONS	DATE
A	SCHEMATIC DESIGN	04.16.26
B	DESIGN DEVELOPMENT	06.03.26
C	95% OWNER REVIEW	08.03.26
0	FOR CONSTRUCTION	08.28.26

	BY
DESIGN	CRP
DRAWN	CRP
CHECKED	SLB
APPROVED	SLB

PLUMBING
NEW WORK
PLANS

COPYRIGHT © 2026 INTEGRATED DESIGNS INC.

P2.1

PLUMBING FIXTURE SCHEDULE

SYM	DESCRIPTION	WASTE	VENT	CW	HW
DN-1	DOWNSPOUT NOZZLE – JAY R. SMITH #1770, COWN TONGUE, CAST BRONZE BODY AND FLANGE, NO-HUB OUTLET	4"	–	–	–
F-1	FAUCET – WATER SAVER #L414VB-BH, LABORATORY MIXING FAUCET, DECK MOUNTED, 6" GOOSENECK WITH VACUUM BREAKER, WRIST BLADE HANDLES. WITH SEVEN SERRATION HOSE END. INSTALL WITH ASSE 1070 COMPLIANT MIXING VALVE ON HOT WATER.				
FD-1	FLOOR DRAIN – JAY R. SMITH #2005, CAST IRON BODY WITH FLASHING COLLAR AND ADJUSTABLE STRAINER HEAD, ADA GRATE, BOTTOM NO HUB OUTLET. PROVIDE WITH SURESEAL OR EQUIVALENT WATERLESS INLINE TRAP SEAL.	SEE PLANS	–	–	–
FD-2	FLOOR DRAIN – IPEX FLOWAY #F1201, POLYPROPYLENE ADJUSTABLE FLOOR DRAIN WITH 6"Ø STRAINER AND PLAIN END OUTLET. 14-1/2"Ø FLANGE, AND NON-PUNCTURING STYLE FLASHING COLLAR WITH WEEP HOLES. PROVIDE WITH SURESEAL OR EQUIVALENT WATERLESS INLINE TRAP SEAL.	SEE PLANS	–	–	–
L-1	LAVATORY – SLOAN #SS-3006, WALL-MOUNTED VITREOUS CHINA WITH LEDGEBACK, REAR OVERFLOW, 3-HOLE WITH 4" CENTERSET, ADA COMPLIANT. FAUCET – SLOAN #SF-2350, BATTERY-POWERED, DECK-MOUNTED, MID INTEGRATED BASE BODY, 3-HOLE WITH 4" CENTERSET. ASSE 1070 COMPLIANT MIXING VALVE.	1 1/2"	1 1/2"	1/2"	1/2"
MS-1	MOP SINK – FIAT #TSBC6010, TERAZZO WITH STAINLESS STEEL CURB CAPS. 24"x24"x12." FAUCET – FIAT #830AA, CHROME PLATED FAUCET WITH VACUUM BREAKER, INTEGRAL STOPS, ADJUSTABLE WALL BRACE, PAIL HOOK, ¾" HOSE THREAD ON SPOUT. 8" CENTERSET.	3"	1 1/2"	1/2"	1/2"
ORD-1	OVERFLOW ROOF DRAIN – JAY R. SMITH #1045, CAST IRON BODY WITH ADJUSTABLE EXTENSION SLEEVE, REVERSIBLE COLLAR, COMBINED FLASHING CLAMP AND 2" WATER DAM WITH POLYETHYLENE DOME.	–	–	–	–
PWC-1	PRESSURE WATER COOLER – OWNER FURNISHED. CONTRACTOR INSTALLED.	1-1/2"	–	1/2"	–
RD-1	ROOF DRAIN – JAY R. SMITH #1015, CAST IRON BODY WITH ADJUSTABLE EXTENSION SLEEVE, REVERSIBLE COLLAR, COMBINED FLASHING CLAMP AND GRAVEL STOP WITH POLYETHYLENE DOME.	–	–	–	–
SK-1	SINGLE-BOWL SINK – ELKAY "LRAD312260" DROP-IN, STAINLESS STEEL, OVERALL DIMS: 31"x22"x6", BOWL DIM: 28"x16"x6". 3-HOLES ON 4" CENTERS. ADA COMPLIANT. FAUCET – CHICAGO "786-GN8AFCABCP" DECK-MOUNTED RIGID/SWING GOOSENECK SPOUT WITH 1.5 GPM FLOW CONTROL, VANDAL PROOF 4" WRISTBLADE HANDLES, REBUILDABLE COMPRESSION CARTRIDGE. PROVIDE WITH ASSE 1070 COMPLIANT MIXING VALVE.	1 1/2"	1 1/2"	1/2"	1/2"
SK-2	SINK-BOWL SINK – ELKAY "DLR312210" DROP-IN, STAINLESS STEEL, OVERALL DIMS: 31"x22"x10-1/8", BOWL DIM: 28"x16"x10-1/8". 3-HOLES ON 4" CENTERS. FAUCET – CHICAGO "786-GN8AFCABCP" DECK-MOUNTED RIGID/SWING GOOSENECK SPOUT WITH 1.5 GPM FLOW CONTROL, VANDAL PROOF 4" WRISTBLADE HANDLES, REBUILDABLE COMPRESSION CARTRIDGE. PROVIDE WITH ASSE 1070 COMPLIANT MIXING VALVE.	1 1/2"	1 1/2"	1/2"	1/2"
TS-1	TRAP SEAL – SURESEAL. IN-LINE FLOOR DRAIN TRAP SEAL, PREASSEMBLED, ABS PLASTIC HOUSING, NEOPRENE RUBBER DIAPHRAGM WITH 2" SOFT RUBBER GASKETS, ASSE 1072.				
UR-1	URINAL – SLOAN #SU-1009, WALL-MOUNTED, VITREOUS CHINA, WASHDOWN, INTEGRAL FLUSHING RIM, ADA COMPLIANT. FLUSH VALVE – SLOAN #G2 8186, EXPOSED SENSOR OPERATED, 1.0 GPF, SEMI-RED BRASS COMPONENTS	2"	1 1/2"	–	3/4"
WC-1	WATER CLOSET – SLOAN #ST-2459, WALL-MOUNTED, ELONGATED, VITREOUS CHINA, SIPHON JET FLUSHING, ADA COMPLIANT (RIM HEIGHT 17"). FLUSH VALVE – SLOAN #G2 8111, EXPOSED SENSOR OPERATED, 1.6 GPF, SEMI-RED BRASS COMPONENTS	4"	2"	1"	–
WC-2	WATER CLOSET – SLOAN #ST-2459, WALL-MOUNTED, ELONGATED, VITREOUS CHINA, SIPHON JET FLUSHING, STANDARD HEIGHT (RIM HEIGHT 15"). FLUSH VALVE – SLOAN #G2 8111, EXPOSED SENSOR OPERATED, 1.6 GPF, SEMI-RED BRASS COMPONENTS	4"	2"	1"	–

ELECTRIC, DOMESTIC-WATER HEATER SCHEDULE

SYM	RATED NOM. CAPACITY (GAL.)	FLOW (GPM)	RECOVERY @ 80°F GPH TEMP RISE (GPH)	WATER CONN. (IN)	HEIGHT (IN)	DIA. (IN)	ELECTRICAL			DISCONNECT			MANUFACTURER AND MODEL
							INPUT (KW)	VOLTS	PHASE	FURN. BY	INST. BY	TYPE	
EWH-1	19	–	18	3/4	24.5	18	3.5	208	3	ELEC.	ELEC.	FUSED SWITCH	BRADFORD WHITE RE120L6

NOTES:
1.1. XXXXXX

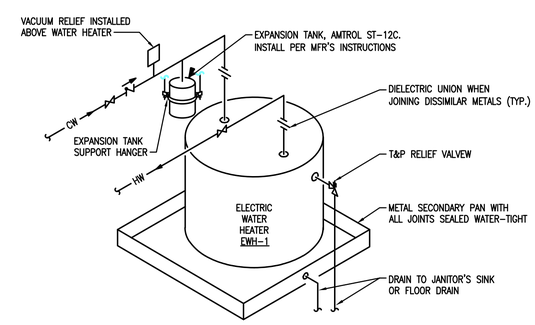

NOTE:

PLUMBING CONTRACTOR SHALL FABRICATE SHELF AND WALL SUPPORT BRACKETS TO SUPPORT MIN. 350 LBS FOR WATER HEATER.

WATER HEATER PIPING DIAGRAM

N.T.S.

MARQUETTE OFFICE:
1021 W. BARAGA AVENUE
MARQUETTE, MI 49855
PHONE: (906)228-4480
FAX: (906)228-7524

BIRGHTON OFFICE:
8101 GRAND RIVER AVE., SUITE 600
BRIGHTON, MI 48116
PHONE: (810)229-2701
FAX: (810)229-6787

INTEGRATED DESIGNS INC.
ARCHITECTURE ENGINEERING CONSULTING

HARBOR BEACH COMMUNITY SCHOOLS
PHASE 1 - 2026 ADDITION & RENOVATIONS
HARBOR BEACH, MICHIGAN
PROJECT NO. 24-138

	BY	NO.	REVISIONS	DATE
DESIGN	CRP	A	SCHEMATIC DESIGN	04.16.26
DRAWN	CRP	B	DESIGN DEVELOPMENT	06.03.26
CHECKED	SLB	C	95% OWNER REVIEW	08.03.26
APPROVED	SLB	0	FOR CONSTRUCTION	08.28.26

PLUMBING DETAILS & SCHEDULES

COPYRIGHT © 2026 INTEGRATED DESIGNS INC.

P3.0

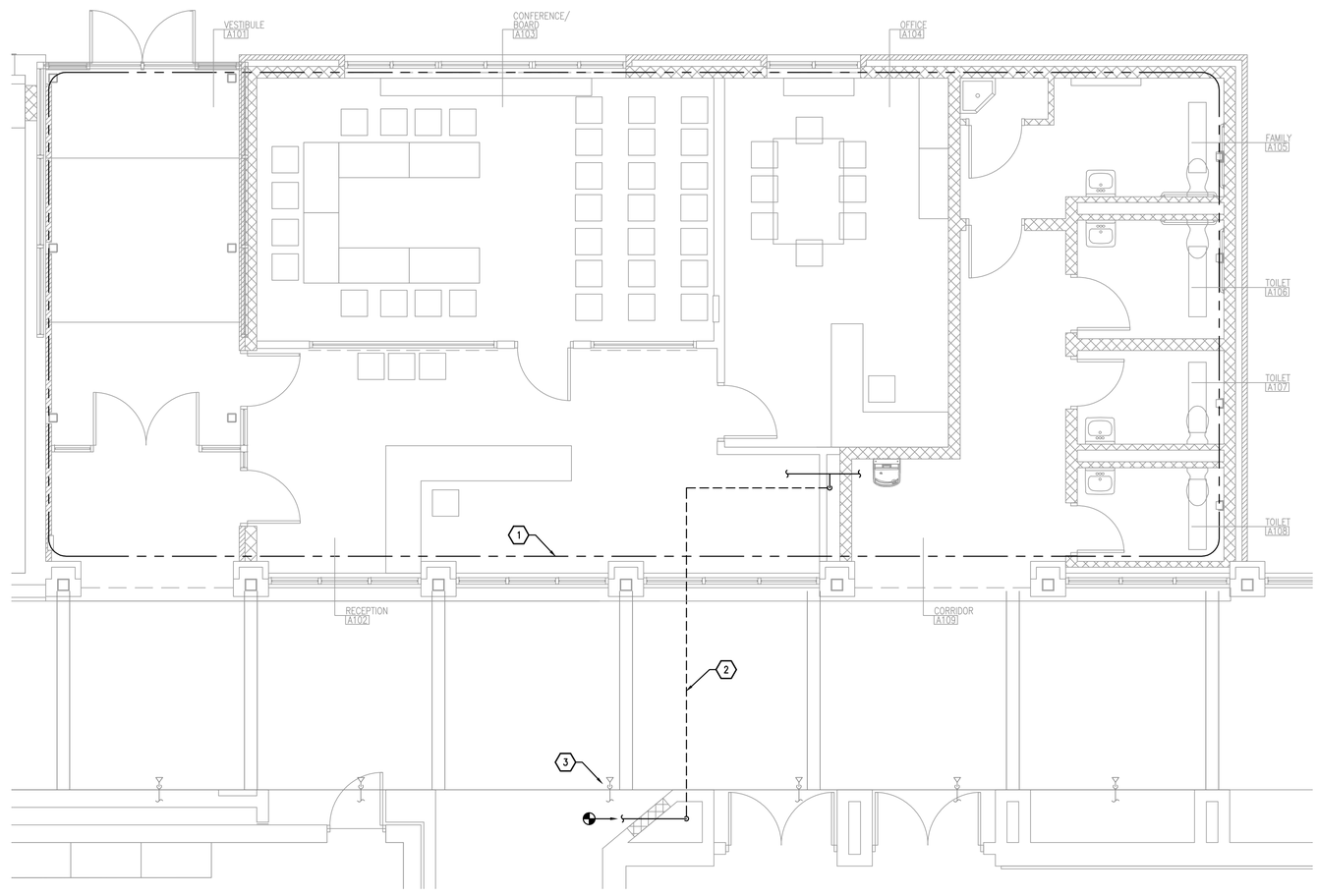

1 FIRE PROTECTION NEW WORK PLAN - OFFICE ADDITION
SCALE: 1/4" = 1'-0"

KEYNOTES

1. INSTALL NEW NFPA 13 COMPLIANT WET PIPE SPRINKLER SYSTEM IN THIS AREA.
2. INSTALL SPRINKLER PIPE DOWN IN EXISTING CHASE AND BELOW FLOOR TO SERVE THE ADDITION.
3. MODIFY EXISTING SPRINKLER HEAD FOR NEW GYPSUM BOARD WALL ACCENT. COORDINATE WITH ARCHITECTURAL PLANS AND DETAILS.

GENERAL NOTES

1. THESE DRAWINGS ARE DIAGRAMMATIC AND INDICATE THE GENERAL EXTENT OF THE WORK. PROVIDE FIRE PROTECTION SYSTEMS COMPLETE PER NFPA, SPECIFICATION, PER APPLICABLE CODES, AND AUTHORITIES HAVING JURISDICTION.
2. CONTRACTOR SHALL COORDINATE THEIR WORK WITH THE WORK OF ALL OTHER TRADES.
3. SPRINKLER PIPING SHALL NOT BE LOCATED BELOW MECHANICAL EQUIPMENT.
4. MINIMUM RUN-OUT PIPE SIZE TO SPRINKLER HEADS SHALL BE 1".
5. CONTRACTOR SHALL MAKE PRESSURE AND FLOW TEST PRIOR TO SYSTEM DESIGN. REFER TO SPECIFICATIONS FOR REQUIREMENTS.
6. CONTRACTOR SHALL MAKE APPLICATION AND PAY FOR ALL INSPECTION, PERMIT, AND LICENSE REQUIRED BY THE LOCAL AUTHORITY.
7. PROVIDE AN AUTOMATIC WET PIPE FIRE PROTECTION SYSTEM IN ACCORDANCE WITH NFPA 13 LIGHT HAZARD CLASSIFICATION FOR ALL AREAS, EXCEPT:

   7.1. STORAGE ROOMS
   7.2. MECHANICAL ROOMS
   7.3. JANITOR CLOSETS

8. PROVIDE AN AUTOMATIC WET PIPE FIRE PROTECTION SYSTEM IN ACCORADANCE WITH NFPA 13 ORDINARY HAZARD CLASSIFICATION FOR:

   8.1. STORAGE ROOMS
   8.2. MECHANICAL ROOMS
   8.3. JANITOR CLOSETS

9. CENTER SPRINKLER HEADS IN CEILING TILES WHERE APPLICABLE.
10. PLASTIC FIRE SPRINKLER PIPIING EXPOSED WITHIN A PLENUM SHALL BE USED ONLY IN WET PIPE SYSTEMS AND SHALL BE LISTED AND LABELED AS HAVING A PEAK OPTICAL DENSITY NOT GREATER THAN 0.50, AN AVERAGE OPTICAL DENSITY NOT GREATER THAN 0.15, AND A FLAME SPREAD DISTANCE NOT GREATER THAN 5 FEET WHEN TESTED IN ACCORDANCE WITH UL 1887.

KEY PLAN

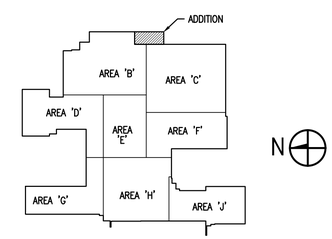

INTEGRATED DESIGNS INC.
ARCHITECTURE
ENGINEERING
CONSULTING

MARQUETTE OFFICE:
1021 W. BARAGA AVENUE
MARQUETTE, MI 49855
PHONE: (906)228-4400
FAX: (906)228-7524

BIRGHTON OFFICE:
5151 CLARKSTON RIDGE AVE., SUITE 600
BIRGHTON, MI 48116
PHONE: (810)229-2701
FAX: (810)229-4787

HARBOR BEACH COMMUNITY SCHOOLS
PHASE 1 - 2026 ADDITION & RENOVATIONS
HARBOR BEACH, MICHIGAN
PROJECT NO. 24-138

NO.	REVISIONS	DATE
A	SCHEMATIC DESIGN	04.16.26
C	95% OWNER REVIEW	08.03.26
0	FOR CONSTRUCTION	08.28.26

	BY
DESIGN	CRP
DRAWN	CRP
CHECKED	SLB
APPROVED	SLB

FIRE PROTECTION
COMPOSITE PLAN
NEW WORK

COPYRIGHT © 2026 INTEGRATED DESIGNS INC.

FP2.0

KEYED NOTES - DEMOLITION

1. ELECTRICAL CONTRACTOR SHALL DISCONNECT AND REMOVE EXISTING SWITCHBOARD. THE DESIGN INTENT IS TO REPLACE ONE FOR ONE WITH NEW IN THE SAME LOCATION.
2. ELECTRICAL CONTRACTOR SHALL DISCONNECT AND REMOVE THE EXISTING FIRE ALARM CONTROL PANEL. THE DESIGN INTENT IS TO INSTALL A NEW FIRE ALARM SYSTEM THROUGHOUT THE SCHOOL WITH A NEW FRONT END AND NEW DEVICES. REFER TO SHEET E0.2 FOR NEW FIRE ALARM CONTROL PANEL LOCATION. ELECTRICAL CONTRACTOR SHALL PROVIDE CUSTOM COVERPLATES TO COVER ALL AREAS WHERE FIRE ALARM ROUGH-INS ARE NOT TO BE REUSED. THE EXISTING FIRE ALARM CONTROL PANEL LOCATION SHALL BE UTILIZED FOR THE NEW REMOTE ANNUNICIATOR PANEL. PROVIDE CUSTOM STEEL PLATE TO COVER THE EXISTING FACP OPENING. PAINT ALL COVERPLATES TO MATCH THE WALL.

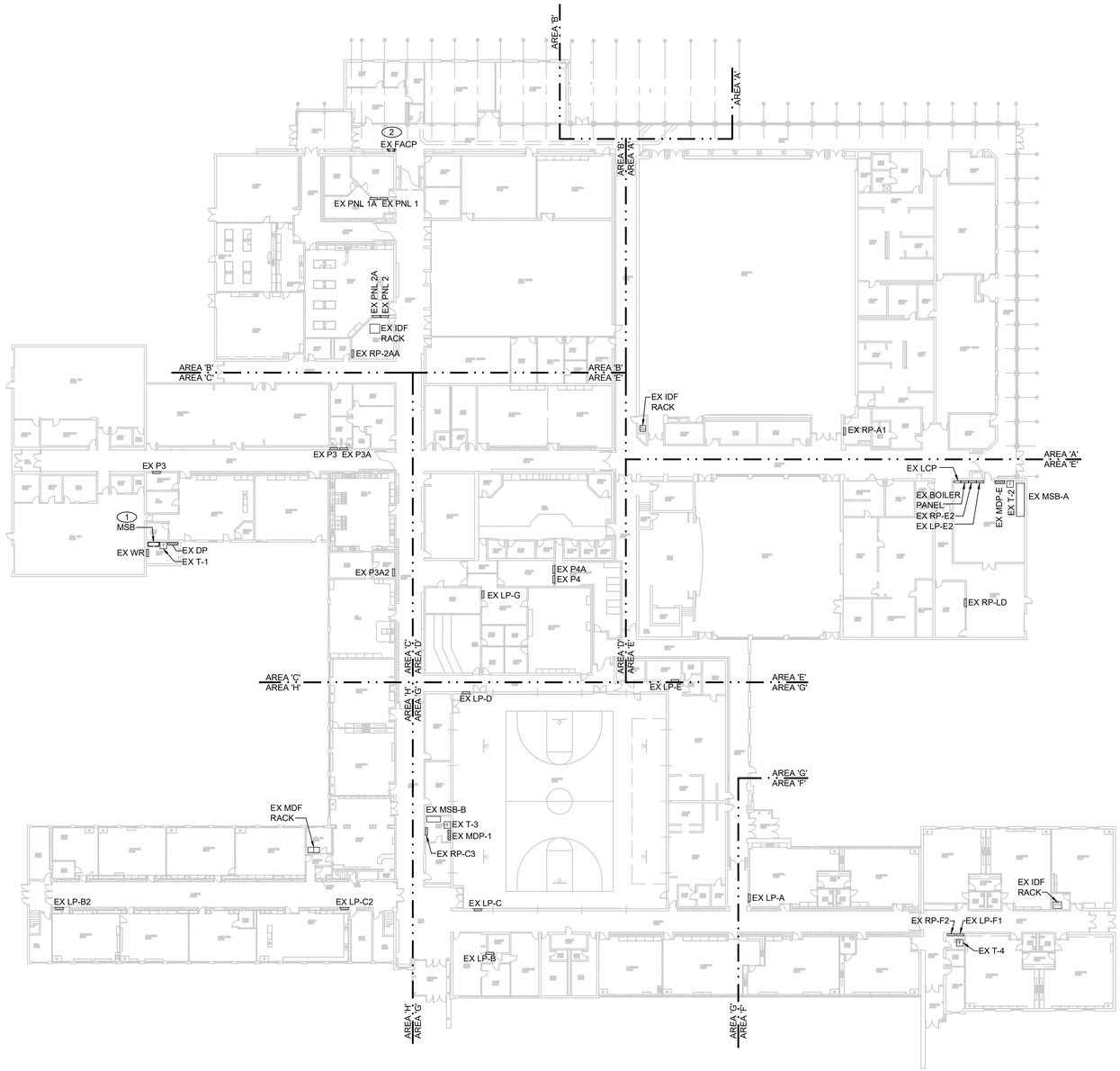

OVERALL FIRST FLOOR PLAN - ELECTRICAL DEMOLITION
1"=30'-0"

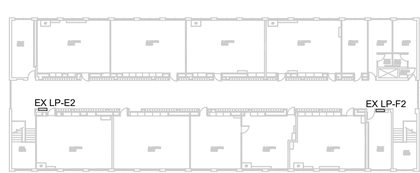

OVERALL SECOND FLOOR PLAN - ELECTRICAL DEMOLITION
1"=30'-0"

KEY PLAN

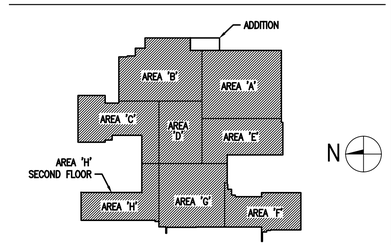

MACMILLAN ASSOCIATES
CONSULTING ENGINEERS
714 EAST MIDLAND STREET • BAY CITY, MICHIGAN 48706
(989) 894-4300 F (989) 894-9930 WWW.MACMILLANASSOCIATES.COM

STATE OF MICHIGAN
August 28, 2026
MAI #2026-01014

INTEGRATED DESIGNS INC.
ARCHITECTURE ENGINEERING CONSULTING
MARQUETTE OFFICE:
1021 W. BARAGA AVENUE
MARQUETTE, MI 49855
PHONE: (906)228-4660
FAX: (906)228-7524
BRIGHTON OFFICE:
8011 W. GRAND RIVER AVE., SUITE 600
BRIGHTON, MI 48116
PHONE: (810)229-2701
FAX: (810)229-4787

HARBOR BEACH PUBLIC SCHOOLS
PHASE 1 - 2026 ADDITION & RENOVATIONS
HARBOR BEACH, MICHIGAN
PROJECT NO. 24-128

NO	REVISIONS	DATE
0	FOR CONSTRUCTION	08/28/26

	BY	DATE
DESIGN	BS	08/28/26
DRAWN	RLM	08/28/26
CHECKED	BS	08/28/26
APPROVED	JWF	08/28/26

OVERALL PLAN - ELECTRICAL DEMOLITION

COPYRIGHT © 2025 INTEGRATED DESIGNS INC.

E0.1

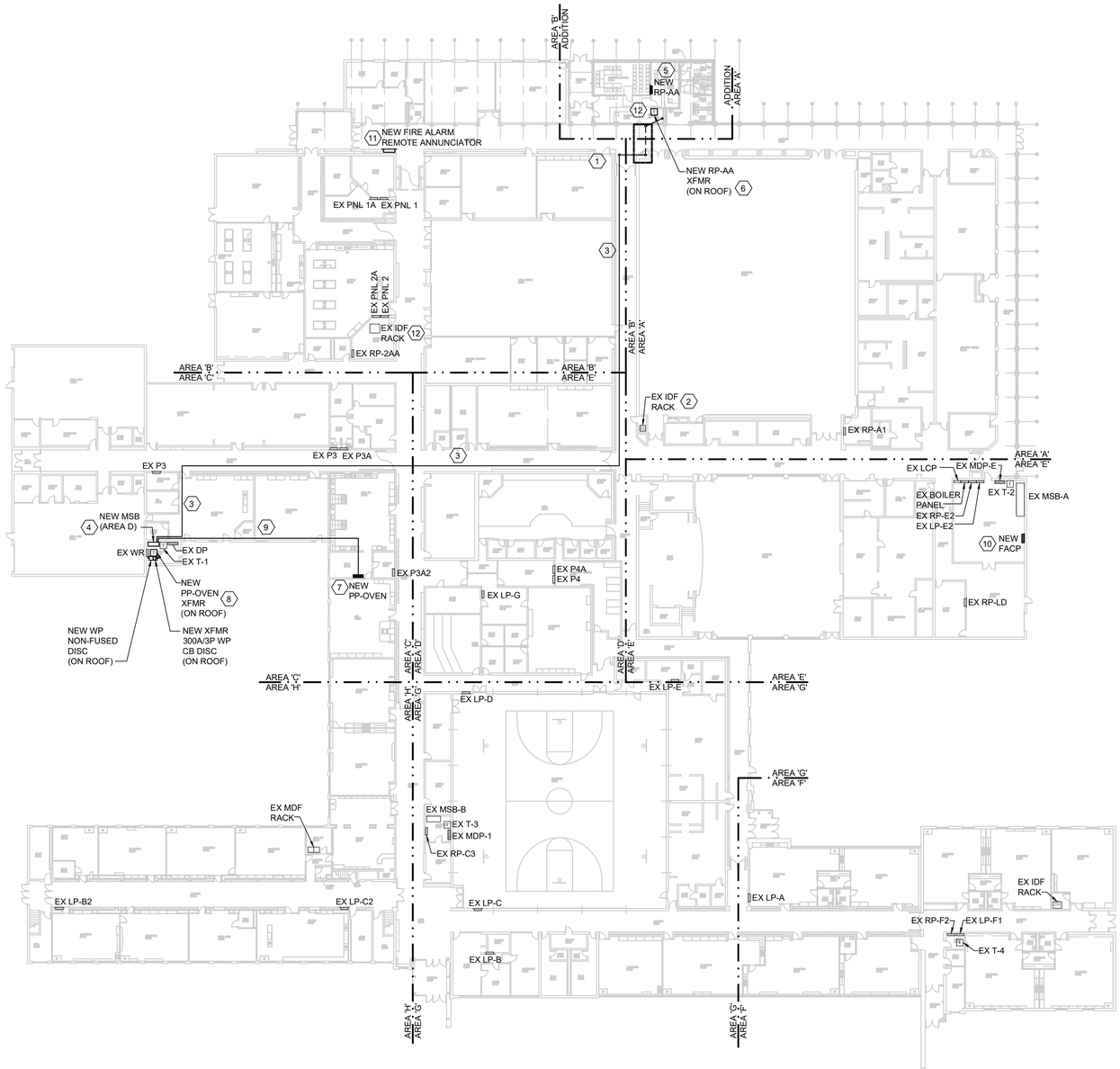

OVERALL FIRST FLOOR PLAN - ELECTRICAL REVISIONS

1"=30'-0"

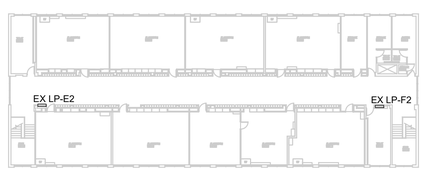

OVERALL SECOND FLOOR PLAN - ELECTRICAL REVISIONS

1"=30'-0"

KEYED NOTES

1. ELECTRICAL CONTRACTOR SHALL FURNISH AND INSTALL THE FOLLOWING CONDUITS FROM THE EXISTING BUILDING CORRIDOR, INTO THE TRAINGULAR CHASE, DOWN INTO THE UNDERGROUND TRENCH, AND UP INTO THE NEW BUILDING ADDITION CHASE WALL. THE DESIGN INTENT IS FOR ALL CONDUITS TO BE INSTALLED IN THE UNDERGROUND TRENCH GOING ACROSS THE CORRIDOR. ROUTING SHALL FOLLOW MECHANICAL PIPING.

   CONDUITS TO BE INSTALLED:

   (1) 2-1/2" CONDUIT FOR NEW RP-AA FEED
   (1) 2" CONDUIT FOR DATA FEEDS
   (1) 1" CONDUIT FOR NEW PUBLIC ADDRESS
   (1) 1" CONDUIT FOR NEW FIRE ALARM
   (2) 2" CONDUIT FOR FUTURE USE

2. EXISTING DATA RACK FOR NEW BUILDING ADDITION DATA FEEDS. ROUTING SHALL FOLLOW EXISTING CORRIDOR. REFER TO KEYED NOTE 1 FOR INSTALLATION INSTRUCTIONS ACROSS CORRIDOR.

3. NEW RP-AA FEED. ROUTING IS SHOWN DIAGRAMMATICALLY. ELECTRICAL CONTRACTOR SHALL FURNISH AND INSTALL CONDUIT AND FEED FROM ELECTRICAL ROOM C129, THROUGH CLASSROOM AND INTO THE CORRIDOR. FROM THE CORRIDOR C130 CEILING SPACE, CONTINUE FEED DOWN THE CORRIDOR C130 AND TRANSITION TO CORRIDOR A105. FOLLOW CORRIDOR A105 UNTIL THE END OF THE CORRIDOR. REFER TO KEYED NOTE 1 FOR INSTALLATION INSTRUCTIONS ACROSS CORRIDOR. FURNISH AND INSTALL PULL BOXES AS REQUIRED.

4. ELECTRICAL CONTRACTOR SHALL FURNISH AND INSTALL NEW SQUARE D QED2 SWITCHBOARD OR EQUAL IN THE EXISTING LOCATION OF MSB (AREA D). THE DESIGN INTENT IS TO REPLACE THE EXISTING SWITCHGEAR ONE FOR ONE IN THE SAME LOCATION. FURNISH AND INSTALL ALL REQUIRED GUTTERS AND JUNCTION BOXES TO CONNECT TO THE EXISTING CONDUCTORS. SPLICE AND EXTEND ALL EXISTING CONDUCTORS AS REQUIRED.

5. ELECTRICAL CONTRACTOR SHALL FURNISH AND INSTALL NEW PANELBOARD RP-AA IN NEW ADDITION.

6. ELECTRICAL CONTRACTOR SHALL FURNISH AND INSTALL NEW TRANSFORMER FOR RP-AA ON THE ROOF. FURNISH AND INSTALL LINE SIDE 100A/3P CB DISCONNECT ON A UNISTRUT RACK IN AN ACCESSIBLE LOCATION ON THE ROOF. UTILIZE THE STRUCTURAL CURB TO MOUNT THE DISCONNECT NEXT TO THE TRANSFORMER. REFER TO UNISTRUT RACK DETAIL FOR INSTALLATION INSTRUCTIONS. ALL DEVICES SHALL BE NEMA 3R RATED.

7. ELECTRICAL CONTRACTOR SHALL FURNISH AND INSTALL NEW PANELBOARD PP-OVEN IN HOME EC ROOM. ELECTRICAL CONTRACTOR SHALL FURNISH AND INSTALL NEW FEED WITH ROUTING DENOTED ON E0.2.

8. ELECTRICAL CONTRACTOR SHALL FURNISH AND INSTALL NEW TRANSFORMER FOR PP-OVEN ON THE EXISTING ELECTRICAL ROOM ROOF.

9. NEW PP-OVEN FEED. ROUTING SHOWN DIAGRAMMATICALLY. ELECTRICAL CONTRACTOR SHALL FURNISH AND INSTALL CONDUIT AND FEED FROM THE ELECTRICAL ROOM C129, INTO CLASSROOM C131, ACROSS CLASSROOM C133, AND INTO THE HOME EC ROOM. SURFACE MOUNT CONDUIT AND FEED FROM HOME EC ROOM CEILING SPACE DOWN THE WALL TO THE NEW PP-OVEN PANELBOARD. FURNISH AND INSTALL LINE SIDE 150A/3P NEMA 3R RATED CB DISCONNECT ON A UNISTRUT RACK IN AN ACCESSIBLE LOCATION ON THE ROOF. UTILIZE THE STRUCTURAL CURB TO MOUNT THE DISCONNECT NEXT TO THE TRANSFORMER. REFER TO UNISTRUT RACK DETAIL FOR INSTALLATION INSTRUCTIONS.

10. FURNISH AND INSTALL FIRE ALARM CONTROL PANEL. LOCATE IN AN ACCESSIBLE LOCATION IN THE EXISTING BOILER ROOM. COORDINATE WITH OWNER FOR THE REMOVAL OF ANY EXISTING TOOL BOARDS FOR NEW FIRE ALARM CONTROL PANEL LOCATION.

11. FURNISH AND INSTALL FIRE ALARM REMOTE ANNUNCIATOR. THE DESIGN INTENT IS TO UTILIZE THE EXISTING FIRE ALARM CONTROL PANEL LOCATION FOR THE NEW REMOTE ANNUNCIATOR LOCATION. COORDINATE ALL ASSOCIATED BLOCK WORK WITH ARCHITECT PRIOR TO INSTALLATION.

12. ELECTRICAL CONTRACTOR SHALL EXTEND EXISTING RAULAND NETWORK BASED PA SYSTEM INTO THE NEW OFFICE ADDITION. PROVIDE SPEAKERS AND COMMUNICATION HANDSETS FOR THE MAIN RECEPTION DESK AND PRINCIPALS OFFICE.

GENERAL NOTES

1. ELECTRICAL TO REPLACE ALL DAMAGED CEILING TILES IN REGARDS TO ELECTRICAL FEED ROUTING. ELECTRICAL CONTRACTOR IS RESPONSIBLE FOR REMOVAL AND REINSTALLATION OF TILES

STATE OF MICHIGAN
BRIAN SCHMIDT
August 28, 2026
MAI #2026-01014

KEY PLAN

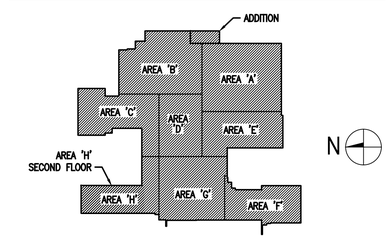

MACMILLAN ASSOCIATES
CONSULTING ENGINEERS
714 EAST MIDLAND STREET • BAY CITY, MICHIGAN 48706
(989) 894-4300 F (989) 894-9930 WWW.MACMILLANASSOCIATES.COM

MARQUETTE OFFICE:
1021 W. BARGA AVENUE
MARQUETTE, MI 49855
PHONE: (906)228-4660
FAX: (906)228-7524
BRIGHTON OFFICE:
8011 W. GRAND RIVER AVE., SUITE 600
BRIGHTON, MI 48116
PHONE: (810)229-2701
FAX: (810)229-4787

ARCHITECTURE
ENGINEERING
CONSULTING

INTEGRATED DESIGNS INC.

HARBOR BEACH PUBLIC SCHOOLS
PHASE 1 - 2026 ADDITION & RENOVATIONS
HARBOR BEACH, MICHIGAN
PROJECT NO. 24-128

NO.	REVISIONS	DATE
0	FOR CONSTRUCTION	08/28/26

	BY	DATE
DESIGN	BS	08/28/26
DRAWN	RLM	08/28/26
CHECKED	BS	08/28/26
APPROVED	JWF	08/28/26

OVERALL PLAN - ELECTRICAL REVISIONS

COPYRIGHT © 2025 INTEGRATED DESIGNS INC.

E0.2

FLOOR PLAN AREA 'A' - ELECTRICAL DEMOLITION
1/8"=1'-0"

GENERAL NOTES - DEMOLITION

1. ELECTRICAL CONTRACTOR SHALL REMOVE AND PROPERLY DISPOSE OF ALL FIXTURES, LAMPS, BALLASTS AND WIRING SHOWN FOR DEMOLITION.
2. ELECTRICAL CONTRACTOR SHALL REMOVE ALL BLANK COVERS ON BOXES TO CONFIRM THE TYPE OF WIRING, POWER OR LOW VOLTAGE. REMOVE ALL WIRING, BOXES IF EMPTY SHALL BE REMOVED FOR WALL PATCHING.
3. ALL ITEMS SHOWN DASHED SHALL BE REMOVED UNLESS OTHERWISE NOTED.
4. REMOVE ALL CONDUIT AND WIRING BACK TO SOURCE FOR ALL DEVICES SHOWN TO BE REMOVED UNLESS OTHERWISE NOTED.
5. REMOVE ALL FIRE ALARM DEVICES. AS NOTED BACK TO EXISTING MAIN FIRE ALARM CONTROL PANEL.THE DESIGN INTENT IS TO INSTALL A NEW FIRE ALARM SYSTEM IN THE SAME LOCATIONS UTILIZING EXISTING ROUGH-INS. NEW LOCATIONS WILL BE ADDED TO PROVIDE PROPER COVERAGE. REFER TO NEW FIRE ALARM DRAWINGS.
6. REMOVE ALL HANGERS, SUPPORTS AND STRAPS ASSOCIATED WITH ITEMS BEING REMOVED.
7. DEVICE LOCATIONS ARE SHOWN DIAGRAMMATICALLY. FIELD CONFIRM EXACT LOCATION.
8. FOR ALL DEMOLITION ITEMS NOT SHOWN, CONTRACTORS SHALL FIELD VERIFY THE EXTENT AND QUANTITY OF DEMOLITION AND ALSO FULLY COORDINATE WITH THE ARCHITECTURAL AND MECHANICAL DRAWINGS.
9. ELECTRICAL CONTRACTOR SHALL PROVIDE BLANK COVERS FOR ALL ROUGH IN LOCATIONS NOT IN USE.
10. FOR ALL DEVICES SHOWN AS DEMO AND THE LOCATION IS NOT REUSED, PROVIDE BLANK COVER UNLESS SPECIFICALLY NOTED BY ARCHITECT.

KEYED NOTES - DEMOLITION

1. DISCONNECT AND REMOVE THE EXISTING LIGHT FIXTURE AND ALL ASSOCIATED ELECTRICAL DEVICES BACK TO THE SOURCE. RETURN LIGHT FIXTURE TO OWNER.
2. DISCONNECT AND REMOVE THE EXISTING LIGHT FIXTURE AND ALL ASSOCIATED ELECTRICAL DEVICES BACK TO THE SOURCE. THE DESIGN INTENT IS TO REUSE THE EXISTING LIGHT FIXTURE IN THE K-8 GYM. STORE AND PROTECT THE FIXTURE AS REQUIRED. CLEAN AND PREPARE THE FIXTURES FOR INSTALLATION IN THE K-8 GYM.
3. DISCONNECT AND REMOVE THE EXISTING DUCT SMOKE DETECTORS ON THE EXISTING MECHANICAL UNIT. THE DESIGN INTENT IS TO REPLACE WITH NEW AS A PART OF THE NEW FIRE ALARM SYSTEM.

STATE OF MICHIGAN
August 28, 2026
MAI #2026-01014

KEY PLAN

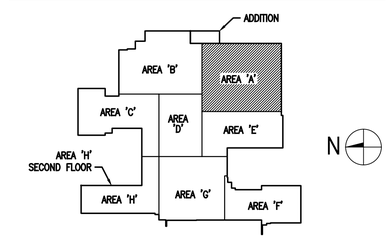

MACMILLAN ASSOCIATES
CONSULTING ENGINEERS
714 EAST MIDLAND STREET • BAY CITY, MICHIGAN 48706
(989) 894-4300 F (989) 894-9930 WWW.MACMILLANASSOCIATES.COM

INTEGRATED DESIGNS INC.
ARCHITECTURE
ENGINEERING
CONSULTING
MARQUETTE OFFICE:
1021 W. BARAGA AVENUE
MARQUETTE, MI 49855
PHONE: (906)228-4660
FAX: (906)228-7524
BRIGHTON OFFICE:
8011 W. GRAND RIVER AVE., SUITE 600
BRIGHTON, MI 48116
PHONE: (810)229-2701
FAX: (810)229-6787

HARBOR BEACH PUBLIC SCHOOLS
PHASE 1 - 2026 ADDITION & RENOVATIONS
HARBOR BEACH, MICHIGAN
PROJECT NO. 24-128

NO.	REVISIONS	DATE
0	FOR CONSTRUCTION	08/28/26

	BY	DATE
DESIGN	BS	08/28/26
DRAWN	RLM	08/28/26
CHECKED	BS	08/28/26
APPROVED	JWF	08/28/26

FLOOR PLAN AREA 'A' - ELECTRICAL DEMOLITION

COPYRIGHT © 2025 INTEGRATED DESIGNS INC.

E1.1

FLOOR PLAN AREA 'B' - ELECTRICAL DEMOLITION

1/8"=1'-0"

GENERAL NOTES - DEMOLITION

1. ELECTRICAL CONTRACTOR SHALL REMOVE AND PROPERLY DISPOSE OF ALL FIXTURES, LAMPS, BALLASTS AND WIRING SHOWN FOR DEMOLITION.
2. ELECTRICAL CONTRACTOR SHALL REMOVE ALL BLANK COVERS ON BOXES TO CONFIRM THE TYPE OF WIRING, POWER OR LOW VOLTAGE. REMOVE ALL WIRING, BOXES IF EMPTY SHALL BE REMOVED FOR WALL PATCHING.
3. ALL ITEMS SHOWN DASHED SHALL BE REMOVED UNLESS OTHERWISE NOTED.
4. REMOVE ALL CONDUIT AND WIRING BACK TO SOURCE FOR ALL DEVICES SHOWN TO BE REMOVED UNLESS OTHERWISE NOTED.
5. REMOVE ALL FIRE ALARM DEVICES. AS NOTED BACK TO EXISTING MAIN FIRE ALARM CONTROL PANEL.THE DESIGN INTENT IS TO INSTALL A NEW FIRE ALARM SYSTEM IN THE SAME LOCATIONS UTILIZING EXISTING ROUGH-INS. NEW LOCATIONS WILL BE ADDED TO PROVIDE PROPER COVERAGE. REFER TO NEW FIRE ALARM DRAWINGS.
6. REMOVE ALL HANGERS, SUPPORTS AND STRAPS ASSOCIATED WITH ITEMS BEING REMOVED.
7. DEVICE LOCATIONS ARE SHOWN DIAGRAMMATICALLY. FIELD CONFIRM EXACT LOCATION.
8. FOR ALL DEMOLITION ITEMS NOT SHOWN, CONTRACTORS SHALL FIELD VERIFY THE EXTENT AND QUANTITY OF DEMOLITION AND ALSO FULLY COORDINATE WITH THE ARCHITECTURAL AND MECHANICAL DRAWINGS.
9. ELECTRICAL CONTRACTOR SHALL PROVIDE BLANK COVERS FOR ALL ROUGH IN LOCATIONS NOT IN USE.
10. FOR ALL DEVICES SHOWN AS DEMO AND THE LOCATION IS NOT REUSED, PROVIDE BLANK COVER UNLESS SPECIFICALLY NOTED BY ARCHITECT.

KEYED NOTES - DEMOLITION

1. DISCONNECT THE EXISTING UNIT VENTILATOR. THE DESIGN INTENT IS THE MECHANICAL TRADES ARE GOING TO ROTATE THE UNIT IN PREPARATION FOR THE NEW ADDITION INSTALLATION. ELECTRICAL CONTRACTOR SHALL DISCONNECT AND RECONNECT THE UNIT. SPLICE/EXTEND AND REWORK THE CIRCUIT AS REQUIRED.
2. DISCONNECT AND REMOVE THE EXISTING MECHANICAL UNIT CIRCUIT BACK TO THE SOURCE. REMOVE ALL ASSOCIATED ELECTRICAL DEVICES BACK TO THE SOURCE.
3. PULL STATION TO BE REMOVED. NEW PULL STATION LOCATION WILL BE LOCATED IN THE NEW ADMIN ADDITION.
4. DISCONNECT AND REMOVE CAMERA. CAMERA T O BE REINSTALLED IN NEW LOCATION.
5. DISCONNECT AND REMOVE EXTERIOR LIGHT FIXTURE. REMOVE ALL CONDUIT AND WIRING BACK TO THE NEAREST JUNCTION BOX OUTSIDE THE SCOPE OF WORK.
6. DISCONNECT AND REMOVE THE EXISTING DUCT SMOKE DETECTORS ON THE EXISTING MECHANICAL UNIT. THE DESIGN INTENT IS TO REPLACE WITH NEW AS A PART OF THE NEW FIRE ALARM SYSTEM.

STATE OF MICHIGAN
August 28, 2026
MAI #2026-01014

KEY PLAN

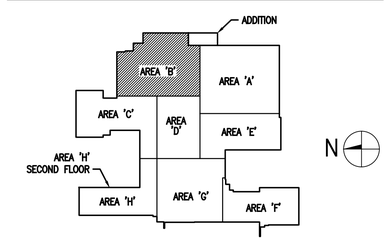

MACMILLAN ASSOCIATES
CONSULTING ENGINEERS
714 EAST MIDLAND STREET • BAY CITY, MICHIGAN 48706
(989) 894-4300 F (989) 894-9930 WWW.MACMILLANASSOCIATES.COM

MARQUETTE OFFICE:
1021 W. BARGA AVENUE
MARQUETTE, MI 49855
PHONE: (906)228-4660
FAX: (906)228-7524
BRIGHTON OFFICE:
8011 W. GRAND RIVER AVE., SUITE 600
BRIGHTON, MI 48116
PHONE: (810)229-2701
FAX: (810)229-4787

ARCHITECTURE ENGINEERING CONSULTING
INTEGRATED DESIGNS INC.

HARBOR BEACH PUBLIC SCHOOLS
PHASE 1 - 2026 ADDITION & RENOVATIONS
HARBOR BEACH, MICHIGAN
PROJECT NO. 24-128

	BY	DATE
DESIGN	BS	08/28/26
DRAWN	RLM	08/28/26
CHECKED	BS	08/28/26
APPROVED	JWF	08/28/26

NO.	REVISIONS	DATE
0	FOR CONSTRUCTION	08/28/26

FLOOR PLAN AREA 'B' - ELECTRICAL DEMOLITION

COPYRIGHT © 2025 INTEGRATED DESIGNS INC.

E1.2

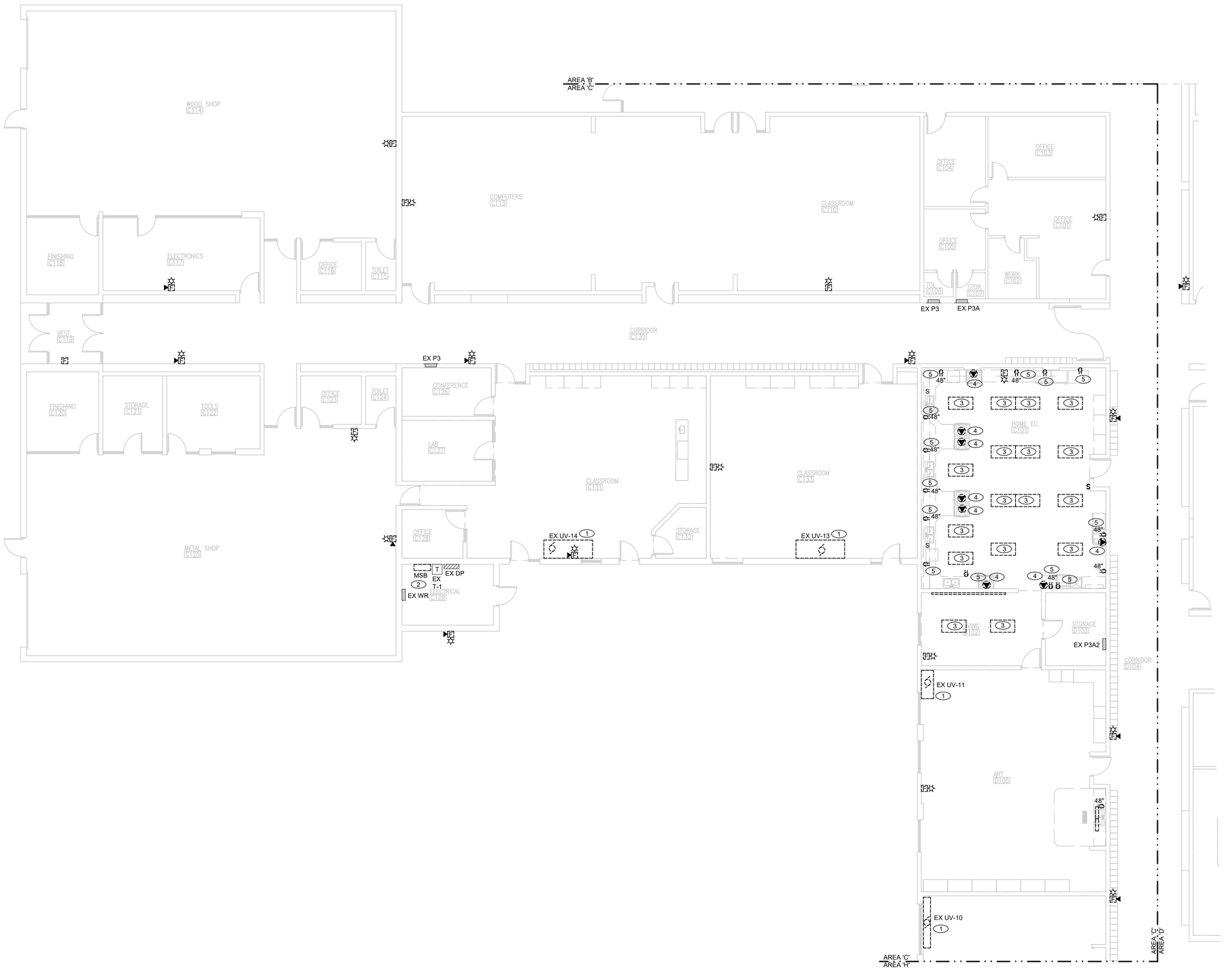

FLOOR PLAN AREA 'C' - ELECTRICAL DEMOLITION
1/8"=1'-0"

GENERAL NOTES - DEMOLITION

1. ELECTRICAL CONTRACTOR SHALL REMOVE AND PROPERLY DISPOSE OF ALL FIXTURES, LAMPS, BALLASTS AND WIRING SHOWN FOR DEMOLITION.
2. ELECTRICAL CONTRACTOR SHALL REMOVE ALL BLANK COVERS ON BOXES TO CONFIRM THE TYPE OF WIRING, POWER OR LOW VOLTAGE. REMOVE ALL WIRING, BOXES IF EMPTY SHALL BE REMOVED FOR WALL PATCHING.
3. ALL ITEMS SHOWN DASHED SHALL BE REMOVED UNLESS OTHERWISE NOTED.
4. REMOVE ALL CONDUIT AND WIRING BACK TO SOURCE FOR ALL DEVICES SHOWN TO BE REMOVED UNLESS OTHERWISE NOTED.
5. REMOVE ALL FIRE ALARM DEVICES. AS NOTED BACK TO EXISTING MAIN FIRE ALARM CONTROL PANEL.THE DESIGN INTENT IS TO INSTALL A NEW FIRE ALARM SYSTEM IN THE SAME LOCATIONS UTILIZING EXISTING ROUGH-INS. NEW LOCATIONS WILL BE ADDED TO PROVIDE PROPER COVERAGE. REFER TO NEW FIRE ALARM DRAWINGS.
6. REMOVE ALL HANGERS, SUPPORTS AND STRAPS ASSOCIATED WITH ITEMS BEING REMOVED.
7. DEVICE LOCATIONS ARE SHOWN DIAGRAMMATICALLY. FIELD CONFIRM EXACT LOCATION.
8. FOR ALL DEMOLITION ITEMS NOT SHOWN, CONTRACTORS SHALL FIELD VERIFY THE EXTENT AND QUANTITY OF DEMOLITION AND ALSO FULLY COORDINATE WITH THE ARCHITECTURAL AND MECHANICAL DRAWINGS.
9. ELECTRICAL CONTRACTOR SHALL PROVIDE BLANK COVERS FOR ALL ROUGH IN LOCATIONS NOT IN USE.
10. FOR ALL DEVICES SHOWN AS DEMO AND THE LOCATION IS NOT REUSED, PROVIDE BLANK COVER UNLESS SPECIFICALLY NOTED BY ARCHITECT.

KEYED NOTES - DEMOLITION

1. DISCONNECT THE EXISTING UNIT VENTILATOR'S 120 VOLT CIRCUIT FOR RECONNECTION TO THE NEW UNIT VENTILATOR. EXTEND AND REWORK THE EXISTING AS REQUIRED. CONFIRM THE CIRCUIT SOURCE AS SHOWN. TRACE THE CIRCUIT FOR THE UNIT VENTILATORS NOT SHOWN WITH A CIRCUIT NUMBER AND SOURCE. UPDATE THE PANELBOARD DIRECTORY ACCORDINGLY.
2. ELECTRICAL CONTRACTOR SHALL DISCONNECT AND REMOVE EXISTING MSB (AREA D) SWITCHBOARD. THE DESIGN INTENT IS TO REPLACE ONE FOR ONE WITH NEW IN THE SAME LOCATION.
3. ELECTRICAL CONTRACTOR SHALL DISCONNECT AND REMOVE EXISTING LIGHT FIXTURE AND ASSOCIATED WIRING BACK TO THE SOURCE.
4. DISCONNECT AND REMOVE EXISTING OVEN RECEPTACLES BACK TO THE SOURCE. THE DESIGN INTENT IS TO REFEED THE OVENS FROM A NEW PANELBOARD.
5. DISCONNECT AND REMOVE SURFACE MOUNTED RECEPTACLES AND ALL ASSOCIATED ELECTRICAL DEVICES BACK TO THE SOURCE.

STATE OF MICHIGAN
BRIAN SCHMIDT
ENGINEER
August 28, 2026
MAI #2026-01014

KEY PLAN

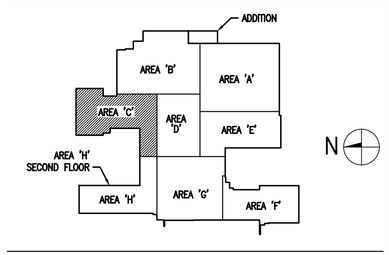

MACMILLAN ASSOCIATES
CONSULTING ENGINEERS
714 EAST MIDLAND STREET • BAY CITY, MICHIGAN 48706
(989) 894-4300 F (989) 894-9930 WWW.MACMILLANASSOCIATES.COM

MARQUETTE OFFICE:
1021 W. BARAGA AVENUE
MARQUETTE, MI 49855
PHONE: (906)228-4660
FAX: (906)228-7524
BRIGHTON OFFICE:
8011 W. GRAND RIVER AVE., SUITE 600
BRIGHTON, MI 48116
PHONE: (810)229-2701
FAX: (810)229-6787

ARCHITECTURE ENGINEERING CONSULTING
INTEGRATED DESIGNS INC.

HARBOR BEACH PUBLIC SCHOOLS
PHASE 1 - 2026 ADDITION & RENOVATIONS
HARBOR BEACH, MICHIGAN
PROJECT NO. 24-128

	BY	DATE
DESIGN	BS	08/28/26
DRAWN	RLM	08/28/26
CHECKED	BS	08/28/26
APPROVED	JWF	08/28/26

NO.	REVISIONS	DATE
0	FOR CONSTRUCTION	08/28/26

FLOOR PLAN AREA 'C' - ELECTRICAL DEMOLITION

COPYRIGHT © 2025 INTEGRATED DESIGNS INC.

E1.3

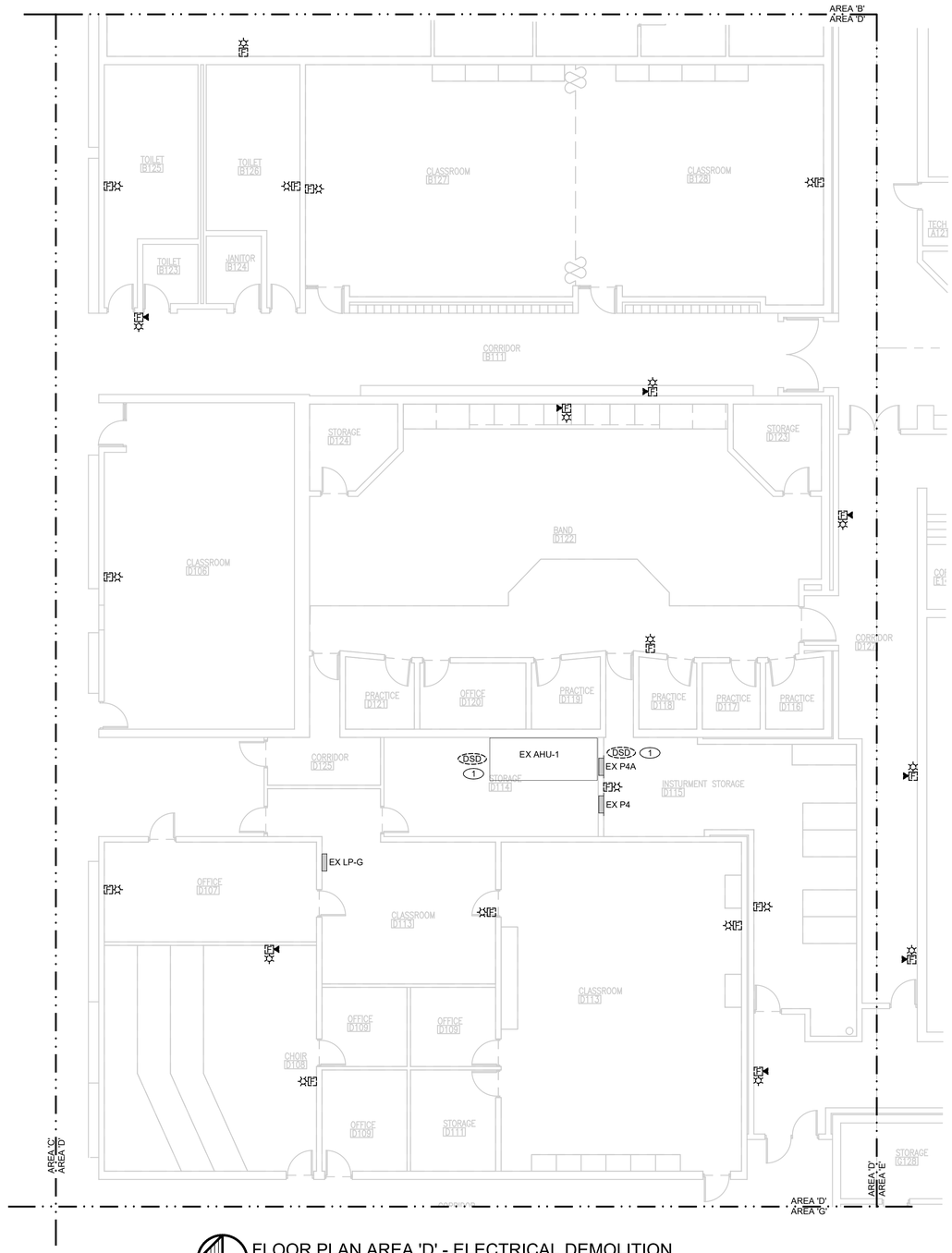

FLOOR PLAN AREA 'D' - ELECTRICAL DEMOLITION
1/8"=1'-0"

GENERAL NOTES - DEMOLITION

1. ELECTRICAL CONTRACTOR SHALL REMOVE AND PROPERLY DISPOSE OF ALL FIXTURES, LAMPS, BALLASTS AND WIRING SHOWN FOR DEMOLITION.
2. ELECTRICAL CONTRACTOR SHALL REMOVE ALL BLANK COVERS ON BOXES TO CONFIRM THE TYPE OF WIRING, POWER OR LOW VOLTAGE. REMOVE ALL WIRING, BOXES IF EMPTY SHALL BE REMOVED FOR WALL PATCHING.
3. ALL ITEMS SHOWN DASHED SHALL BE REMOVED UNLESS OTHERWISE NOTED.
4. REMOVE ALL CONDUIT AND WIRING BACK TO SOURCE FOR ALL DEVICES SHOWN TO BE REMOVED UNLESS OTHERWISE NOTED.
5. REMOVE ALL FIRE ALARM DEVICES. AS NOTED BACK TO EXISTING MAIN FIRE ALARM CONTROL PANEL.THE DESIGN INTENT IS TO INSTALL A NEW FIRE ALARM SYSTEM IN THE SAME LOCATIONS UTILIZING EXISTING ROUGH-INS. NEW LOCATIONS WILL BE ADDED TO PROVIDE PROPER COVERAGE. REFER TO NEW FIRE ALARM DRAWINGS.
6. REMOVE ALL HANGERS, SUPPORTS AND STRAPS ASSOCIATED WITH ITEMS BEING REMOVED.
7. DEVICE LOCATIONS ARE SHOWN DIAGRAMMATICALLY. FIELD CONFIRM EXACT LOCATION.
8. FOR ALL DEMOLITION ITEMS NOT SHOWN, CONTRACTORS SHALL FIELD VERIFY THE EXTENT AND QUANTITY OF DEMOLITION AND ALSO FULLY COORDINATE WITH THE ARCHITECTURAL AND MECHANICAL DRAWINGS.
9. ELECTRICAL CONTRACTOR SHALL PROVIDE BLANK COVERS FOR ALL ROUGH IN LOCATIONS NOT IN USE.
10. FOR ALL DEVICES SHOWN AS DEMO AND THE LOCATION IS NOT REUSED, PROVIDE BLANK COVER UNLESS SPECIFICALLY NOTED BY ARCHITECT.

KEYED NOTES - DEMOLITION

1. DISCONNECT AND REMOVE THE EXISTING DUCT SMOKE DETECTORS ON THE EXISTING MECHANICAL UNIT. THE DESIGN INTENT IS TO REPLACE WITH NEW AS A PART OF THE NEW FIRE ALARM SYSTEM.

STATE OF MICHIGAN
August 28, 2026
MAI #2026-01014

KEY PLAN

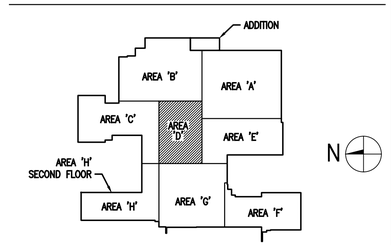

MACMILLAN ASSOCIATES
CONSULTING ENGINEERS
714 EAST MIDLAND STREET • BAY CITY, MICHIGAN 48706
(989) 894-4300 F (989) 894-9930 WWW.MACMILLANASSOCIATES.COM

MARQUETTE OFFICE:
1021 W. BARGA AVENUE
MARQUETTE, MI 49855
PHONE: (906)228-4660
FAX: (906)228-7524
BRIGHTON OFFICE:
8011 W. GRAND RIVER AVE., SUITE 600
BRIGHTON, MI 48116
PHONE: (810)229-2701
FAX: (810)229-6787

ARCHITECTURE ENGINEERING CONSULTING
INTEGRATED DESIGNS INC.

HARBOR BEACH PUBLIC SCHOOLS
PHASE 1 - 2026 ADDITION & RENOVATIONS
HARBOR BEACH, MICHIGAN
PROJECT NO. 24-128

NO.	REVISIONS	DATE
0	FOR CONSTRUCTION	08/28/26

	BY	DATE
DESIGN	BS	08/28/26
DRAWN	RLM	08/28/26
CHECKED	BS	08/28/26
APPROVED	JWF	08/28/26

FLOOR PLAN AREA 'D' - ELECTRICAL DEMOLITION

COPYRIGHT © 2025 INTEGRATED DESIGNS INC.

E1.4

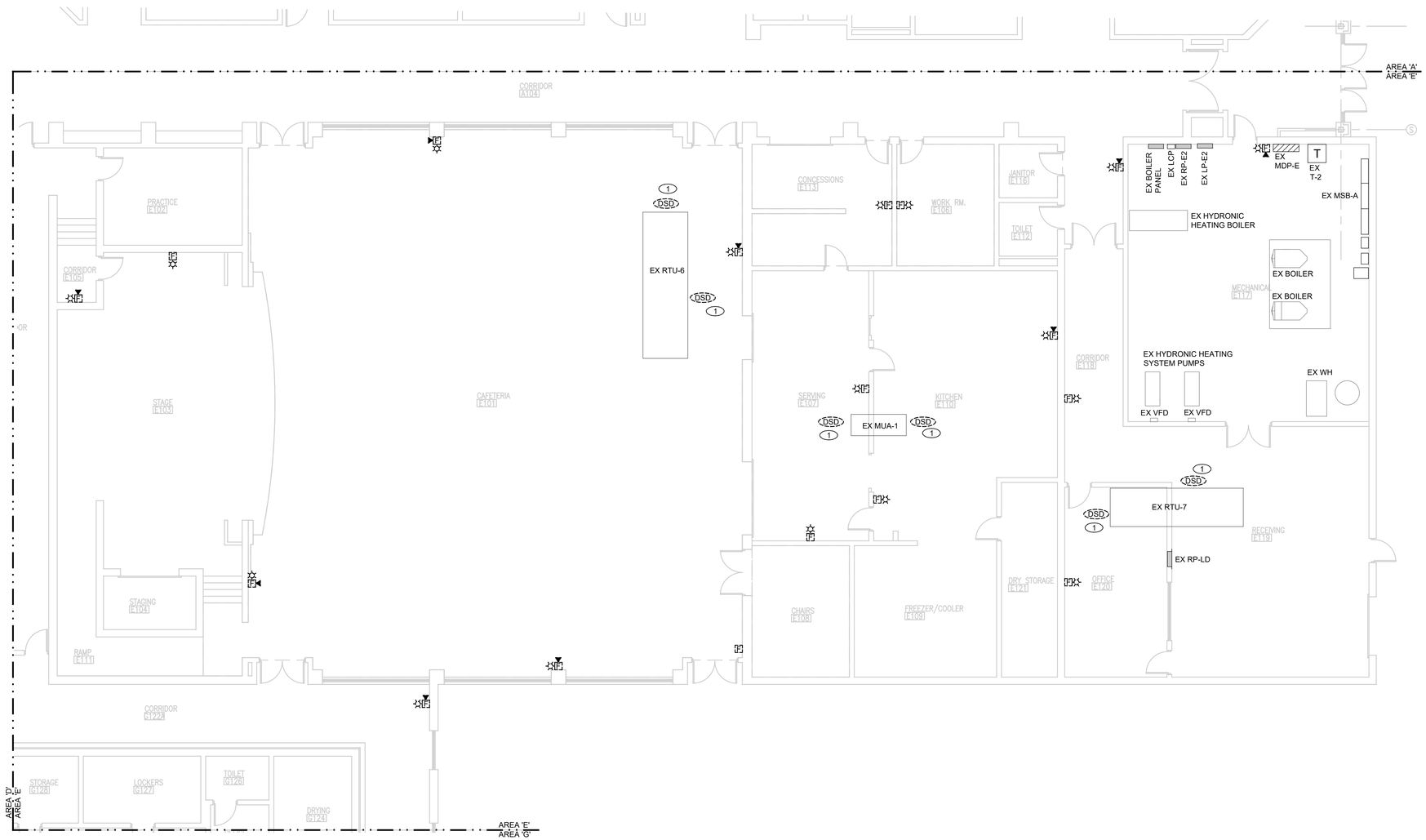

FLOOR PLAN AREA 'E' - ELECTRICAL DEMOLITION
1/8"=1'-0"

GENERAL NOTES - DEMOLITION

1. ELECTRICAL CONTRACTOR SHALL REMOVE AND PROPERLY DISPOSE OF ALL FIXTURES, LAMPS, BALLASTS AND WIRING SHOWN FOR DEMOLITION.
2. ELECTRICAL CONTRACTOR SHALL REMOVE ALL BLANK COVERS ON BOXES TO CONFIRM THE TYPE OF WIRING, POWER OR LOW VOLTAGE. REMOVE ALL WIRING, BOXES IF EMPTY SHALL BE REMOVED FOR WALL PATCHING.
3. ALL ITEMS SHOWN DASHED SHALL BE REMOVED UNLESS OTHERWISE NOTED.
4. REMOVE ALL CONDUIT AND WIRING BACK TO SOURCE FOR ALL DEVICES SHOWN TO BE REMOVED UNLESS OTHERWISE NOTED.
5. REMOVE ALL FIRE ALARM DEVICES. AS NOTED BACK TO EXISTING MAIN FIRE ALARM CONTROL PANEL.THE DESIGN INTENT IS TO INSTALL A NEW FIRE ALARM SYSTEM IN THE SAME LOCATIONS UTILIZING EXISTING ROUGH-INS. NEW LOCATIONS WILL BE ADDED TO PROVIDE PROPER COVERAGE. REFER TO NEW FIRE ALARM DRAWINGS.
6. REMOVE ALL HANGERS, SUPPORTS AND STRAPS ASSOCIATED WITH ITEMS BEING REMOVED.
7. DEVICE LOCATIONS ARE SHOWN DIAGRAMMATICALLY. FIELD CONFIRM EXACT LOCATION.
8. FOR ALL DEMOLITION ITEMS NOT SHOWN, CONTRACTORS SHALL FIELD VERIFY THE EXTENT AND QUANTITY OF DEMOLITION AND ALSO FULLY COORDINATE WITH THE ARCHITECTURAL AND MECHANICAL DRAWINGS.
9. ELECTRICAL CONTRACTOR SHALL PROVIDE BLANK COVERS FOR ALL ROUGH IN LOCATIONS NOT IN USE.
10. FOR ALL DEVICES SHOWN AS DEMO AND THE LOCATION IS NOT REUSED, PROVIDE BLANK COVER UNLESS SPECIFICALLY NOTED BY ARCHITECT.

KEYED NOTES - DEMOLITION

1. DISCONNECT AND REMOVE THE EXISTING DUCT SMOKE DETECTORS ON THE EXISTING MECHANICAL UNIT. THE DESIGN INTENT IS TO REPLACE WITH NEW AS A PART OF THE NEW FIRE ALARM SYSTEM.

STATE OF MICHIGAN
August 28, 2026
MAI #2026-01014

KEY PLAN

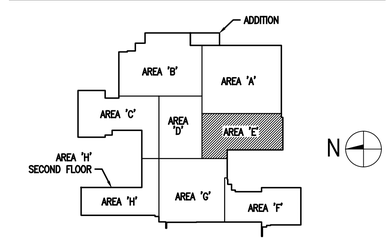

MACMILLAN ASSOCIATES
CONSULTING ENGINEERS
714 EAST MIDLAND STREET • BAY CITY, MICHIGAN 48706
(989) 894-4300 F (989) 894-9930 WWW.MACMILLANASSOCIATES.COM

MARQUETTE OFFICE:
1021 W. BARAGA AVENUE
MARQUETTE, MI 49855
PHONE: (906)228-4600
FAX: (906)228-7524
BRIGHTON OFFICE:
8011 W. GRAND RIVER AVE., SUITE 600
BRIGHTON, MI 48116
PHONE: (810)229-2701
FAX: (810)229-6787
INTEGRATED DESIGNS INC.
ARCHITECTURE
ENGINEERING
CONSULTING

HARBOR BEACH PUBLIC SCHOOLS
PHASE 1 - 2026 ADDITION & RENOVATIONS
HARBOR BEACH, MICHIGAN
PROJECT NO. 24-128

NO.	REVISIONS	DATE
0	FOR CONSTRUCTION	08/28/26

	BY	DATE
DESIGN	BS	08/28/26
DRAWN	RLM	08/28/26
CHECKED	BS	08/28/26
APPROVED	JWF	08/28/26

FLOOR PLAN AREA 'E' - ELECTRICAL DEMOLITION

COPYRIGHT © 2025 INTEGRATED DESIGNS INC.

E1.5

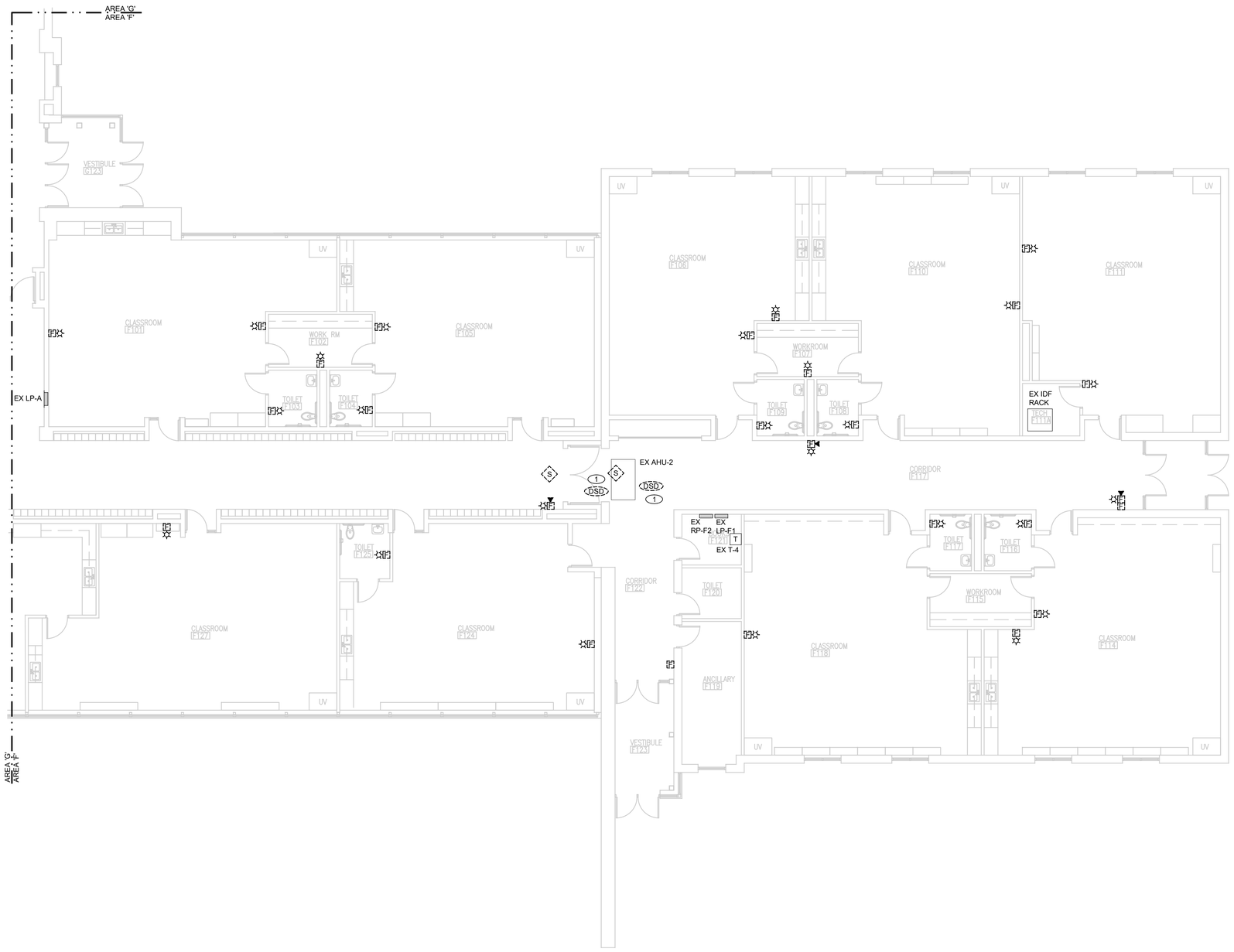

FLOOR PLAN AREA 'F' - ELECTRICAL DEMOLITION
1/8"=1'-0"

GENERAL NOTES - DEMOLITION

1. ELECTRICAL CONTRACTOR SHALL REMOVE AND PROPERLY DISPOSE OF ALL FIXTURES, LAMPS, BALLASTS AND WIRING SHOWN FOR DEMOLITION.
2. ELECTRICAL CONTRACTOR SHALL REMOVE ALL BLANK COVERS ON BOXES TO CONFIRM THE TYPE OF WIRING, POWER OR LOW VOLTAGE. REMOVE ALL WIRING, BOXES IF EMPTY SHALL BE REMOVED FOR WALL PATCHING.
3. ALL ITEMS SHOWN DASHED SHALL BE REMOVED UNLESS OTHERWISE NOTED.
4. REMOVE ALL CONDUIT AND WIRING BACK TO SOURCE FOR ALL DEVICES SHOWN TO BE REMOVED UNLESS OTHERWISE NOTED.
5. REMOVE ALL FIRE ALARM DEVICES. AS NOTED BACK TO EXISTING MAIN FIRE ALARM CONTROL PANEL.THE DESIGN INTENT IS TO INSTALL A NEW FIRE ALARM SYSTEM IN THE SAME LOCATIONS UTILIZING EXISTING ROUGH-INS. NEW LOCATIONS WILL BE ADDED TO PROVIDE PROPER COVERAGE. REFER TO NEW FIRE ALARM DRAWINGS.
6. REMOVE ALL HANGERS, SUPPORTS AND STRAPS ASSOCIATED WITH ITEMS BEING REMOVED.
7. DEVICE LOCATIONS ARE SHOWN DIAGRAMMATICALLY. FIELD CONFIRM EXACT LOCATION.
8. FOR ALL DEMOLITION ITEMS NOT SHOWN, CONTRACTORS SHALL FIELD VERIFY THE EXTENT AND QUANTITY OF DEMOLITION AND ALSO FULLY COORDINATE WITH THE ARCHITECTURAL AND MECHANICAL DRAWINGS.
9. ELECTRICAL CONTRACTOR SHALL PROVIDE BLANK COVERS FOR ALL ROUGH IN LOCATIONS NOT IN USE.
10. FOR ALL DEVICES SHOWN AS DEMO AND THE LOCATION IS NOT REUSED, PROVIDE BLANK COVER UNLESS SPECIFICALLY NOTED BY ARCHITECT.

KEYED NOTES - DEMOLITION

1. DISCONNECT AND REMOVE THE EXISTING DUCT SMOKE DETECTORS ON THE EXISTING MECHANICAL UNIT. THE DESIGN INTENT IS TO REPLACE WITH NEW AS A PART OF THE NEW FIRE ALARM SYSTEM.

STATE OF MICHIGAN
August 28, 2026
MAI #2026-01014

KEY PLAN

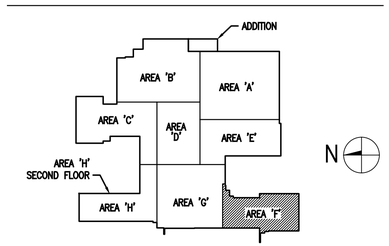

MACMILLAN ASSOCIATES
CONSULTING ENGINEERS
714 EAST MIDLAND STREET • BAY CITY, MICHIGAN 48706
(989) 894-4300 F (989) 894-9930 WWW.MACMILLANASSOCIATES.COM

MARQUETTE OFFICE:
1021 W. BARAGA AVENUE
MARQUETTE, MI 49855
PHONE: (906)228-4600
FAX: (906)228-7524
BRIGHTON OFFICE:
8011 W. GRAND RIVER AVE., SUITE 600
BRIGHTON, MI 48116
PHONE: (810)229-2701
FAX: (810)229-4787
ARCHITECTURE ENGINEERING CONSULTING
INTEGRATED DESIGNS INC.

HARBOR BEACH PUBLIC SCHOOLS
PHASE 1 - 2026 ADDITION & RENOVATIONS
HARBOR BEACH, MICHIGAN
PROJECT NO. 24-128

NO.	REVISIONS	DATE
0	FOR CONSTRUCTION	08-28-26

	BY	DATE
DESIGN	BS	08-28-26
DRAWN	RLM	08-28-26
CHECKED	BS	08-28-26
APPROVED	JWF	08-28-26

FLOOR PLAN AREA 'F' - ELECTRICAL DEMOLITION

COPYRIGHT © 2025 INTEGRATED DESIGNS INC.

E1.6

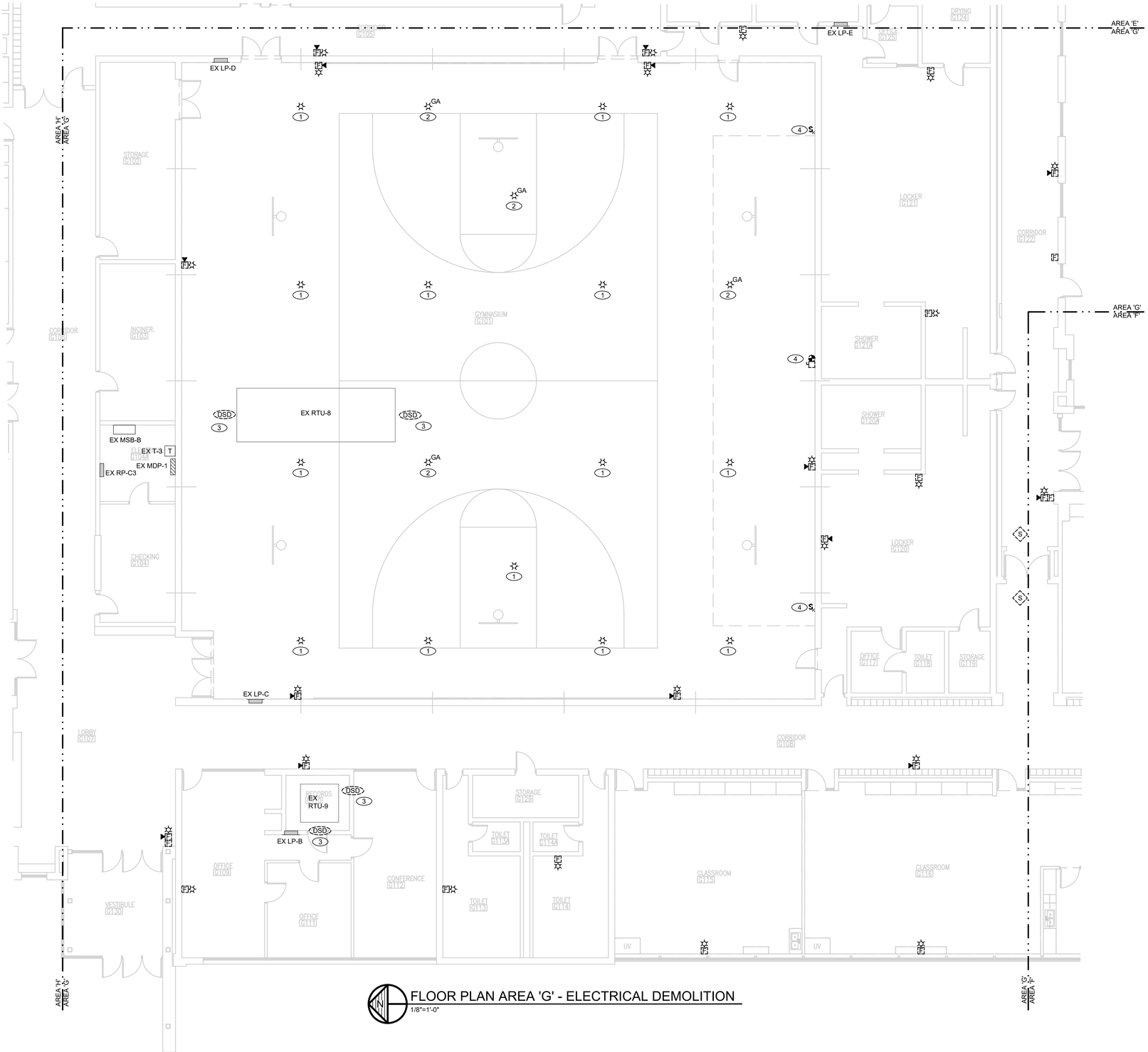

FLOOR PLAN AREA 'G' - ELECTRICAL DEMOLITION
1/8"=1'-0"

GENERAL NOTES - DEMOLITION

1. ELECTRICAL CONTRACTOR SHALL REMOVE AND PROPERLY DISPOSE OF ALL FIXTURES, LAMPS, BALLASTS AND WIRING SHOWN FOR DEMOLITION.
2. ELECTRICAL CONTRACTOR SHALL REMOVE ALL BLANK COVERS ON BOXES TO CONFIRM THE TYPE OF WIRING, POWER OR LOW VOLTAGE. REMOVE ALL WIRING, BOXES IF EMPTY SHALL BE REMOVED FOR WALL PATCHING.
3. ALL ITEMS SHOWN DASHED SHALL BE REMOVED UNLESS OTHERWISE NOTED.
4. REMOVE ALL CONDUIT AND WIRING BACK TO SOURCE FOR ALL DEVICES SHOWN TO BE REMOVED UNLESS OTHERWISE NOTED.
5. REMOVE ALL FIRE ALARM DEVICES. AS NOTED BACK TO EXISTING MAIN FIRE ALARM CONTROL PANEL.THE DESIGN INTENT IS TO INSTALL A NEW FIRE ALARM SYSTEM IN THE SAME LOCATIONS UTILIZING EXISTING ROUGH-INS. NEW LOCATIONS WILL BE ADDED TO PROVIDE PROPER COVERAGE. REFER TO NEW FIRE ALARM DRAWINGS.
6. REMOVE ALL HANGERS, SUPPORTS AND STRAPS ASSOCIATED WITH ITEMS BEING REMOVED.
7. DEVICE LOCATIONS ARE SHOWN DIAGRAMMATICALLY. FIELD CONFIRM EXACT LOCATION.
8. FOR ALL DEMOLITION ITEMS NOT SHOWN, CONTRACTORS SHALL FIELD VERIFY THE EXTENT AND QUANTITY OF DEMOLITION AND ALSO FULLY COORDINATE WITH THE ARCHITECTURAL AND MECHANICAL DRAWINGS.
9. ELECTRICAL CONTRACTOR SHALL PROVIDE BLANK COVERS FOR ALL ROUGH IN LOCATIONS NOT IN USE.
10. FOR ALL DEVICES SHOWN AS DEMO AND THE LOCATION IS NOT REUSED, PROVIDE BLANK COVER UNLESS SPECIFICALLY NOTED BY ARCHITECT.

KEYED NOTES - DEMOLITION

1. DISCONNECT AND REMOVE THE EXISTING LIGHT FIXTURE AND ALL ASSOCIATED ELECTRICAL DEVICES BACK TO THE SOURCE. RETURN LIGHT FIXTURE TO OWNER.
2. DISCONNECT AND REMOVE THE EXISTING LIGHT FIXTURE AND ALL ASSOCIATED ELECTRICAL DEVICES BACK TO THE SOURCE. THE DESIGN INTENT IS TO REUSE THE EXISTING LIGHT FIXTURE IN THE K-8 GYM. STORE AND PROTECT THE FIXTURE AS REQUIRED. CLEAN AND PREPARE THE FIXTURES FOR INSTALLATION IN THE K-8 GYM.
3. DISCONNECT AND REMOVE THE EXISTING DUCT SMOKE DETECTORS ON THE EXISTING MECHANICAL UNIT. THE DESIGN INTENT IS TO REPLACE WITH NEW AS A PART OF THE NEW FIRE ALARM SYSTEM.
4. DISCONNECT AND REMOVE THE EXISTING BLEACHER ELECTRICAL SYSTEM INCLUDING BUT NOT LIMITED TO, DISCONNECTS, SWITCHING, RACEWAYS, FEED. THE DESIGN INTENT IS TO FURNISH AND INSTALL NEW DISCONNECT AND POWER CONNECTIONS FOR THE NEW BLEACHERS.

STATE OF MICHIGAN
August 28, 2026
MAI #2026-01014

KEY PLAN

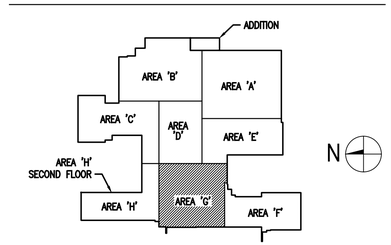

MACMILLAN ASSOCIATES
CONSULTING ENGINEERS
714 EAST MIDLAND STREET • BAY CITY, MICHIGAN 48706
(989) 894-4300 F (989) 894-9930 WWW.MACMILLANASSOCIATES.COM

MARQUETTE OFFICE:
1021 W. BARGA AVENUE
MARQUETTE, MI 49855
PHONE: (906)228-4693
FAX: (906)228-7524
BRIGHTON OFFICE:
8011 W. GRAND RIVER AVE., SUITE 600
BRIGHTON, MI 48116
PHONE: (810)229-2701
FAX: (810)229-8787

ARCHITECTURE ENGINEERING CONSULTING
INTEGRATED DESIGNS INC.

HARBOR BEACH PUBLIC SCHOOLS
PHASE 1 - 2026 ADDITION & RENOVATIONS
HARBOR BEACH, MICHIGAN
PROJECT NO. 24-128

	BY	DATE
DESIGN	BS	08/28/26
DRAWN	RLM	08/28/26
CHECKED	BS	08/28/26
APPROVED	JWF	08/28/26

NO.	REVISIONS	DATE
0	FOR CONSTRUCTION	08/28/26

FLOOR PLAN AREA 'G' - ELECTRICAL DEMOLITION

COPYRIGHT © 2025 INTEGRATED DESIGNS INC.

E1.7

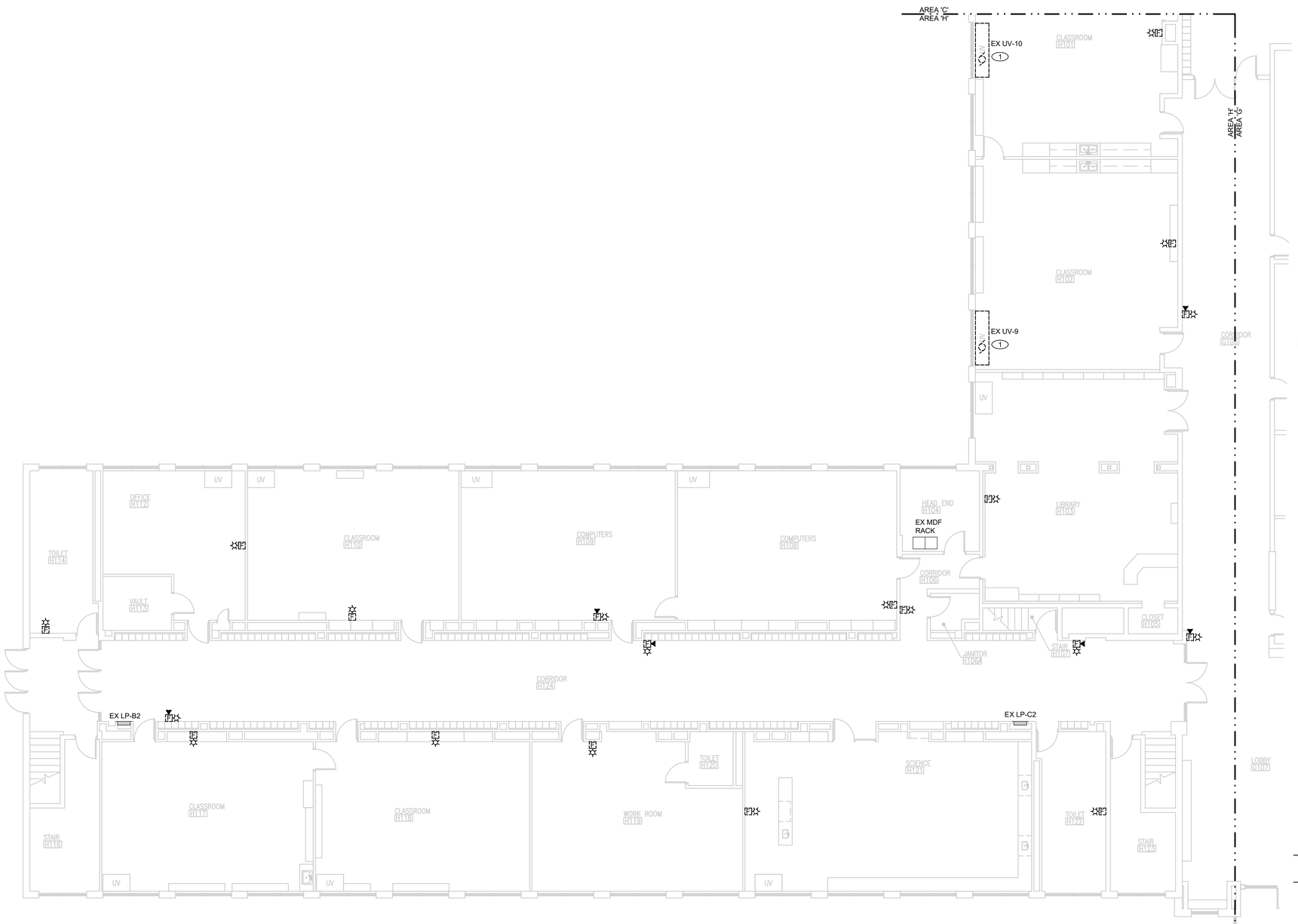

FLOOR PLAN AREA 'H' - ELECTRICAL DEMOLITION
1/8"=1'-0"

GENERAL NOTES - DEMOLITION

1. ELECTRICAL CONTRACTOR SHALL REMOVE AND PROPERLY DISPOSE OF ALL FIXTURES, LAMPS, BALLASTS AND WIRING SHOWN FOR DEMOLITION.
2. ELECTRICAL CONTRACTOR SHALL REMOVE ALL BLANK COVERS ON BOXES TO CONFIRM THE TYPE OF WIRING, POWER OR LOW VOLTAGE. REMOVE ALL WIRING, BOXES IF EMPTY SHALL BE REMOVED FOR WALL PATCHING.
3. ALL ITEMS SHOWN DASHED SHALL BE REMOVED UNLESS OTHERWISE NOTED.
4. REMOVE ALL CONDUIT AND WIRING BACK TO SOURCE FOR ALL DEVICES SHOWN TO BE REMOVED UNLESS OTHERWISE NOTED.
5. REMOVE ALL FIRE ALARM DEVICES. AS NOTED BACK TO EXISTING MAIN FIRE ALARM CONTROL PANEL.THE DESIGN INTENT IS TO INSTALL A NEW FIRE ALARM SYSTEM IN THE SAME LOCATIONS UTILIZING EXISTING ROUGH-INS. NEW LOCATIONS WILL BE ADDED TO PROVIDE PROPER COVERAGE. REFER TO NEW FIRE ALARM DRAWINGS.
6. REMOVE ALL HANGERS, SUPPORTS AND STRAPS ASSOCIATED WITH ITEMS BEING REMOVED.
7. DEVICE LOCATIONS ARE SHOWN DIAGRAMMATICALLY. FIELD CONFIRM EXACT LOCATION.
8. FOR ALL DEMOLITION ITEMS NOT SHOWN, CONTRACTORS SHALL FIELD VERIFY THE EXTENT AND QUANTITY OF DEMOLITION AND ALSO FULLY COORDINATE WITH THE ARCHITECTURAL AND MECHANICAL DRAWINGS.
9. ELECTRICAL CONTRACTOR SHALL PROVIDE BLANK COVERS FOR ALL ROUGH IN LOCATIONS NOT IN USE.
10. FOR ALL DEVICES SHOWN AS DEMO AND THE LOCATION IS NOT REUSED, PROVIDE BLANK COVER UNLESS SPECIFICALLY NOTED BY ARCHITECT.

KEYED NOTES - DEMOLITION

1. DISCONNECT THE EXISTING UNIT VENTILATOR'S 120 VOLT CIRCUIT FOR RECONNECTION TO THE NEW UNIT VENTILATOR. EXTEND AND REWORK THE EXISTING AS REQUIRED. CONFIRM THE CIRCUIT SOURCE AS SHOWN. TRACE THE CIRCUIT FOR THE UNIT VENTILATORS NOT SHOWN WITH A CIRCUIT NUMBER AND SOURCE. UPDATE THE PANELBOARD DIRECTORY ACCORDINGLY.

STATE OF MICHIGAN
August 28, 2026
MAI #2026-01014

KEY PLAN

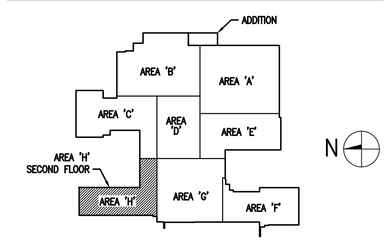

MACMILLAN ASSOCIATES
CONSULTING ENGINEERS
714 EAST MIDLAND STREET • BAY CITY, MICHIGAN 48706
(989) 894-4300 F (989) 894-9930 WWW.MACMILLANASSOCIATES.COM

MARQUETTE OFFICE:
1021 W. BARGA AVENUE
MARQUETTE, MI 49855
PHONE: (906)228-4493
FAX: (906)228-7524
BRIGHTON OFFICE:
8011 W. GRAND RIVER AVE., SUITE 600
BRIGHTON, MI 48116
PHONE: (810)229-2701
FAX: (810)229-4787

ARCHITECTURE ENGINEERING CONSULTING
INTEGRATED DESIGNS INC.

HARBOR BEACH PUBLIC SCHOOLS
PHASE 1 - 2026 ADDITION & RENOVATIONS
HARBOR BEACH, MICHIGAN
PROJECT NO. 24-128

NO.	REVISIONS	DATE
0	FOR CONSTRUCTION	08/28/26

	BY	DATE
DESIGN	BS	08/28/26
DRAWN	RLM	08/28/26
CHECKED	BS	08/28/26
APPROVED	JWF	08/28/26

FLOOR PLAN AREA 'H' - ELECTRICAL DEMOLITION

COPYRIGHT © 2025 INTEGRATED DESIGNS INC.

E1.8

GENERAL NOTES - DEMOLITION

1. ELECTRICAL CONTRACTOR SHALL REMOVE AND PROPERLY DISPOSE OF ALL FIXTURES, LAMPS, BALLASTS AND WIRING SHOWN FOR DEMOLITION.
2. ELECTRICAL CONTRACTOR SHALL REMOVE ALL BLANK COVERS ON BOXES TO CONFIRM THE TYPE OF WIRING, POWER OR LOW VOLTAGE. REMOVE ALL WIRING, BOXES IF EMPTY SHALL BE REMOVED FOR WALL PATCHING.
3. ALL ITEMS SHOWN DASHED SHALL BE REMOVED UNLESS OTHERWISE NOTED.
4. REMOVE ALL CONDUIT AND WIRING BACK TO SOURCE FOR ALL DEVICES SHOWN TO BE REMOVED UNLESS OTHERWISE NOTED.
5. REMOVE ALL FIRE ALARM DEVICES. AS NOTED BACK TO EXISTING MAIN FIRE ALARM CONTROL PANEL.THE DESIGN INTENT IS TO INSTALL A NEW FIRE ALARM SYSTEM IN THE SAME LOCATIONS UTILIZING EXISTING ROUGH-INS. NEW LOCATIONS WILL BE ADDED TO PROVIDE PROPER COVERAGE. REFER TO NEW FIRE ALARM DRAWINGS.
6. REMOVE ALL HANGERS, SUPPORTS AND STRAPS ASSOCIATED WITH ITEMS BEING REMOVED.
7. DEVICE LOCATIONS ARE SHOWN DIAGRAMMATICALLY. FIELD CONFIRM EXACT LOCATION.
8. FOR ALL DEMOLITION ITEMS NOT SHOWN, CONTRACTORS SHALL FIELD VERIFY THE EXTENT AND QUANTITY OF DEMOLITION AND ALSO FULLY COORDINATE WITH THE ARCHITECTURAL AND MECHANICAL DRAWINGS.
9. ELECTRICAL CONTRACTOR SHALL PROVIDE BLANK COVERS FOR ALL ROUGH IN LOCATIONS NOT IN USE.
10. FOR ALL DEVICES SHOWN AS DEMO AND THE LOCATION IS NOT REUSED, PROVIDE BLANK COVER UNLESS SPECIFICALLY NOTED BY ARCHITECT.

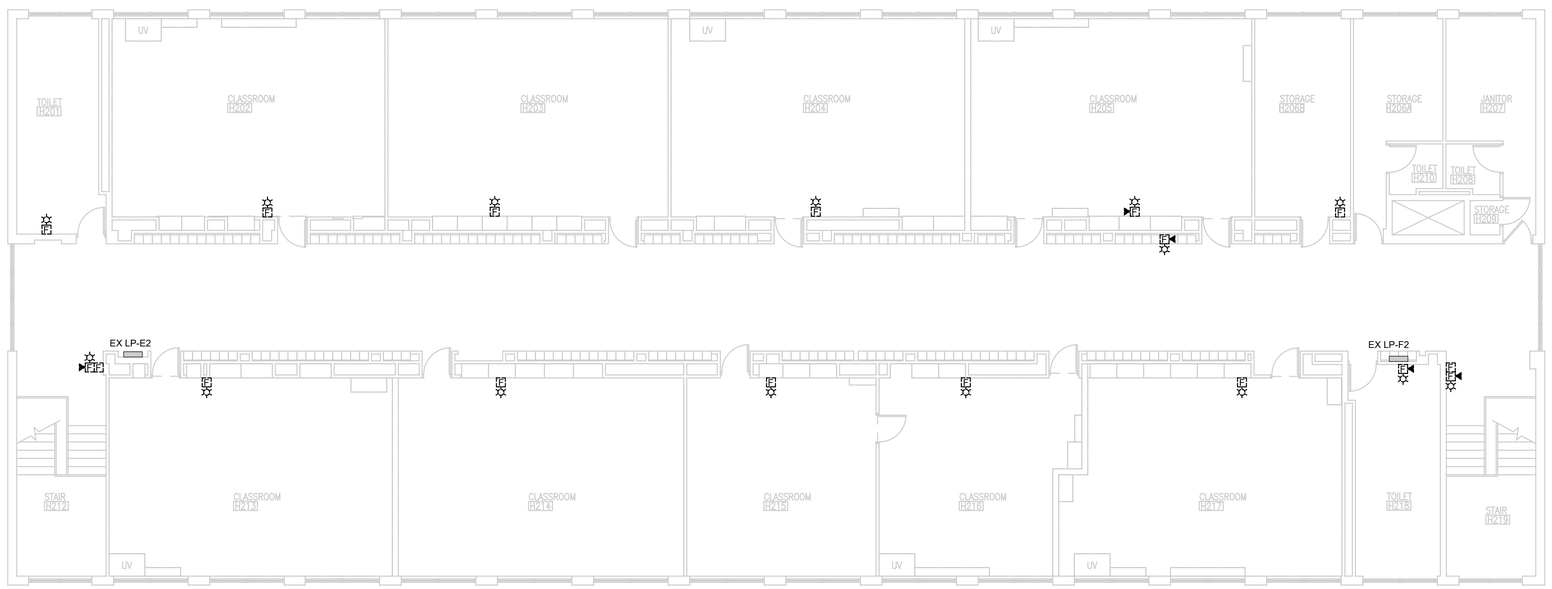

FLOOR PLAN AREA 'H' - SECOND FLOOR - ELECTRICAL DEMOLITION
1/8"=1'-0"

STATE OF MICHIGAN
August 28, 2026
MAI #2026-01014

KEY PLAN

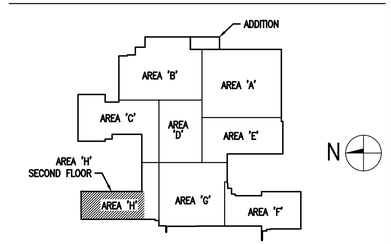

MACMILLAN ASSOCIATES
CONSULTING ENGINEERS
714 EAST MIDLAND STREET • BAY CITY, MICHIGAN 48706
(989) 894-4300 F (989) 894-9930 WWW.MACMILLANASSOCIATES.COM

MARQUETTE OFFICE:
1021 W. BARAGA AVENUE
MARQUETTE, MI 49855
PHONE: (906)228-4660
FAX: (906)228-7524
BRIGHTON OFFICE:
8011 W. GRAND RIVER AVE., SUITE 600
BRIGHTON, MI 48116
PHONE: (810)229-2701
FAX: (810)229-4787

ARCHITECTURE ENGINEERING CONSULTING
INTEGRATED DESIGNS INC.

HARBOR BEACH PUBLIC SCHOOLS
PHASE 1 - 2026 ADDITION & RENOVATIONS
HARBOR BEACH, MICHIGAN
PROJECT NO. 24-128

NO.	REVISIONS	DATE
0	FOR CONSTRUCTION	08/28/26

	BY	DATE
DESIGN	BS	08/28/26
DRAWN	RLM	08/28/26
CHECKED	BS	08/28/26
APPROVED	JWF	08/28/26

FLOOR PLAN AREA 'H' 2ND - ELECTRICAL DEMOLITION

COPYRIGHT © 2025 INTEGRATED DESIGNS INC.

E1.9

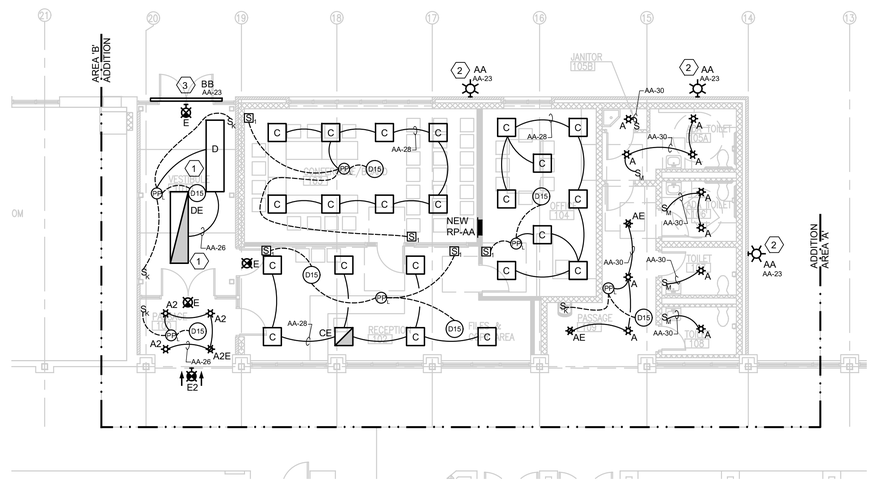

FIRST FLOOR PLAN 'ADDITION' - LIGHTING
1/8" = 1'-0"

KEYED NOTES

1. ELECTRICAL CONTRACTOR SHALL FURNISH AND INSTALL WAVE FIXTURE IN THE NEW ADMINISTRATIVE ADDITION VESTIBULE. THE DESIGN INTENT IS TO HAVE THE BOTTOM OF THE FIXTURES AT 10 FEET ABOVE FINISHED FLOOR.
2. FURNISH AND INSTALL NEW EXTERIOR WALL PACK. THE DESIGN INTENT IS TO MATCH THE EXISTING EXTERIOR LIGHTING MOUNTING HEIGHTS ON THE EXISTING ADMINISTRATIVE WING OF THE SCHOOL. SPLICE AND EXTEND THE EXISTING LIGHT FIXTURE CONTROL TO THE NEW ADMINISTRATIVE BUILDING ADDITION.
3. FURNISH AND INSTALL NEW RAIL FIXTURE. THE DESIGN INTENT IS TO INSTALL THE FIXTURE CENTERED IN BETWEEN THE ENTRANCE LETTERING AND THE TOP OF THE WINDOW, APPROXIMATELY 9'3" ABOVE THE FINISHED SIDEWALK. COORDINATE WITH ARCHITECT PRIOR TO INSTALLATION.

GENERAL NOTES - LIGHTING

1. ALL LIGHTING CONTROL STATIONS LOCATED SHALL BE WHITE DEVICES WITH STAINLESS STEEL COVER PLATES.
2. ELECTRICAL CONTRACTOR SHALL FURNISH AND INSTALL STAINLESS STEEL DECORA STYLE COVER PLATE.
3. ELECTRICAL CONTRACTOR SHALL NOT CORE THROUGH STRUCTURAL MEMBERS.
4. ELECTRICAL CONTRACTOR SHALL USE EXISTING CABLE TRAY WHEN POSSIBLE. FURNISH AND INSTALL NEW J-HOOKS AND SUPPORTS FOR ANY EXISTING CONDUITS AND LOW VOLTAGE CABLING LOCATE ABOVE THE CEILING.
5. ELECTRICAL CONTRACTOR SHALL FURNISH AND INSTALL ALL CONDUIT, BOXES, LINE VOLTAGE WIRING, LINE VOLTAGE CONNECTIONS, SUPPORTS AS REQUIRED.
6. PROVIDE CUSTOM COVERPLATE AS REQUIRED TO COORDINATE EXISTING ROUGH-IN WITH NEW SWITCH STATION QUANTITY CONFIGURATION.

LIGHTING WIRING METHODS

1. EXIT LIGHTS SHALL OPERATE 24-7 AND ARE EQUIPPED WITH A BATTERY RATED FOR 90 MINUTES, WIRE THE EXIT LIGHT TO THE LOCAL LIGHTING CIRCUIT AHEAD OF ANY SWITCHING.
2. HALF-TONE SHADED FIXTURES REPRESENTS THE FIXTURE IS AN EMERGENCY LIGHT AND EQUIPPED WITH AN EMERGENCY BATTERY.
3. CONFIRM LIGHT FIXTURE LAYOUT WITH THE ARCHITECTURAL REFLECTED CEILING PLAN AND ARCHITECTURAL DETAILS FOR LOCATION AND MOUNTING DETAILS.
4. MC CABLE IS ONLY ACCEPTABLE AS A FINAL WIRING CONNECTION TO RECESSED LIGHTING INSTALLED IN ACCESSIBLE CEILINGS. MC CABLE LENGTH SHALL NOT EXCEED 6'-0".
5. PROVIDE AN EQUIPMENT GROUNDING CONDUCTOR FOR LIGHTING CIRCUITS. THE USE OF THE RACEWAY FOR A GROUNDING PATH IS NOT ACCEPTABLE FOR THIS PROJECT.
6. SMALL ROOMS SUCH AS STORAGE ROOM, INDIVIDUAL TOILET ROOMS, JANITORS CLOSET, DATA CLOSET AND OFFICES SHALL HAVE WALL SWITCH TYPE OCCUPANCY SENSORS SWITCHES TO AUTOMATICALLY CONTROL THE LIGHTS AS NOTED AND SPECIFIED ON THE DRAWINGS.
7. OCCUPANCY SENSORS, POWER PACKS AND CONTROLS ARE SHOWN DIAGRAMMATICALLY. INFRARED SENSORS MUST REMAIN AT A MINIMUM OF 4'-0" AWAY FROM ANY MECHANICAL HEAT DIFFUSER TO ELIMINATE FALSE TRIPS. CIRCUIT LINES ARE SHOWN FROM SWITCHES TO LIGHT FIXTURES TO COMMUNICATE SWITCHING CONFIGURATION ONLY. ALL SENSORS, POWER PACKS AND WIRING MUST BE WIRED PER MANUFACTURER'S WIRING METHOD.
8. A SINGLE POWER PACK CAN HAVE MULTIPLE SWITCHES WIRED TO THE DEVICE PROVIDED THAT THE FIXTURES BEING CONTROLLED BY THESE SWITCHES ARE ON THE SAME CIRCUIT. TWO POWER PACKS ARE REQUIRED IF A SECOND CIRCUIT IS INTRODUCED. REFER TO MANUFACTURER'S WIRING METHODS. POWER PACKS AND OR OCCUPANCY SENSORS SHALL INCLUDE A HVAC RELAY AS SCHEDULED AND NOTED ON THE DRAWINGS FOR THE BUILDING AUTOMATION SYSTEM CONNECTION. BUILDING AUTOMATION WIRING SHALL BE COMPLETED AS PART OF THE TEMPERATURE CONTROL CONTRACTOR'S BID.
9. THE ELECTRICAL CONTRACTOR SHALL BE RESPONSIBLE FOR FIRE STOPPING PENETRATIONS THRU FIRE RATED WALLS FOR THEIR WORK.

STATE OF MICHIGAN
August 28, 2026
MAI #2026-01014

KEY PLAN

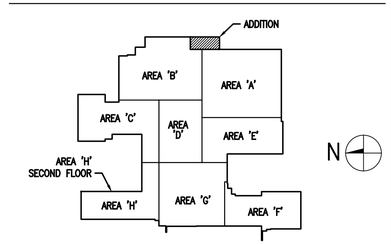

MACMILLAN ASSOCIATES
CONSULTING ENGINEERS
714 EAST MIDLAND STREET • BAY CITY, MICHIGAN 48706
(989) 894-4300 F (989) 894-9930 WWW.MACMILLANASSOCIATES.COM

INTEGRATED DESIGNS INC.
ARCHITECTURE ENGINEERING CONSULTING
MARQUETTE OFFICE:
1021 W. BARGA AVENUE
MARQUETTE, MI 49855
PHONE: (906)228-4660
FAX: (906)228-7524
BRIGHTON OFFICE:
8011 W. GRAND RIVER AVE., SUITE 600
BRIGHTON, MICHIGAN 48116
PHONE: (810)229-2701
FAX: (810)229-4787

HARBOR BEACH PUBLIC SCHOOLS
PHASE 1 - 2026 ADDITION & RENOVATIONS
HARBOR BEACH, MICHIGAN
PROJECT NO. 24-128

NO.	REVISIONS	DATE
0	FOR CONSTRUCTION	08/28/26

	BY	DATE
DESIGN	BS	08/28/26
DRAWN	RLM	08/28/26
CHECKED	BS	08/28/26
APPROVED	JWF	08/28/26

FIRST FLOOR PLAN 'ADDITION' - LIGHTING

COPYRIGHT © 2025 INTEGRATED DESIGNS INC.

E2.1

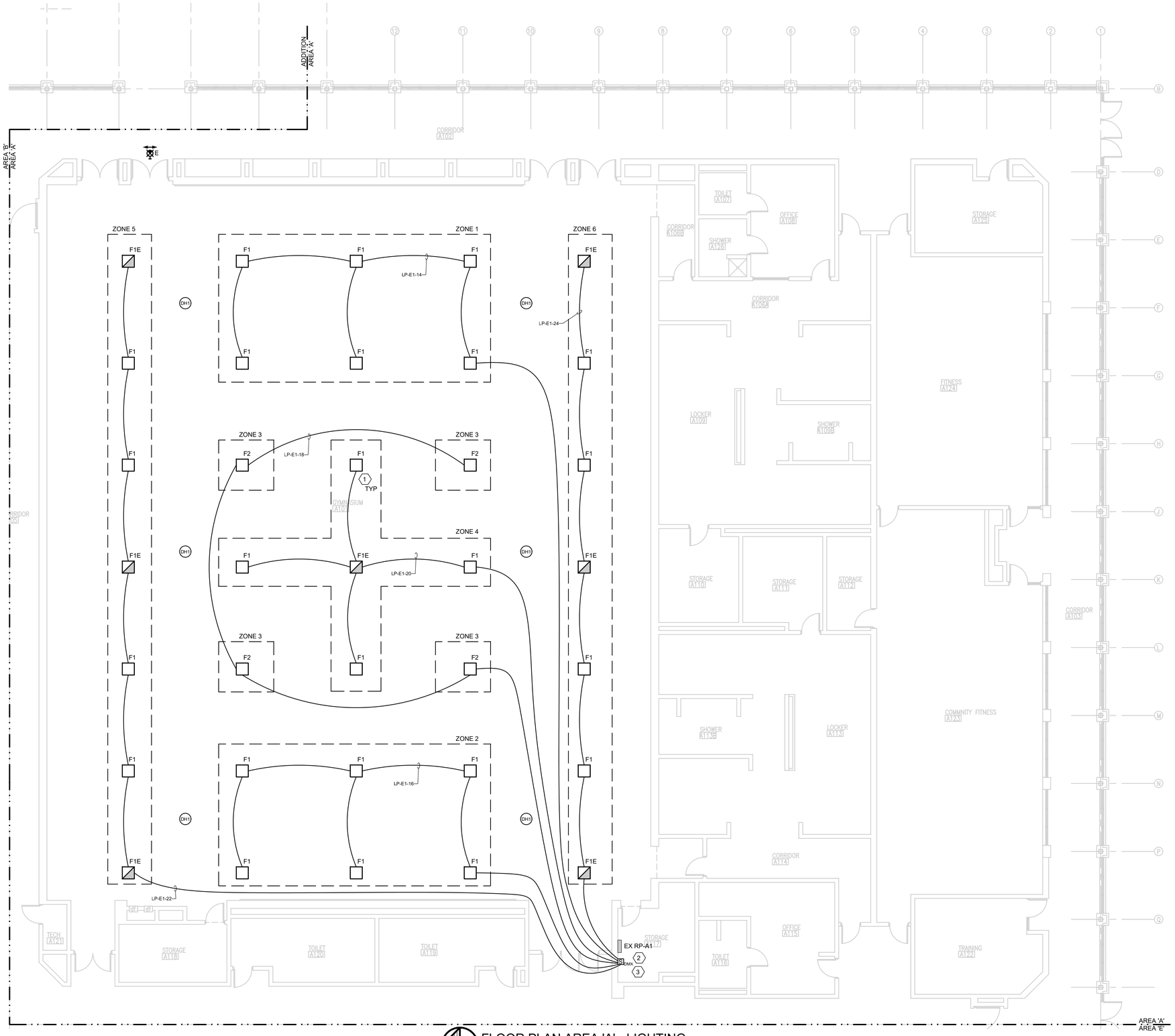

FLOOR PLAN AREA 'A' - LIGHTING

1/8"=1'-0"

GENERAL NOTES - LIGHTING

1. ALL LIGHTING CONTROL STATIONS LOCATED SHALL BE WHITE DEVICES WITH STAINLESS STEEL COVER PLATES.
2. ELECTRICAL CONTRACTOR SHALL FURNISH AND INSTALL STAINLESS STEEL DECORA STYLE COVER PLATE.
3. ELECTRICAL CONTRACTOR SHALL NOT CORE THROUGH STRUCTURAL MEMBERS.
4. ELECTRICAL CONTRACTOR SHALL USE EXISTING CABLE TRAY WHEN POSSIBLE. FURNISH AND INSTALL NEW J-HOOKS AND SUPPORTS FOR ANY EXISTING CONDUITS AND LOW VOLTAGE CABLING LOCATE ABOVE THE CEILING.
5. ELECTRICAL CONTRACTOR SHALL FURNISH AND INSTALL ALL CONDUIT, BOXES, LINE VOLTAGE WIRING, LINE VOLTAGE CONNECTIONS, SUPPORTS AS REQUIRED.
6. PROVIDE CUSTOM COVERPLATE AS REQUIRED TO COORDINATE EXISTING ROUGH-IN WITH NEW SWITCH STATION QUANTITY CONFIGURATION.

LIGHTING WIRING METHODS

1. EXIT LIGHTS SHALL OPERATE 24-7 AND ARE EQUIPPED WITH A BATTERY RATED FOR 90 MINUTES, WIRE THE EXIT LIGHT TO THE LOCAL LIGHTING CIRCUIT AHEAD OF ANY SWITCHING.
2. HALF-TONE SHADED FIXTURES REPRESENTS THE FIXTURE IS AN EMERGENCY LIGHT AND EQUIPPED WITH AN EMERGENCY BATTERY.
3. CONFIRM LIGHT FIXTURE LAYOUT WITH THE ARCHITECTURAL REFLECTED CEILING PLAN AND ARCHITECTURAL DETAILS FOR LOCATION AND MOUNTING DETAILS.
4. MC CABLE IS ONLY ACCEPTABLE AS A FINAL WIRING CONNECTION TO RECESSED LIGHTING INSTALLED IN ACCESSIBLE CEILINGS. MC CABLE LENGTH SHALL NOT EXCEED 6'-0".
5. PROVIDE AN EQUIPMENT GROUNDING CONDUCTOR FOR LIGHTING CIRCUITS. THE USE OF THE RACEWAY FOR A GROUNDING PATH IS NOT ACCEPTABLE FOR THIS PROJECT.
6. SMALL ROOMS SUCH AS STORAGE ROOM, INDIVIDUAL TOILET ROOMS, JANITORS CLOSET, DATA CLOSET AND OFFICES SHALL HAVE WALL SWITCH TYPE OCCUPANCY SENSORS SWITCHES TO AUTOMATICALLY CONTROL THE LIGHTS AS NOTED AND SPECIFIED ON THE DRAWINGS.
7. OCCUPANCY SENSORS, POWER PACKS AND CONTROLS ARE SHOWN DIAGRAMMATICALLY. INFRARED SENSORS MUST REMAIN AT A MINIMUM OF 4'-0" AWAY FROM ANY MECHANICAL HEAT DIFFUSER TO ELIMINATE FALSE TRIPS. CIRCUIT LINES ARE SHOWN FROM SWITCHES TO LIGHT FIXTURES TO COMMUNICATE SWITCHING CONFIGURATION ONLY. ALL SENSORS, POWER PACKS AND WIRING MUST BE WIRED PER MANUFACTURER'S WIRING METHOD.
8. A SINGLE POWER PACK CAN HAVE MULTIPLE SWITCHES WIRED TO THE DEVICE PROVIDED THAT THE FIXTURES BEING CONTROLLED BY THESE SWITCHES ARE ON THE SAME CIRCUIT. TWO POWER PACKS ARE REQUIRED IF A SECOND CIRCUIT IS INTRODUCED. REFER TO MANUFACTURER'S WIRING METHODS. POWER PACKS AND OR OCCUPANCY SENSORS SHALL INCLUDE A HVAC RELAY AS SCHEDULED AND NOTED ON THE DRAWINGS FOR THE BUILDING AUTOMATION SYSTEM CONNECTION. BUILDING AUTOMATION WIRING SHALL BE COMPLETED AS PART OF THE TEMPERATURE CONTROL CONTRACTOR'S BID.
9. THE ELECTRICAL CONTRACTOR SHALL BE RESPONSIBLE FOR FIRE STOPPING PENETRATIONS THRU FIRE RATED WALLS FOR THEIR WORK.

KEYED NOTES

1. THE DESIGN INTENT IS TO INSTALL THE LIGHT FIXTURES EVEN WITH THE BOTTOM OF THE STEEL. PROVIDE UNISTRUT CROSS SUPPORTS AS NEEDED. PAINT UNISTRUT TO MATCH THE STEEL.
2. THE DESIGN INTENT IS TO REUSE THE HOMERUN BACK TO PANEL LP-E1C FOR THE NEW ZONE LIGHTING IN THE GYM. FURNISH AND INSTALL ALL NEW CONDUIT AND WIRING FROM THE NEW DMX CONTROLLER TO THE NEW HIGH BAY FIXTURES. PAINT CONDUIT TO MATCH.
3. NEW DMX CONTROLLER. REFER TO DMX CONTROLLER WIRING DIAGRAM FOR INSTALLATION AND PROGRAMMING INSTRUCTIONS.

STATE OF MICHIGAN
August 28, 2026
MAI #2026-01014

KEY PLAN

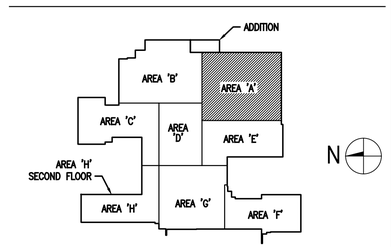

MACMILLAN ASSOCIATES
CONSULTING ENGINEERS
714 EAST MIDLAND STREET • BAY CITY, MICHIGAN 48706
(989) 894-4300 F (989) 894-9930 WWW.MACMILLANASSOCIATES.COM

MARQUETTE OFFICE:
1021 W. BARAGA AVENUE
MARQUETTE, MI 49855
PHONE: (906)228-4660
FAX: (906)228-7524
BRIGHTON OFFICE:
8011 W. GRAND RIVER AVE., SUITE 600
BRIGHTON, MI 48116
PHONE: (810)229-2701
FAX: (810)229-4787
INTEGRATED DESIGNS INC.
ARCHITECTURE
ENGINEERING
CONSULTING

HARBOR BEACH PUBLIC SCHOOLS
PHASE 1 - 2026 ADDITION & RENOVATIONS
HARBOR BEACH, MICHIGAN
PROJECT NO. 24-128

	BY	DATE
DESIGN	BS	08/28/26
DRAWN	RLM	08/28/26
CHECKED	BS	08/28/26
APPROVED	JWF	08/28/26

NO.	REVISIONS	DATE
0	FOR CONSTRUCTION	08/28/26

FLOOR PLAN AREA 'A' - LIGHTING

COPYRIGHT © 2025 INTEGRATED DESIGNS INC.

E2.2

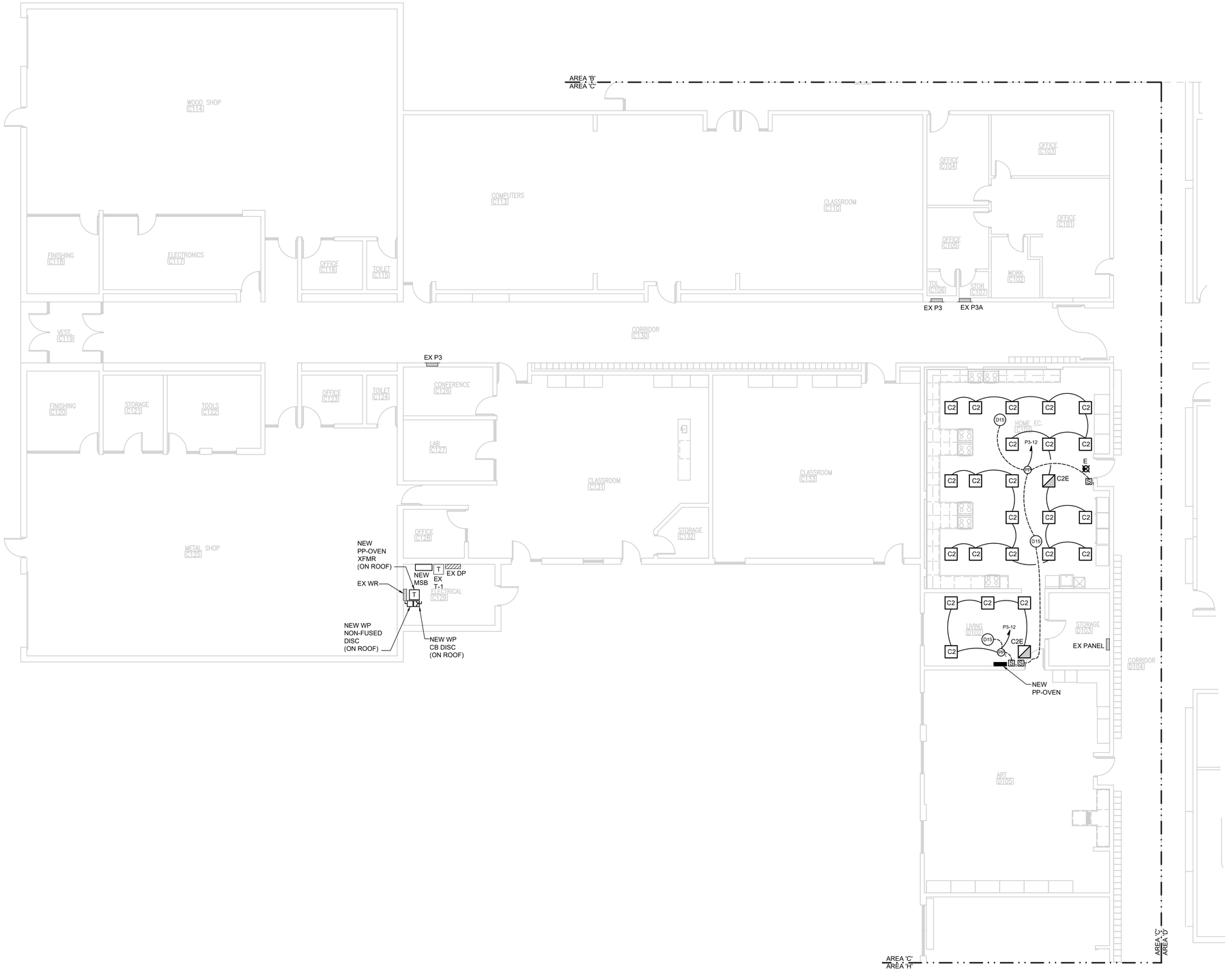

FLOOR PLAN AREA 'C' - LIGHTING

1/8"=1'-0"

GENERAL NOTES - LIGHTING

1. ALL LIGHTING CONTROL STATIONS LOCATED SHALL BE WHITE DEVICES WITH STAINLESS STEEL COVER PLATES.
2. ELECTRICAL CONTRACTOR SHALL FURNISH AND INSTALL STAINLESS STEEL DECORA STYLE COVER PLATE.
3. ELECTRICAL CONTRACTOR SHALL NOT CORE THROUGH STRUCTURAL MEMBERS.
4. ELECTRICAL CONTRACTOR SHALL USE EXISTING CABLE TRAY WHEN POSSIBLE. FURNISH AND INSTALL NEW J-HOOKS AND SUPPORTS FOR ANY EXISTING CONDUITS AND LOW VOLTAGE CABLING LOCATE ABOVE THE CEILING.
5. ELECTRICAL CONTRACTOR SHALL FURNISH AND INSTALL ALL CONDUIT, BOXES, LINE VOLTAGE WIRING, LINE VOLTAGE CONNECTIONS, SUPPORTS AS REQUIRED.
6. PROVIDE CUSTOM COVERPLATE AS REQUIRED TO COORDINATE EXISTING ROUGH-IN WITH NEW SWITCH STATION QUANTITY CONFIGURATION.

LIGHTING WIRING METHODS

1. EXIT LIGHTS SHALL OPERATE 24-7 AND ARE EQUIPPED WITH A BATTERY RATED FOR 90 MINUTES. WIRE THE EXIT LIGHT TO THE LOCAL LIGHTING CIRCUIT AHEAD OF ANY SWITCHING.
2. HALF-TONE SHADED FIXTURES REPRESENTS THE FIXTURE IS AN EMERGENCY LIGHT AND EQUIPPED WITH AN EMERGENCY BATTERY.
3. CONFIRM LIGHT FIXTURE LAYOUT WITH THE ARCHITECTURAL REFLECTED CEILING PLAN AND ARCHITECTURAL DETAILS FOR LOCATION AND MOUNTING DETAILS.
4. MC CABLE IS ONLY ACCEPTABLE AS A FINAL WIRING CONNECTION TO RECESSED LIGHTING INSTALLED IN ACCESSIBLE CEILINGS. MC CABLE LENGTH SHALL NOT EXCEED 6'-0".
5. PROVIDE AN EQUIPMENT GROUNDING CONDUCTOR FOR LIGHTING CIRCUITS. THE USE OF THE RACEWAY FOR A GROUNDING PATH IS NOT ACCEPTABLE FOR THIS PROJECT.
6. SMALL ROOMS SUCH AS STORAGE ROOM, INDIVIDUAL TOILET ROOMS, JANITORS CLOSET, DATA CLOSET AND OFFICES SHALL HAVE WALL SWITCH TYPE OCCUPANCY SENSORS SWITCHES TO AUTOMATICALLY CONTROL THE LIGHTS AS NOTED AND SPECIFIED ON THE DRAWINGS.
7. OCCUPANCY SENSORS, POWER PACKS AND CONTROLS ARE SHOWN DIAGRAMMATICALLY. INFRARED SENSORS MUST REMAIN AT A MINIMUM OF 4'-0" AWAY FROM ANY MECHANICAL HEAT DIFFUSER TO ELIMINATE FALSE TRIPS. CIRCUIT LINES ARE SHOWN FROM SWITCHES TO LIGHT FIXTURES TO COMMUNICATE SWITCHING CONFIGURATION ONLY. ALL SENSORS, POWER PACKS AND WIRING MUST BE WIRED PER MANUFACTURER'S WIRING METHOD.
8. A SINGLE POWER PACK CAN HAVE MULTIPLE SWITCHES WIRED TO THE DEVICE PROVIDED THAT THE FIXTURES BEING CONTROLLED BY THESE SWITCHES ARE ON THE SAME CIRCUIT. TWO POWER PACKS ARE REQUIRED IF A SECOND CIRCUIT IS INTRODUCED. REFER TO MANUFACTURER'S WIRING METHODS. POWER PACKS AND OR OCCUPANCY SENSORS SHALL INCLUDE A HVAC RELAY AS SCHEDULED AND NOTED ON THE DRAWINGS FOR THE BUILDING AUTOMATION SYSTEM CONNECTION. BUILDING AUTOMATION WIRING SHALL BE COMPLETED AS PART OF THE TEMPERATURE CONTROL CONTRACTOR'S BID.
9. THE ELECTRICAL CONTRACTOR SHALL BE RESPONSIBLE FOR FIRE STOPPING PENETRATIONS THRU FIRE RATED WALLS FOR THEIR WORK.

STATE OF MICHIGAN
August 28, 2026
MAI #2026-01014

KEY PLAN

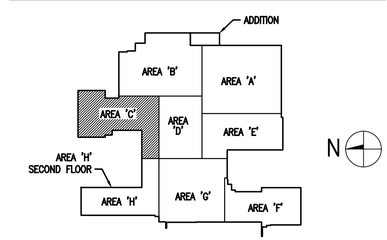

MACMILLAN ASSOCIATES
CONSULTING ENGINEERS
714 EAST MIDLAND STREET • BAY CITY, MICHIGAN 48706
(989) 894-4300 F (989) 894-9930 WWW.MACMILLANASSOCIATES.COM

MARQUETTE OFFICE:
1021 W. BARGA AVENUE
MARQUETTE, MI 49855
PHONE: (906)228-4660
FAX: (906)228-7524
BRIGHTON OFFICE:
8011 W. GRAND RIVER AVE., SUITE 600
BRIGHTON, MI 48116
PHONE: (810)229-2701
FAX: (810)229-4787

ARCHITECTURE ENGINEERING CONSULTING
INTEGRATED DESIGNS INC.

HARBOR BEACH PUBLIC SCHOOLS
PHASE 1 - 2026 ADDITION & RENOVATIONS
HARBOR BEACH, MICHIGAN
PROJECT NO. 24-128

NO.	REVISIONS	DATE
0	FOR CONSTRUCTION	08/28/26

	BY	DATE
DESIGN	BS	08/28/26
DRAWN	RLM	08/28/26
CHECKED	BS	08/28/26
APPROVED	JWF	08/28/26

FLOOR PLAN AREA 'C' - LIGHTING

COPYRIGHT © 2025 INTEGRATED DESIGNS INC.

E2.3

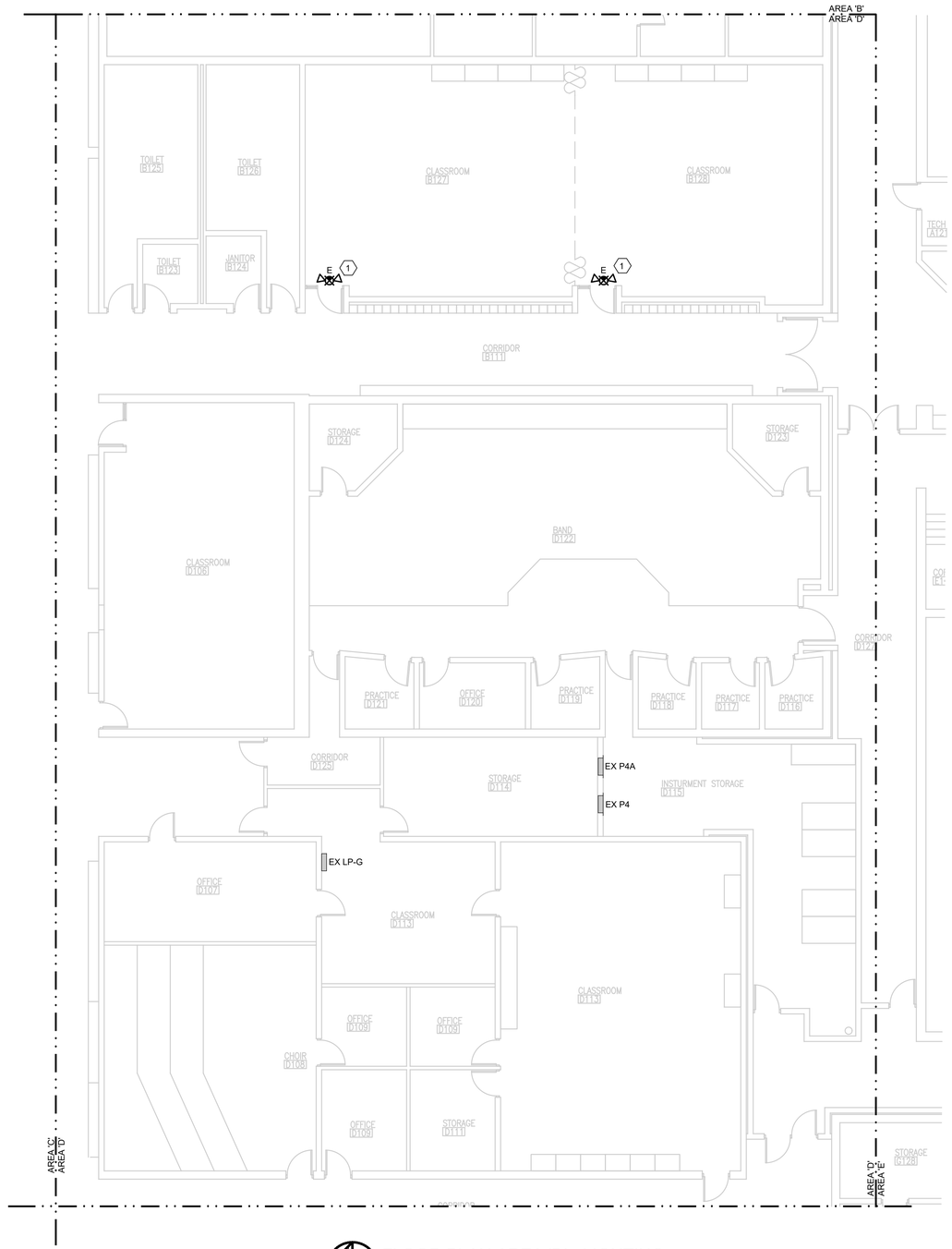

FLOOR PLAN AREA 'D' - LIGHTING

1/8"=1'-0"

KEYED NOTES

1. FURNISH AND INSTALL NEW EXIT SIGNAGE WITH EMERGENCY LIGHTING IN THE EXISTING CLASSROOMS. CONNECT TO LOCAL LIGHTING CIRCUIT AHEAD OF ALL CONTROLS.

GENERAL NOTES - LIGHTING

1. ALL LIGHTING CONTROL STATIONS LOCATED SHALL BE WHITE DEVICES WITH STAINLESS STEEL COVER PLATES.
2. ELECTRICAL CONTRACTOR SHALL FURNISH AND INSTALL STAINLESS STEEL DECORA STYLE COVER PLATE.
3. ELECTRICAL CONTRACTOR SHALL NOT CORE THROUGH STRUCTURAL MEMBERS.
4. ELECTRICAL CONTRACTOR SHALL USE EXISTING CABLE TRAY WHEN POSSIBLE. FURNISH AND INSTALL NEW J-HOOKS AND SUPPORTS FOR ANY EXISTING CONDUITS AND LOW VOLTAGE CABLING LOCATE ABOVE THE CEILING.
5. ELECTRICAL CONTRACTOR SHALL FURNISH AND INSTALL ALL CONDUIT, BOXES, LINE VOLTAGE WIRING, LINE VOLTAGE CONNECTIONS, SUPPORTS AS REQUIRED.
6. PROVIDE CUSTOM COVERPLATE AS REQUIRED TO COORDINATE EXISTING ROUGH-IN WITH NEW SWITCH STATION QUANTITY CONFIGURATION.

LIGHTING WIRING METHODS

1. EXIT LIGHTS SHALL OPERATE 24-7 AND ARE EQUIPPED WITH A BATTERY RATED FOR 90 MINUTES. WIRE THE EXIT LIGHT TO THE LOCAL LIGHTING CIRCUIT AHEAD OF ANY SWITCHING.
2. HALF-TONE SHADED FIXTURES REPRESENTS THE FIXTURE IS AN EMERGENCY LIGHT AND EQUIPPED WITH AN EMERGENCY BATTERY.
3. CONFIRM LIGHT FIXTURE LAYOUT WITH THE ARCHITECTURAL REFLECTED CEILING PLAN AND ARCHITECTURAL DETAILS FOR LOCATION AND MOUNTING DETAILS.
4. MC CABLE IS ONLY ACCEPTABLE AS A FINAL WIRING CONNECTION TO RECESSED LIGHTING INSTALLED IN ACCESSIBLE CEILINGS. MC CABLE LENGTH SHALL NOT EXCEED 6'-0".
5. PROVIDE AN EQUIPMENT GROUNDING CONDUCTOR FOR LIGHTING CIRCUITS. THE USE OF THE RACEWAY FOR A GROUNDING PATH IS NOT ACCEPTABLE FOR THIS PROJECT.
6. SMALL ROOMS SUCH AS STORAGE ROOM, INDIVIDUAL TOILET ROOMS, JANITORS CLOSET, DATA CLOSET AND OFFICES SHALL HAVE WALL SWITCH TYPE OCCUPANCY SENSORS SWITCHES TO AUTOMATICALLY CONTROL THE LIGHTS AS NOTED AND SPECIFIED ON THE DRAWINGS.
7. OCCUPANCY SENSORS, POWER PACKS AND CONTROLS ARE SHOWN DIAGRAMMATICALLY. INFRARED SENSORS MUST REMAIN AT A MINIMUM OF 4'-0" AWAY FROM ANY MECHANICAL HEAT DIFFUSER TO ELIMINATE FALSE TRIPS. CIRCUIT LINES ARE SHOWN FROM SWITCHES TO LIGHT FIXTURES TO COMMUNICATE SWITCHING CONFIGURATION ONLY. ALL SENSORS, POWER PACKS AND WIRING MUST BE WIRED PER MANUFACTURER'S WIRING METHOD.
8. A SINGLE POWER PACK CAN HAVE MULTIPLE SWITCHES WIRED TO THE DEVICE PROVIDED THAT THE FIXTURES BEING CONTROLLED BY THESE SWITCHES ARE ON THE SAME CIRCUIT. TWO POWER PACKS ARE REQUIRED IF A SECOND CIRCUIT IS INTRODUCED. REFER TO MANUFACTURER'S WIRING METHODS. POWER PACKS AND OR OCCUPANCY SENSORS SHALL INCLUDE A HVAC RELAY AS SCHEDULED AND NOTED ON THE DRAWINGS FOR THE BUILDING AUTOMATION SYSTEM CONNECTION. BUILDING AUTOMATION WIRING SHALL BE COMPLETED AS PART OF THE TEMPERATURE CONTROL CONTRACTOR'S BID.
9. THE ELECTRICAL CONTRACTOR SHALL BE RESPONSIBLE FOR FIRE STOPPING PENETRATIONS THRU FIRE RATED WALLS FOR THEIR WORK.

STATE OF MICHIGAN
August 28, 2026
MAI #2026-01014

KEY PLAN

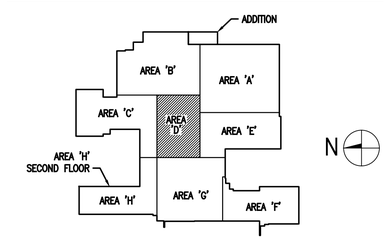

MACMILLAN ASSOCIATES
CONSULTING ENGINEERS
714 EAST MIDLAND STREET • BAY CITY, MICHIGAN 48706
(989) 894-4300 F (989) 894-9930 WWW.MACMILLANASSOCIATES.COM

MARQUETTE OFFICE:
1021 W. BARAGA AVENUE
MARQUETTE, MI 49855
PHONE: (906)228-4660
FAX: (906)228-7524
BRIGHTON OFFICE:
8011 W. GRAND RIVER AVE., SUITE 600
BRIGHTON, MI 48116
PHONE: (810)229-2701
FAX: (810)229-6787

ARCHITECTURE
ENGINEERING
CONSULTING
INTEGRATED DESIGNS INC.

HARBOR BEACH PUBLIC SCHOOLS
PHASE 1 - 2026 ADDITION & RENOVATIONS
HARBOR BEACH, MICHIGAN
PROJECT NO. 24-128

NO.	REVISIONS	DATE
0	FOR CONSTRUCTION	08/28/26

	BY	DATE
DESIGN	BS	08/28/26
DRAWN	RLM	08/28/26
CHECKED	BS	08/28/26
APPROVED	JWF	08/28/26

FLOOR PLAN AREA 'D' - LIGHTING

COPYRIGHT © 2025 INTEGRATED DESIGNS, INC.

E2.4

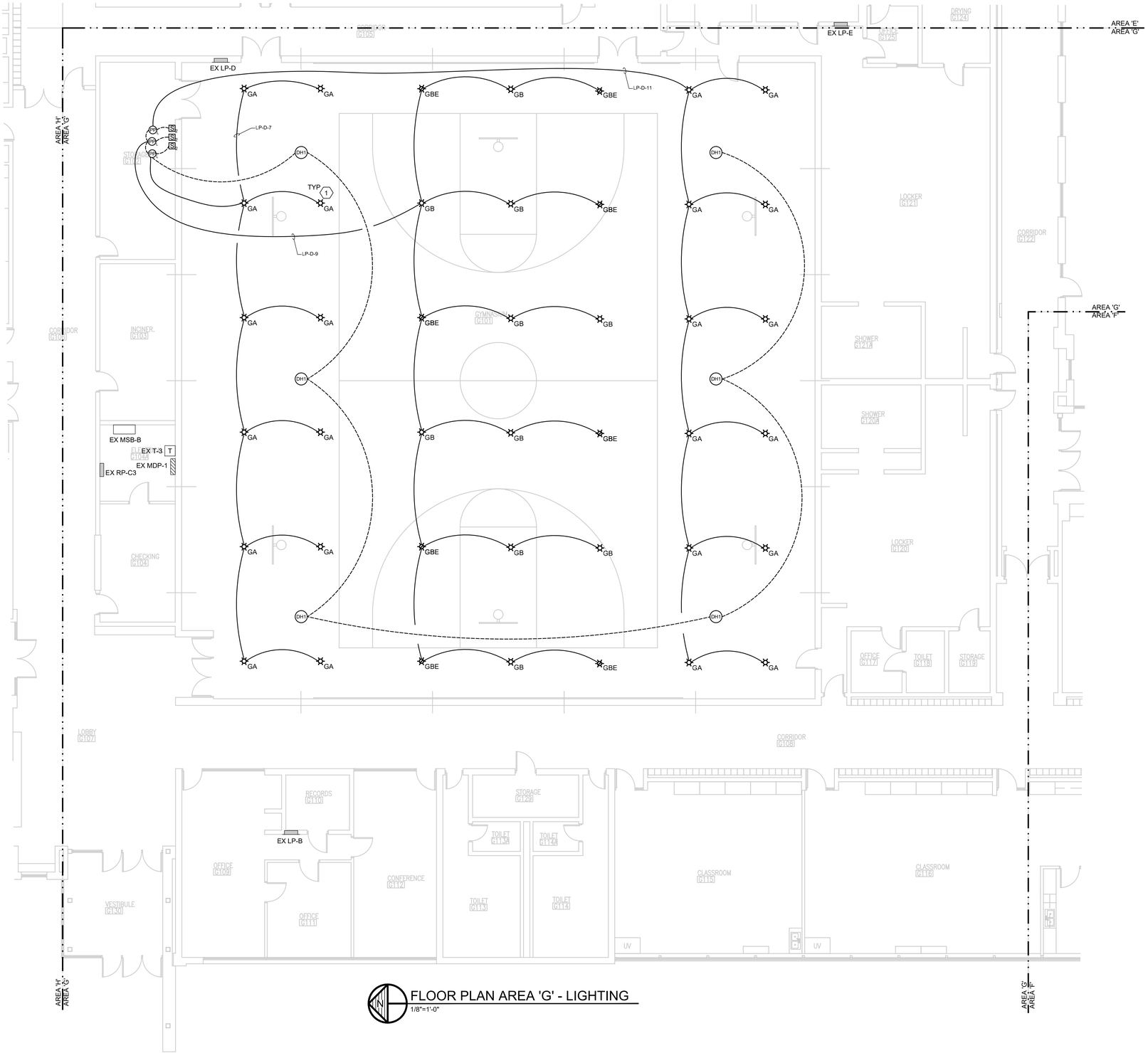

FLOOR PLAN AREA 'G' - LIGHTING
1/8"=1'-0"

GENERAL NOTES - LIGHTING

1. ALL LIGHTING CONTROL STATIONS LOCATED SHALL BE WHITE DEVICES WITH STAINLESS STEEL COVER PLATES.
2. ELECTRICAL CONTRACTOR SHALL FURNISH AND INSTALL STAINLESS STEEL DECORA STYLE COVER PLATE.
3. ELECTRICAL CONTRACTOR SHALL NOT CORE THROUGH STRUCTURAL MEMBERS.
4. ELECTRICAL CONTRACTOR SHALL FURNISH AND INSTALL ALL CONDUIT, BOXES, LINE VOLTAGE WIRING, LINE VOLTAGE CONNECTIONS, SUPPORTS AS REQUIRED.
5. THE DESIGN INTENT RESUSE THE EXISTING NEWER STYLE LED FIXTURES IN THE EXISTING K-8 AND HIGH SCHOOL GYMS. INSTALL THE EXISTING LED FIXTURES IN NEW LOCATIONS SHOWN.
6. PROVIDE CUSTOM COVERPLATE AS REQUIRED TO COORDINATE EXISTING ROUGH-IN WITH NEW SWITCH STATION QUANTITY CONFIGURATION.

LIGHTING WIRING METHODS

1. EXIT LIGHTS SHALL OPERATE 24-7 AND ARE EQUIPPED WITH A BATTERY RATED FOR 90 MINUTES. WIRE THE EXIT LIGHT TO THE LOCAL LIGHTING CIRCUIT AHEAD OF ANY SWITCHING.
2. HALF-TONE SHADED FIXTURES REPRESENTS THE FIXTURE IS AN EMERGENCY LIGHT AND EQUIPPED WITH AN EMERGENCY BATTERY.
3. CONFIRM LIGHT FIXTURE LAYOUT WITH THE ARCHITECTURAL REFLECTED CEILING PLAN AND ARCHITECTURAL DETAILS FOR LOCATION AND MOUNTING DETAILS.
4. MC CABLE IS ONLY ACCEPTABLE AS A FINAL WIRING CONNECTION TO RECESSED LIGHTING INSTALLED IN ACCESSIBLE CEILINGS. MC CABLE LENGTH SHALL NOT EXCEED 6'-0".
5. PROVIDE AN EQUIPMENT GROUNDING CONDUCTOR FOR LIGHTING CIRCUITS. THE USE OF THE RACEWAY FOR A GROUNDING PATH IS NOT ACCEPTABLE FOR THIS PROJECT.
6. SMALL ROOMS SUCH AS STORAGE ROOM, INDIVIDUAL TOILET ROOMS, JANITORS CLOSET, DATA CLOSET AND OFFICES SHALL HAVE WALL SWITCH TYPE OCCUPANCY SENSORS SWITCHES TO AUTOMATICALLY CONTROL THE LIGHTS AS NOTED AND SPECIFIED ON THE DRAWINGS.
7. OCCUPANCY SENSORS, POWER PACKS AND CONTROLS ARE SHOWN DIAGRAMMATICALLY. INFRARED SENSORS MUST REMAIN AT A MINIMUM OF 4'-0" AWAY FROM ANY MECHANICAL HEAT DIFFUSER TO ELIMINATE FALSE TRIPS. CIRCUIT LINES ARE SHOWN FROM SWITCHES TO LIGHT FIXTURES TO COMMUNICATE SWITCHING CONFIGURATION ONLY. ALL SENSORS, POWER PACKS AND WIRING MUST BE WIRED PER MANUFACTURER'S WIRING METHOD.
8. A SINGLE POWER PACK CAN HAVE MULTIPLE SWITCHES WIRED TO THE DEVICE PROVIDED THAT THE FIXTURES BEING CONTROLLED BY THESE SWITCHES ARE ON THE SAME CIRCUIT. TWO POWER PACKS ARE REQUIRED IF A SECOND CIRCUIT IS INTRODUCED. REFER TO MANUFACTURER'S WIRING METHODS. POWER PACKS AND OR OCCUPANCY SENSORS SHALL INCLUDE A HVAC RELAY AS SCHEDULED AND NOTED ON THE DRAWINGS FOR THE BUILDING AUTOMATION SYSTEM CONNECTION. BUILDING AUTOMATION WIRING SHALL BE COMPLETED AS PART OF THE TEMPERATURE CONTROL CONTRACTOR'S BID.
9. THE ELECTRICAL CONTRACTOR SHALL BE RESPONSIBLE FOR FIRE STOPPING PENETRATIONS THRU FIRE RATED WALLS FOR THEIR WORK.

KEYED NOTES

1. EXISTING HIGH BAY FIXTURES THAT ARE TO BE REUTILIZED IN THE EXISTING K-8 GYM. FURNISH AND INSTALL ALL REQUIRED MOUNTING UNISTRUT AND SUPPORTS FOR INSTALLATION IN THE NEW CEILING. FIXTURES SHALL BE FLUSH WITH THE BOTTOM OF STEEL. FIELD LOCATE ALL INSTALLATION LOCATIONS PRIOR TO INSTALLATION.

STATE OF MICHIGAN
JAMES W. FIFE
No. 6201047102
LICENSED PROFESSIONAL ENGINEER

August 28, 2026
MAI #2026-01014

KEY PLAN

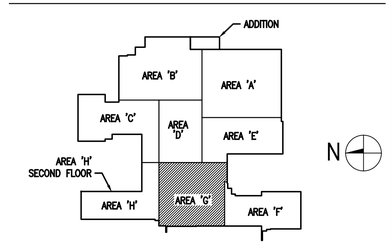

MACMILLAN ASSOCIATES
CONSULTING ENGINEERS
714 EAST MIDLAND STREET • BAY CITY, MICHIGAN 48706
(989) 894-4300 F (989) 894-9930 WWW.MACMILLANASSOCIATES.COM

MARQUETTE OFFICE:
1021 W. BARGA AVENUE
MARQUETTE, MI 49855
PHONE: (906)228-4660
FAX: (906)228-7524
BRIGHTON OFFICE:
8011 W. GRAND RIVER AVE., SUITE 600
BRIGHTON, MI 48116
PHONE: (810)229-2701
FAX: (810)229-8787

ARCHITECTURE ENGINEERING CONSULTING
INTEGRATED DESIGNS INC.

HARBOR BEACH PUBLIC SCHOOLS
PHASE 1 - 2026 ADDITION & RENOVATIONS
HARBOR BEACH, MICHIGAN
PROJECT NO. 24-128

	BY	DATE
DESIGN	BS	08/28/26
DRAWN	RLM	08/28/26
CHECKED	BS	08/28/26
APPROVED	JWF	08/28/26

NO.	REVISIONS	DATE
0	FOR CONSTRUCTION	08/28/26

FLOOR PLAN AREA 'G' - LIGHTING

COPYRIGHT © 2025 INTEGRATED DESIGNS INC.

E2.5

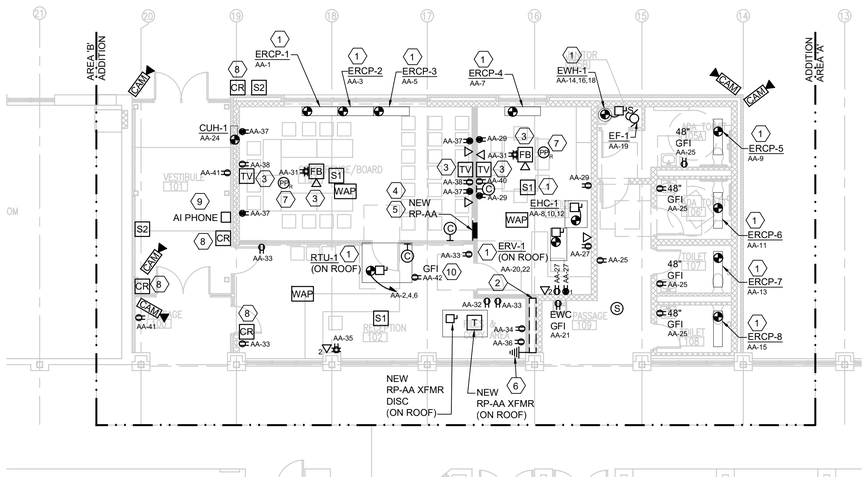

FIRST FLOOR PLAN ADDITION - POWER AND SYSTEMS
1/8" = 1'-0"

KEYED NOTES

1. LECTRICAL CONTRACTOR SHALL FURNISH AND INSTALL NEW LOCKABLE TOGGLE DISCONNECT, FEED AND WIRING TO NEW MECHANICAL RADIANT CEILING PANEL. FURNISH AND INSTALL CONDUIT AND FEED TO MECHANICALLY FURNISHED AND LOCATED LINE VOLTAGE THERMOSTAT. PROVIDE ROUGH-IN LOCATION BASED ON MECHANICAL DRAWINGS FOR LINE VOLTAGE THERMOSTAT. WIRE PER MANUFACTURERS SPECIFICATIONS. ELECTRICAL CONTRACTOR IS RESPONSIBLE FOR THE MOUNTING AND INSTALLATION OF DISCONNECTS AND ALL FINAL WIRING TERMINATIONS.
2. WALL CHASE. ROUTE ALL NEW CONDUITS FROM THE EXISTING BUILDING INTO THIS CHASE. REFER TO SHEET E0.2 FOR NUMBER OF CONDUITS AND SIZING.
3. FURNISH AND INSTALL NEW FLOOR BOX WITH QUAD RECEPTACLE AND (2) 1-1/4" CONDUITS FROM THE FLOOR BOX TO THE (2) TV LOCATIONS FOR HDMI CABLE. FURNISH AND INSTALL HDMI CABLE AND FACEPLATES. COORDINATE FINAL LOCATION OF FLOOR BOX WITH ARCHITECT, OWNER, AND FURNITURE PRIOR TO INSTALLATION.
4. FURNISH AND INSTALL NEW TRANSFORMER AND NEW RP-AA TRANSFORMER DISCONNECT FOR ADDITION ON NEW ADDITION ROOF. TRANSFORMER AND DISCONNECT SHALL BE NEMA 3R RATED. REFER TO ONE-LINE DIAGRAM FOR SELECTION. REFER TO STRUCTURAL DRAWINGS FOR CURBB DETAIL. REFER TO DETAILS SHEET FOR CURB PENETRATION DETAIL AND UNISTRUT RACK MOUNTING DETAIL.
5. FURNISH AND INSTALL NEW PANELBOARD FOR ADMINISTRATIVE ADDITION IN CONFERENCE ROOM WALL.
6. FURNISH AND INSTALL A #3/0 COPPER GROUNDING CONDUCTOR FROM NEW REBAR AND FROM NEW STEEL STRUCTURE ROUTED BACK TO THE EXISTING MAIN ELECTRICAL DISTRIBUTION PANEL MAIN GROUND BAR.
7. FURNISH AND INSTALL NEW RECEPTACLE POWER PACK FOR OCCUPANCY CONTROLLED RECEPTACLES. THE DESIGN INTENT IS FOR THE POWER PACK TO BE TIED IN WITH THE ROOM OCCUPANCY SENSORS.
8. FURNISH AND INSTALL NEW CARD READER. REFER TO DOOR HARDWARE FOR FINAL INSTALLATION LOCATION. REFER TO CARD READER DETAIL FOR INSTALLATION INSTRUCTIONS.
9. NEW AI PHONE SECURITY CAMERA AND MICROPHONE. ROUTE BACK TO THE MAIN RECEPTION DESK FOR CONTROL. ELECTRICAL CONTRACTOR IS RESPONSIBLE FOR ALL RACEWAYS AND TERMINATIONS FOR THE SYSTEM.
10. FURNISH AND INSTALL NEW 120V CIRCUIT FOR NEW ROOFTOP WEATHERPROOF SERVICE RECEPTACLE WITH METALLIC IN-USE COVERPLATE FROM PANEL RP-AA AHEAD OF ANY SWITCHING.

GENERAL NOTES

1. ALL RECEPTACLES LOCATED SHALL BE WHITE DEVICES WITH STAINLESS STEEL COVERPLATES.
2. ELECTRICAL CONTRACTOR SHALL NOT CORE THROUGH STRUCTURAL MEMBERS.
3. ELECTRICAL CONTRACTOR MAY REUSE EXISTING CIRCUITS WHEN POSSIBLE OTHERWISE PROVIDE NEW.
4. ELECTRICAL CONTRACTOR SHALL FURNISH AND INSTALL NEW J-HOOKS AND SUPPORTS FOR ANY EXISTING CONDUITS AND LOW VOLTAGE CABLING LOCATED ABOVE THE CEILING.
5. ELECTRICAL CONTRACTOR SHALL FURNISH AND INSTALL ALL CONDUIT, BOXES, LINE VOLTAGE WIRING, LINE VOLTAGE CONNECTIONS, RECEPTACLES, SUPPORTS AS REQUIRED FOR A/V INSTALLATION.
6. ALL RECEPTACLES SHALL BE TAMPER RESISTANT.

POWER & SYSTEMS WIRING METHODS

1. PROVIDE A DEDICATED NEUTRAL CONDUCTOR FOR EACH RECEPTACLE CIRCUIT. SHARED NEUTRALS ARE NOT PERMITTED.
2. PROVIDE EQUIPMENT GROUNDING CONDUCTOR FOR EACH RECEPTACLE. PROVIDE A #12 MINIMUM GROUNDING CONDUCTOR IN EACH RACEWAY. THE USE OF METAL CONDUIT OR RACEWAY FOR A BOND PATH IS NOT ACCEPTABLE FOR THIS PROJECT. PROVIDE ISOLATED GROUND CONDUCTOR FOR THE A/V CIRCUITS AS NOTED AND SPECIFIED.
3. ALL POWER WIRING SHALL BE INSTALLED IN CONDUIT.
4. ALL NEW RECEPTACLES AND VOICE/DATA OUTLETS SHALL BE MOUNTED AT A MINIMUM OF 16" TO THE BOTTOM OF BOX ABOVE THE FINISHED FLOOR, UNLESS NOTED OTHERWISE. 18" IS ONLY AN ACCEPTABLE MOUNTING HEIGHT PENDING FOR MASONRY COARSE LINE INSTALLATION. COORDINATE ALL DEVICE HEIGHTS WITH ARCHITECT.
5. ELECTRICAL TRADES SHALL CONFIRM VOICE/DATA AND RECEPTACLE LOCATION WITH THE OWNER'S FURNITURE LAYOUTS AND INSTALLATION.
6. GENERAL PURPOSE DUPLEX RECEPTACLES SHALL BE WHITE, AS ADVISED BY THE ARCHITECT.
7. ALL BRANCH DEVICES SHALL USE A 4" SQUARE STEEL BOX WITH A SINGLE GANG TRIM RING FOR INTERIOR GYPSUM BOARD WALLS. MASONRY BOXES ARE ACCEPTABLE FOR MASONRY WALL INSTALLATION. NON-METALLIC BOXES ARE NOT ACCEPTABLE FOR THIS PROJECT.
8. J-HOOKS AND D-RINGS SHALL BE USED FOR THE LOW-VOLTAGE SYSTEM WIRING INCLUDING BUT NOT LIMITED TO: FIRE ALARM, VOICE, DATA, PA, LIGHTING CONTROL, ETC.
9. USE MINIMUM 1" CONDUIT SIZE FOR VOICE/DATA OUTLET DROPS. EXTEND THE CONDUIT TO THE ADJACENT CORRIDOR ACCESSIBLE CEILING SPACE.
10. MC CABLE IS ONLY ACCEPTABLE FOR FINAL LIGHT FIXTURE CONNECTIONS ABOVE THE LAY-IN CEILING ON THIS PROJECT, UNLESS SPECIFICALLY NOTED.
11. ELECTRICAL CONTRACTOR SHALL FURNISH AND INSTALL CAT6 CABLING BACK TO LOCAL DATA RACK. PROVIDE ALL TERMINATION JACKS AND FACEPLATES.
12. THE DESIGN INTENT OF THE NEW BUILDING ADDITION IS TO EXTEND THE EXISTING PUBLIC ADDRESS SYSTEM. THE EXISTING RAULAND SYSTEM SHALL BE EXTENDED INTO THE NEW BUILDING ADDITION. ALL COMMON AREA ZONES SHALL FUNCTION UTILIZING ZONE PAGING AMPLIFIERS. ALL INDIVIDUAL ROOMS WITH SPEAKERS SHALL BE INDEPENDENT CAT6 CABLING BACK TO THE NEAREST DATA RACK FOR INDIVIDUAL PAGING.

STATE OF MICHIGAN
August 28, 2026
MAI #2026-01014

KEY PLAN

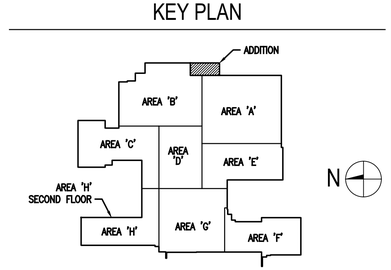

MACMILLAN ASSOCIATES
CONSULTING ENGINEERS
714 EAST MIDLAND STREET • BAY CITY, MICHIGAN 48706
(989) 894-4300 F (989) 894-9930 WWW.MACMILLANASSOCIATES.COM

MARQUETTE OFFICE:
1021 W. BARAGA AVENUE
MARQUETTE, MI 49855
PHONE: (906)228-4493
FAX: (906)228-7524
BRIGHTON OFFICE:
8011 W. GRAND RIVER AVE., SUITE 600
BRIGHTON, MI 48116
PHONE: (810)229-2701
FAX: (810)229-8787

ARCHITECTURE ENGINEERING CONSULTING
INTEGRATED DESIGNS INC.

HARBOR BEACH PUBLIC SCHOOLS
PHASE 1 - 2026 ADDITION & RENOVATIONS
HARBOR BEACH, MICHIGAN
PROJECT NO. 24-128

	BY	DATE
DESIGN	BS	08/28/26
DRAWN	RLM	08/28/26
CHECKED	BS	08/28/26
APPROVED	JWF	08/28/26

NO.	REVISIONS	DATE
0	FOR CONSTRUCTION	08/28/26

FIRST FLOOR PLAN 'ADDITION' - POWER AND SYSTEMS

COPYRIGHT © 2025 INTEGRATED DESIGNS INC.

E3.1

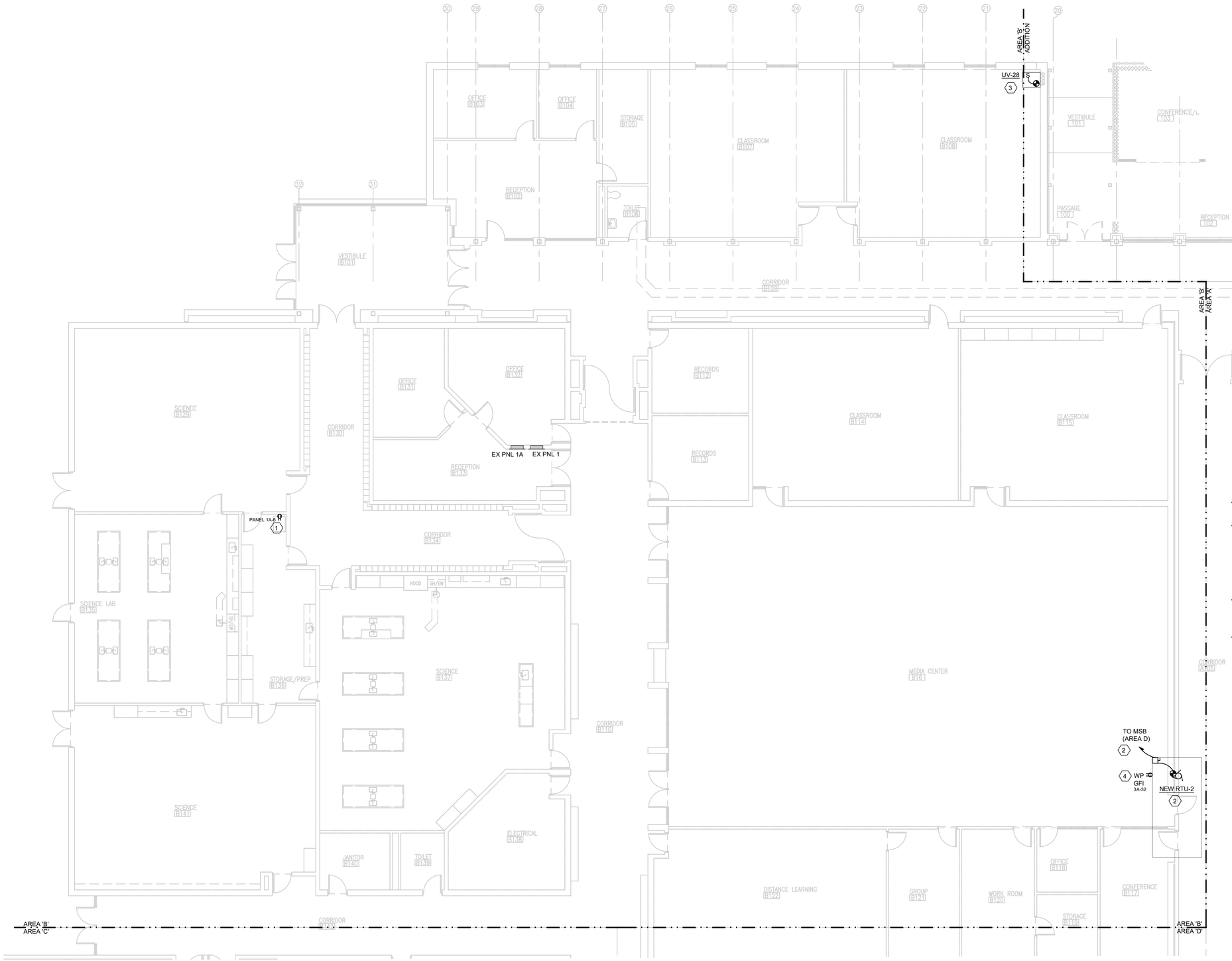

FLOOR PLAN AREA 'B' - POWER AND SYSTEMS
1/8"=1'-0"

GENERAL NOTES

1. ALL RECEPTACLES LOCATED SHALL BE WHITE DEVICES WITH STAINLESS STEEL COVERPLATES.
2. ELECTRICAL CONTRACTOR SHALL NOT CORE THROUGH STRUCTURAL MEMBERS.
3. ELECTRICAL CONTRACTOR MAY REUSE EXISTING CIRCUITS WHEN POSSIBLE OTHERWISE PROVIDE NEW.
4. ELECTRICAL CONTRACTOR SHALL FURNISH AND INSTALL NEW J-HOOKS AND SUPPORTS FOR ANY EXISTING CONDUITS AND LOW VOLTAGE CABLING LOCATED ABOVE THE CEILING.
5. ELECTRICAL CONTRACTOR SHALL FURNISH AND INSTALL ALL CONDUIT, BOXES, LINE VOLTAGE WIRING, LINE VOLTAGE CONNECTIONS, RECEPTACLES, SUPPORTS AS REQUIRED FOR A/V INSTALLATION.
6. ALL RECEPTACLES SHALL BE TAMPER RESISTANT.

POWER & SYSTEMS WIRING METHODS

1. PROVIDE A DEDICATED NEUTRAL CONDUCTOR FOR EACH RECEPTACLE CIRCUIT. SHARED NEUTRALS ARE NOT PERMITTED.
2. PROVIDE EQUIPMENT GROUNDING CONDUCTOR FOR EACH RECEPTACLE. PROVIDE A #12 MINIMUM GROUNDING CONDUCTOR IN EACH RACEWAY. THE USE OF METAL CONDUIT OR RACEWAY FOR A BOND PATH IS NOT ACCEPTABLE FOR THIS PROJECT. PROVIDE ISOLATED GROUND CONDUCTOR FOR THE A/V CIRCUITS AS NOTED AND SPECIFIED.
3. ALL POWER WIRING SHALL BE INSTALLED IN CONDUIT.
4. ALL NEW RECEPTACLES AND VOICE/DATA OUTLETS SHALL BE MOUNTED AT A MINIMUM OF 16" TO THE BOTTOM OF BOX ABOVE THE FINISHED FLOOR, UNLESS NOTED OTHERWISE. 18" IS ONLY AN ACCEPTABLE MOUNTING HEIGHT PENDING FOR MASONRY COARSE LINE INSTALLATION. COORDINATE ALL DEVICE HEIGHTS WITH ARCHITECT.
5. ELECTRICAL TRADES SHALL CONFIRM VOICE/DATA AND RECEPTACLE LOCATION WITH THE OWNER'S FURNITURE LAYOUTS AND INSTALLATION.
6. GENERAL PURPOSE DUPLEX RECEPTACLES SHALL BE WHITE, AS ADVISED BY THE ARCHITECT.
7. ALL BRANCH DEVICES SHALL USE A 4" SQUARE STEEL BOX WITH A SINGLE GANG TRIM RING FOR INTERIOR GYPSUM BOARD WALLS. MASONRY BOXES ARE ACCEPTABLE FOR MASONRY WALL INSTALLATION. NON-METALLIC BOXES ARE NOT ACCEPTABLE FOR THIS PROJECT.
8. J-HOOKS AND D-RINGS SHALL BE USED FOR THE LOW-VOLTAGE SYSTEM WIRING INCLUDING BUT NOT LIMITED TO. FIRE ALARM, VOICE, DATA, PA, LIGHTING CONTROL, ETC.
9. USE MINIMUM 1" CONDUIT SIZE FOR VOICE/DATA OUTLET DROPS. EXTEND THE CONDUIT TO THE ADJACENT CORRIDOR ACCESSIBLE CEILING SPACE.
10. MC CABLE IS ONLY ACCEPTABLE FOR FINAL LIGHT FIXTURE CONNECTIONS ABOVE THE LAY-IN CEILING ON THIS PROJECT, UNLESS SPECIFICALLY NOTED.
11. ELECTRICAL CONTRACTOR SHALL FURNISH AND INSTALL CAT6 CABLING BACK TO LOCAL DATA RACK. PROVIDE ALL TERMINATION JACKS AND FACEPLATES.

KEYED NOTES

1. FURNISH AND INSTALL NEW DUPLEX RECEPTACLE FOR NEW CHEMICAL STORAGE CABINET.FURNISH AND INSTALL 500 SERIES WIREMOLD AND SURFACE MOUNTED RECEPTACLE. PAINT TO MATCH WALL.
2. ELECTRICAL CONTRACTOR SHALL FURNISH AND INSTALL NEW FEED FOR RTU-2. FURNISH AND INSTALL SINGLE POINT POWER CONNECTION TO NEW ROOF TOP UNIT. FOLLOW ROUTING OF NEW RTU-2 FEED AS DENOTED ON E0.2 INTO CORRIDOR A105. ONCE IN CORRIDOR A105, ROUTE FEED THROUGH THE ROOF AND INTO THE NEW RTU-2 LOCATION. ELECTRICAL CONTRACTOR IS RESPONSIBLE FOR THE SEALING ALL ROOF PENETRATIONS.
3. RECONNECT THE EXISTING UNIT VENTILATOR. MECHANICAL TRADES ARE TO ROTATE THE UNIT VENTILATOR IN THE SAME LOCATION. COORDINATE WITH MECHANICAL TRADES TO REINSTALL ELECTRICAL FEED. SPLICE/EXTEND AND REWORK AS REQUIRED.
4. FURNISH AND INSTALL NEW 120V CIRCUIT FOR NEW ROOFTOP WEATHERPROOF SERVICE RECEPTACLE WITH METALLIC IN-USE COVERPLATE FROM PANEL 3A AHEAD OF ANY SWITCHING.

STATE OF MICHIGAN
August 28, 2026
MAI #2026-01014

KEY PLAN

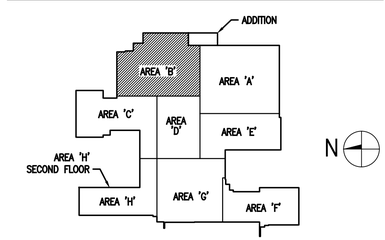

MACMILLAN ASSOCIATES
CONSULTING ENGINEERS
714 EAST MIDLAND STREET • BAY CITY, MICHIGAN 48706
(989) 894-4300 F (989) 894-9930 WWW.MACMILLANASSOCIATES.COM

MARQUETTE OFFICE:
1021 W. BARAGA AVENUE
MARQUETTE, MI 49855
PHONE: (906)228-4660
FAX: (906)228-7524
BRIGHTON OFFICE:
8011 W. GRAND RIVER AVE., SUITE 600
BRIGHTON, MI 48116
PHONE: (810)229-2701
FAX: (810)229-6787

ARCHITECTURE ENGINEERING CONSULTING
INTEGRATED DESIGNS INC.

HARBOR BEACH PUBLIC SCHOOLS
PHASE 1 - 2026 ADDITION & RENOVATIONS
HARBOR BEACH, MICHIGAN
PROJECT NO. 24-128

NO.	REVISIONS	DATE
0	FOR CONSTRUCTION	08/28/26

	BY	DATE
DESIGN	BS	08/28/26
DRAWN	RLM	08/28/26
CHECKED	BS	08/28/26
APPROVED	JWF	08/28/26

FLOOR PLAN AREA 'B' - POWER AND SYSTEMS

COPYRIGHT © 2025 INTEGRATED DESIGNS INC.

E3.2

GENERAL NOTES

1. ALL RECEPTACLES LOCATED SHALL BE WHITE DEVICES WITH STAINLESS STEEL COVERPLATES.
2. ELECTRICAL CONTRACTOR SHALL NOT CORE THROUGH STRUCTURAL MEMBERS.
3. ELECTRICAL CONTRACTOR MAY REUSE EXISTING CIRCUITS WHEN POSSIBLE OTHERWISE PROVIDE NEW.
4. ELECTRICAL CONTRACTOR SHALL FURNISH AND INSTALL NEW J-HOOKS AND SUPPORTS FOR ANY EXISTING CONDUITS AND LOW VOLTAGE CABLING LOCATED ABOVE THE CEILING.
5. ELECTRICAL CONTRACTOR SHALL FURNISH AND INSTALL ALL CONDUIT, BOXES, LINE VOLTAGE WIRING, LINE VOLTAGE CONNECTIONS, RECEPTACLES, SUPPORTS AS REQUIRED FOR A/V INSTALLATION.
6. ALL RECEPTACLES SHALL BE TAMPER RESISTANT.
7. ALL RECEPTACLES IN THE HOME EC ROOM SHALL BE INSTALLED WITH 700 SERIES WIREMOLD. COORDINATE DROP LOCATIONS WITH ARCHITECTURAL CHASE AND CABINET LOCATIONS. PAINT WIREMOLD TO MATCH NEW WALL COLOR.
8. ELECTRICAL CONTRACTOR SHALL REFER TO CAPTIVEAIRE DESIGN DRAWINGS FOR ALL ELECTRICAL CONTRACTOR REQUIRED INSTALLATION AND DESIGN REQUIREMENTS. ELECTRICAL CONTRACTOR IS RESPONSIBLE FOR ALL EQUIPMENT, RACEWAYS, FEEDS, BOXES, SUPPORTS SHOWN ON THE CAPTIVEAIRE DRAWINGS AS SPECIFIED BY THE MANUFACTURER TO SUPPORT THE DESIGN, INSTALLATION, AND OPERATION OF THE SYSTEM.

POWER & SYSTEMS WIRING METHODS

1. PROVIDE A DEDICATED NEUTRAL CONDUCTOR FOR EACH RECEPTACLE CIRCUIT. SHARED NEUTRALS ARE NOT PERMITTED.
2. PROVIDE EQUIPMENT GROUNDING CONDUCTOR FOR EACH RECEPTACLE. PROVIDE A #12 MINIMUM GROUNDING CONDUCTOR IN EACH RACEWAY. THE USE OF METAL CONDUIT OR RACEWAY FOR A BOND PATH IS NOT ACCEPTABLE FOR THIS PROJECT. PROVIDE ISOLATED GROUND CONDUCTOR FOR THE A/V CIRCUITS AS NOTED AND SPECIFIED.
3. ALL POWER WIRING SHALL BE INSTALLED IN CONDUIT.
4. ALL NEW RECEPTACLES AND VOICE/DATA OUTLETS SHALL BE MOUNTED AT A MINIMUM OF 16" TO THE BOTTOM OF BOX ABOVE THE FINISHED FLOOR, UNLESS NOTED OTHERWISE. 18" IS ONLY AN ACCEPTABLE MOUNTING HEIGHT PENDING FOR MASONRY COARSE LINE INSTALLATION. COORDINATE ALL DEVICE HEIGHTS WITH ARCHITECT.
5. ELECTRICAL TRADES SHALL CONFIRM VOICE/DATA AND RECEPTACLE LOCATION WITH THE OWNER'S FURNITURE LAYOUTS AND INSTALLATION.
6. GENERAL PURPOSE DUPLEX RECEPTACLES SHALL BE WHITE, AS ADVISED BY THE ARCHITECT.
7. ALL BRANCH DEVICES SHALL USE A 4" SQUARE STEEL BOX WITH A SINGLE GANG TRIM RING FOR INTERIOR GYPSUM BOARD WALLS. MASONRY BOXES ARE ACCEPTABLE FOR MASONRY WALL INSTALLATION. NON-METALLIC BOXES ARE NOT ACCEPTABLE FOR THIS PROJECT.
8. J-HOOKS AND D-RINGS SHALL BE USED FOR THE LOW-VOLTAGE SYSTEM WIRING INCLUDING BUT NOT LIMITED TO: FIRE ALARM, VOICE, DATA, PA, LIGHTING CONTROL, ETC.
9. USE MINIMUM 1" CONDUIT SIZE FOR VOICE/DATA OUTLET DROPS. EXTEND THE CONDUIT TO THE ADJACENT CORRIDOR ACCESSIBLE CEILING SPACE.
10. MC CABLE IS ONLY ACCEPTABLE FOR FINAL LIGHT FIXTURE CONNECTIONS ABOVE THE LAY-IN CEILING ON THIS PROJECT, UNLESS SPECIFICALLY NOTED.
11. ELECTRICAL CONTRACTOR SHALL FURNISH AND INSTALL CAT6 CABLING BACK TO LOCAL DATA RACK. PROVIDE ALL TERMINATION JACKS AND FACEPLATES.
12. ALL KITCHEN MECHANICAL EXHAUST FANS, MAKE UP AIR UNITS, AND ALL ITEMS UNDER THE KITCHEN HOODS SHALL BE ROUTED THROUGH THE EMERGENCY SHUTDOWN PANELS.

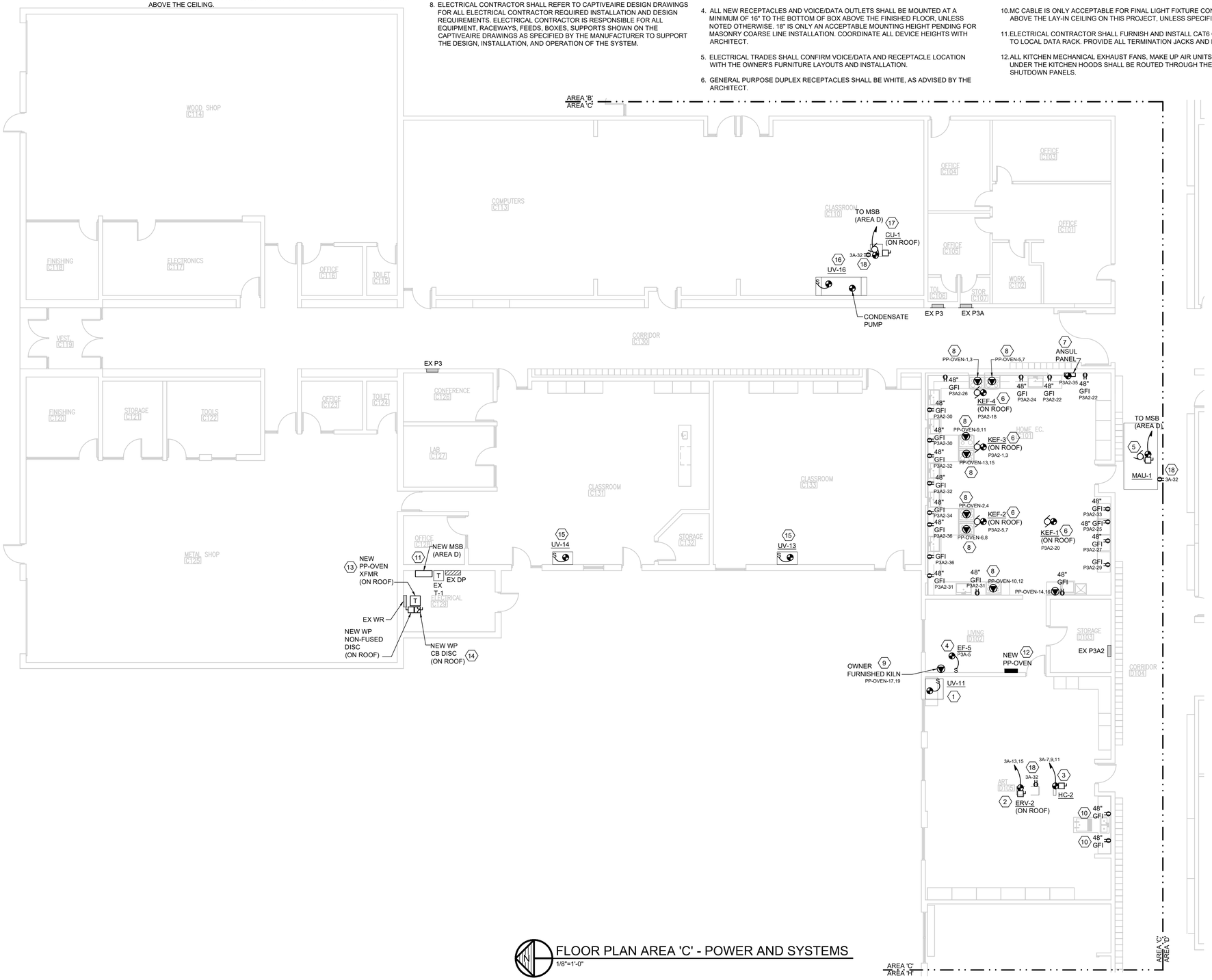

FLOOR PLAN AREA 'C' - POWER AND SYSTEMS
1/8"=1'-0"

KEYED NOTES

1. ELECTRICAL CONTRACTOR SHALL REUSE THE EXISTING 120V UNIT VENTILATOR CIRCUIT. THE EXISTING UNIT VENTILATOR IS CURRENTLY A UNDER THE WINDOW UNIT AND IS CHANGING TO A FLOOR MOUNTED TALL CABINET TYPE. ELECTRICAL CONTRACTOR SHALL SPLICE AND REWORK/EXTEND THE CIRCUIT AS REQUIRED. FIELD VERIFY THE EXISTING CIRCUIT LOCATION AND CONDITION. IF A NEW CIRCUIT LOCATION IS REQUIRED, REWORK THE CIRCUIT IN THE TUNNEL AND PENETRATE THE SLAB TO FEED THE NEW UNIT VENTILATOR. FURNISH AND INSTALL NEW LOCKABLE TOGGLE DISCONNECT IN AN ACCESSIBLE LOCATION.
2. ELECTRICAL CONTRACTOR SHALL FURNISH AND INSTALL NEW FEED FOR NEW ERV-2. ELECTRICAL CONTRACTOR SHALL PROVIDE SINGLE POINT POWER CONNECTION TO MECHANICALLY FURNISHED DISCONNECT.
3. ELECTRICAL CONTRACTOR SHALL FURNISH AND INSTALL NEW FEED FOR NEW HC-2. ELECTRICAL CONTRACTOR SHALL PROVIDE SINGLE POINT POWER CONNECTION TO MECHANICALLY FURNISHED DISCONNECT.
4. ELECTRICAL CONTRACTOR SHALL FURNISH AND INSTALL LOCKABLE TOGGLE DISCONNECT FOR KILN EXHAUST FAN OPERATION. FURNISH AND INSTALL NEW FEED AND SINGLE POINT POWER CONNECTION. WIRE PER MANUFACTURERS SPECIFICATIONS.
5. ELECTRICAL CONTRACTOR SHALL FURNISH AND INSTALL NEW SINGLE POINT POWER CONNECTION TO NEW MAU-1 ON THE ROOF. REFER TO CAPTIVEAIRE DESIGN DRAWINGS FOR ALL POWER AND CONTROL WIRING AND TERMINATION REQUIREMENTS DENOTED.
6. ELECTRICAL CONTRACTOR SHALL FURNISH AND INSTALL NEW SINGLE POINT POWER CONNECTION TO NEW KITCHEN EXHAUST FANS. REFER TO CAPTIVEAIRE DESIGN DRAWINGS FOR ALL POWER AND CONTROL WIRING AND TERMINATION REQUIREMENTS DENOTED.
7. ANSUL PANEL LOCATION TO BE LOCATED BY HVAC CONSULTANT. PROVIDE 120V CONNECTION TO ANSUL PANEL. ELECTRICAL CONTRACTOR SHALL FURNISH AND INSTALL NEW FIRE ALARM CIRCUIT FROM ANSUL PANEL TO FIRE ALARM CONTROL PANEL.
8. ELECTRICAL CONTRACTOR SHALL FURNISH AND INSTALL NEW OVEN FEED AND RECEPTACLE. ROUTE CONDUIT AND FEED THROUGH THE CABINET SPACE. COORDINATE FINAL ROUTING WITH ARCHITECT PRIOR TO INSTALLATION.
9. ELECTRICAL CONTRACTOR SHALL FURNISH AND INSTALL NEW RECEPTACLE AND FEED FOR THE EXISTING KILN. SURFACE MOUNT CONDUIT ON THE WALL AND INTO THE ACCESSIBLE CEILING SPACE. COORDINATE FINAL LOCATION OF KILN WITH OWNER PRIOR TO INSTALLATION.
10. FURNISH AND INSTALL NEW COUNTERTOP RECEPTACLES IN THE ART ROOM. UTILIZE EXISTING CIRCUIT. SPLICE AND REWORK AS REQUIRED.
11. NEW MSB (AREA D). REFER TO E0.2 AND ONE LINE DIAGRAM FOR INSTALLATION INSTRUCTIONS.
12. NEW PP-OVEN. REFER TO E0.2 AND ONE LINE DIAGRAM FOR INSTALLATION INSTRUCTIONS. INSTALL PANELBOARD ON WALL IN AN ACCESSIBLE LOCATION.FURNISH AND INSTALL PANELBOARD WITH SHUNT TRIP MAIN CIRCUIT BREAKER. THE DESIGN INTENT IS TO HAVE THE PANEL SHUTDOWN IF THE ANSUL SYSTEM IS ACTIVATED.
13. NEW PP-OVEN TRANSFORMER. REFER TO E0.2 AND ONE LINE DIAGRAM FOR INSTALLATION INSTRUCTIONS. INSTALL THE TRANSFORMER ON THE ELECTRICAL ROOM ROOF. TRANSFORMER SHALL BE NEMA 3R RATED. ELECTRICAL CONTRACTOR IS RESPONSIBLE FOR ALL MOUNTING AND COORDINATION WITH STRUCTURAL ENGINEER.
14. NEW LINE SIDE TRANSFORMER DISCONNECT. FURNISH AND INSTALL DISCONNECT ON A UNISTRUT RACK IN AN ACCESSIBLE LOCATION ON THE ROOF. UTILIZE THE STRUCTURAL CURB TO MOUNT THE DISCONNECT NEXT TO THE TRANSFORMER. REFER TO UNISTRUT RACK DETAIL FOR INSTALLATION INSTRUCTIONS. DISCONNECT SHALL BE NEMA 3R RATED.
15. ELECTRICAL CONTRACTOR SHALL REUSE THE EXISTING 120V UNIT VENTILATOR CIRCUIT. THE EXISTING UNIT VENTILATOR IS CURRENTLY A CEILING UNIT AND IS CHANGING TO A FLOOR MOUNTED TALL CABINET TYPE. ELECTRICAL CONTRACTOR SHALL SPLICE AND REWORK/EXTEND THE CIRCUIT AS REQUIRED. FIELD VERIFY THE EXISTING CIRCUIT LOCATION AND CONDITION. ELECTRICAL CONTRACTOR SHALL FURNISH AND INSTALL NEW SURFACE MOUNTED CONDUIT DOWN THE WALL TO THE NEW UNIT VENTILATOR LOCATION.
16. ELECTRICAL CONTRACTOR SHALL REUSE THE EXISTING 120V UNIT VENTILATOR CIRCUIT. THE EXISTING UNIT VENTILATOR IS CURRENTLY A CEILING UNIT AND IS STAYING AS A CEILING UNIT. ELECTRICAL CONTRACTOR SHALL SPLICE AND REWORK/EXTEND THE CIRCUIT AS REQUIRED. FIELD VERIFY THE EXISTING CIRCUIT LOCATION AND CONDITION. ELECTRICAL CONTRACTOR SHALL UTILIZE 120V UNIT VENTILATOR CIRCUIT TO POWER NEW CONDENSATE PUMP. SPLICE AND EXTEND CIRCUIT AS REQUIRED.
17. ELECTRICAL CONTRACTOR SHALL FURNISH AND INSTALL NEW CONDUIT AND FEED FROM MSB (AREA D) TO NEW CONDENSING UNIT ON THE ROOF. FURNISH AND INSTALL NON FUSED DISCONNECT IN AN ACCESSIBLE LOCATION.
18. FURNISH AND INSTALL NEW 120V CIRCUIT FOR NEW ROOFTOP WEATHERPROOF SERVICE RECEPTACLE WITH METALLIC IN-USE COVERPLATE FROM PANEL 3A AHEAD OF ANY SWITCHING.

STATE OF MICHIGAN
JAMES W. NEW
No. 6201047850
LICENSED PROFESSIONAL ENGINEER

August 28, 2026
MAI #2026-01014

KEY PLAN

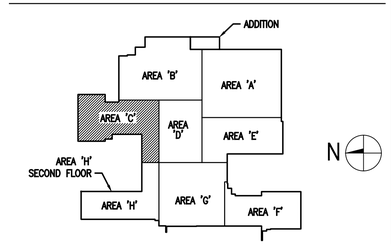

MACMILLAN ASSOCIATES
CONSULTING ENGINEERS
714 EAST MIDLAND STREET • BAY CITY, MICHIGAN 48706
(989) 894-4300 F (989) 894-9930 WWW.MACMILLANASSOCIATES.COM

MARQUETTE OFFICE:
1021 W. BARGA AVENUE
MARQUETTE, MI 49855
PHONE: (906)228-4693
FAX: (906)228-7524

BRIGHTON OFFICE:
8011 W. GRAND RIVER AVE., SUITE 600
BRIGHTON, MI 48116
PHONE: (810)229-2701
FAX: (810)229-8787

ARCHITECTURE
ENGINEERING
CONSULTING
INTEGRATED DESIGNS INC.

HARBOR BEACH PUBLIC SCHOOLS
PHASE 1 - 2026 ADDITION & RENOVATIONS
HARBOR BEACH, MICHIGAN
PROJECT NO. 24-128

NO.	REVISIONS	DATE
0	FOR CONSTRUCTION	08/28/26

	BY	DATE
DESIGN	BS	08/28/26
DRAWN	RLM	08/28/26
CHECKED	BS	08/28/26
APPROVED	JWF	08/28/26

FLOOR PLAN AREA 'C' - POWER AND SYSTEMS

COPYRIGHT © 2025 INTEGRATED DESIGNS INC.

E3.3

KEYED NOTES

1. FURNISH AND INSTALL NEW LOCKABLE TOGGLE DISCONNECT AND SINGLE POINT POWER CONNECTION FOR NEW BOILER. FURNISH AND INSTALL NEW 20A/1P CIRCUIT BREAKER IN EXISTING BOILER SHUNT TRIP PANEL FOR EMERGENCY SHUTDOWN WHEN THE SHUTDOWN SYSTEM IS ACTIVATED.

2. FURNISH AND INSTALL NEW DISCONNECT AND SINGLE POINT POWER CONNECTION TO NEW BOILER PUMP. FURNISH AND INSTALL NEW 20A/2P CIRCUIT BREAKER IN EXISTING BOILER SHUNT TRIP PANEL FOR EMERGENCY SHUTDOWN WHEN THE SHUTDOWN SYSTEM IS ACTIVATED. ELECTRICAL CONTRACTOR IS RESPONSIBLE FOR ALL FINAL FEED AND TERMINATIONS BETWEEN THE BOILER PANEL AND BOILER PUMP.

GENERAL NOTES

1. ALL RECEPTACLES LOCATED SHALL BE WHITE DEVICES WITH STAINLESS STEEL COVERPLATES.
2. ELECTRICAL CONTRACTOR SHALL NOT CORE THROUGH STRUCTURAL MEMBERS.
3. ELECTRICAL CONTRACTOR MAY REUSE EXISTING CIRCUITS WHEN POSSIBLE OTHERWISE PROVIDE NEW.
4. ELECTRICAL CONTRACTOR SHALL FURNISH AND INSTALL NEW J-HOOKS AND SUPPORTS FOR ANY EXISTING CONDUITS AND LOW VOLTAGE CABLING LOCATED ABOVE THE CEILING.
5. ELECTRICAL CONTRACTOR SHALL FURNISH AND INSTALL ALL CONDUIT, BOXES, LINE VOLTAGE WIRING, LINE VOLTAGE CONNECTIONS, RECEPTACLES, SUPPORTS AS REQUIRED FOR A/V INSTALLATION.
6. ALL RECEPTACLES SHALL BE TAMPER RESISTANT.

POWER & SYSTEMS WIRING METHODS

1. PROVIDE A DEDICATED NEUTRAL CONDUCTOR FOR EACH RECEPTACLE CIRCUIT. SHARED NEUTRALS ARE NOT PERMITTED.
2. PROVIDE EQUIPMENT GROUNDING CONDUCTOR FOR EACH RECEPTACLE. PROVIDE A #12 MINIMUM GROUNDING CONDUCTOR IN EACH RACEWAY. THE USE OF METAL CONDUIT OR RACEWAY FOR A BOND PATH IS NOT ACCEPTABLE FOR THIS PROJECT. PROVIDE ISOLATED GROUND CONDUCTOR FOR THE A/V CIRCUITS AS NOTED AND SPECIFIED.
3. ALL POWER WIRING SHALL BE INSTALLED IN CONDUIT.
4. ALL NEW RECEPTACLES AND VOICE/DATA OUTLETS SHALL BE MOUNTED AT A MINIMUM OF 16" TO THE BOTTOM OF BOX ABOVE THE FINISHED FLOOR, UNLESS NOTED OTHERWISE. 18" IS ONLY AN ACCEPTABLE MOUNTING HEIGHT PENDING FOR MASONRY COARSE LINE INSTALLATION. COORDINATE ALL DEVICE HEIGHTS WITH ARCHITECT.
5. ELECTRICAL TRADES SHALL CONFIRM VOICE/DATA AND RECEPTACLE LOCATION WITH THE OWNER'S FURNITURE LAYOUTS AND INSTALLATION.
6. GENERAL PURPOSE DUPLEX RECEPTACLES SHALL BE WHITE AS ADVISED BY THE ARCHITECT.
7. ALL BRANCH DEVICES SHALL USE A 4" SQUARE STEEL BOX WITH A SINGLE GANG TRIM RING FOR INTERIOR GYPSUM BOARD WALLS. MASONRY BOXES ARE ACCEPTABLE FOR MASONRY WALL INSTALLATION. NON-METALLIC BOXES ARE NOT ACCEPTABLE FOR THIS PROJECT.
8. J-HOOKS AND D-RINGS SHALL BE USED FOR THE LOW-VOLTAGE SYSTEM WIRING INCLUDING BUT NOT LIMITED TO. FIRE ALARM, VOICE, DATA, PA, LIGHTING CONTROL, ETC.
9. USE MINIMUM 1" CONDUIT SIZE FOR VOICE/DATA OUTLET DROPS. EXTEND THE CONDUIT TO THE ADJACENT CORRIDOR ACCESSIBLE CEILING SPACE.
10. MC CABLE IS ONLY ACCEPTABLE FOR FINAL LIGHT FIXTURE CONNECTIONS ABOVE THE LAY-IN CEILING ON THIS PROJECT, UNLESS SPECIFICALLY NOTED.
11. ELECTRICAL CONTRACTOR SHALL FURNISH AND INSTALL CAT6 CABLING BACK TO LOCAL DATA RACK. PROVIDE ALL TERMINATION JACKS AND FACEPLATES.

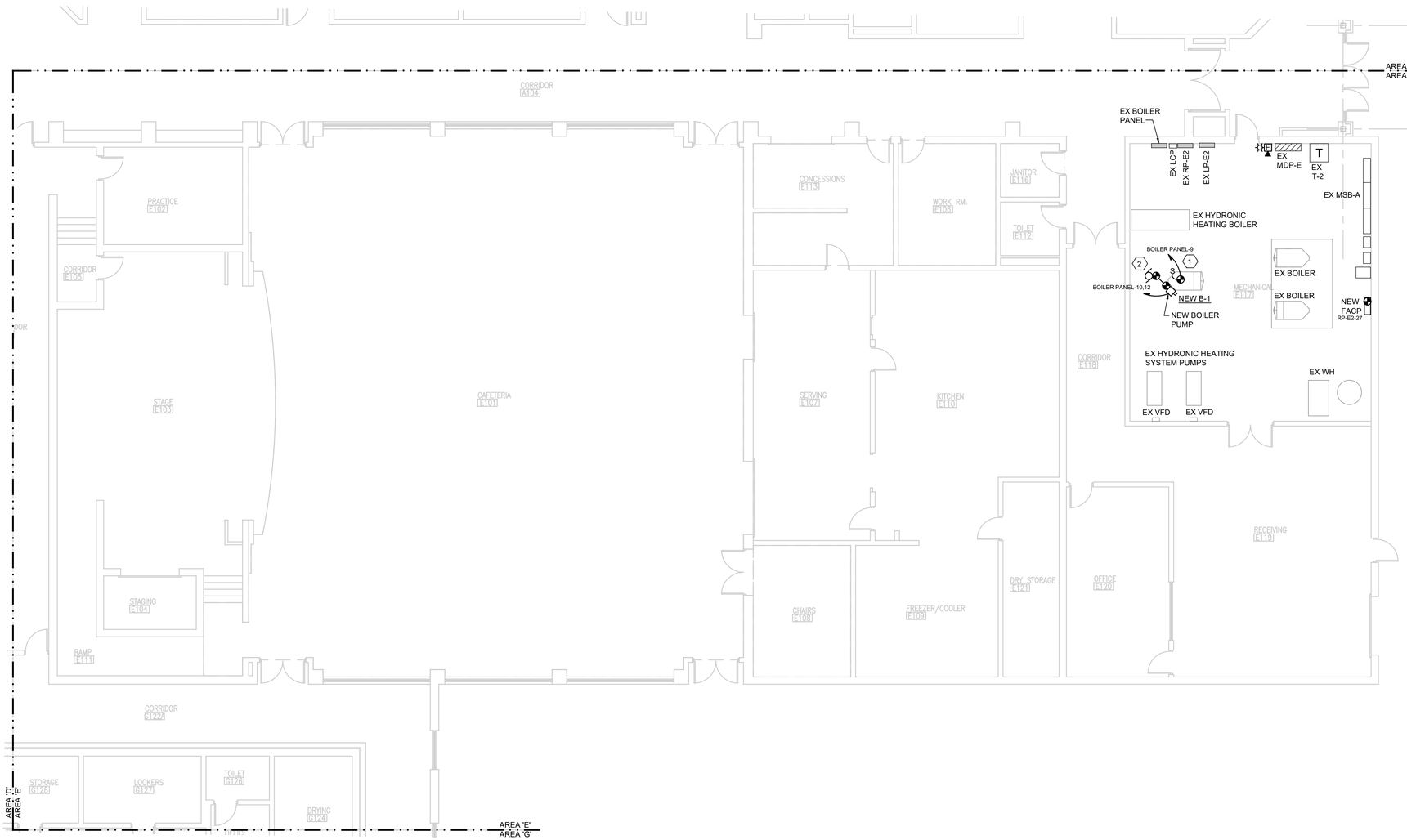

FLOOR PLAN AREA 'E' - POWER AND SYSTEMS
1/8"=1'-0"

KEY PLAN

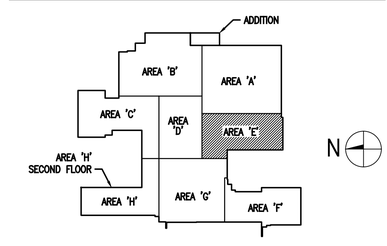

MACMILLAN ASSOCIATES
CONSULTING ENGINEERS
714 EAST MIDLAND STREET • BAY CITY, MICHIGAN 48706
(989) 894-4300 F (989) 894-9930 WWW.MACMILLANASSOCIATES.COM

STATE OF MICHIGAN
August 28, 2026
MAI #2026-01014

MARQUETTE OFFICE:
1021 W. BARGA AVENUE
MARQUETTE, MI 49855
PHONE: (906)228-4400
FAX: (906)228-7524
BRIGHTON OFFICE:
8011 W. GRAND RIVER AVE., SUITE 600
BRIGHTON, MICHIGAN 48116
PHONE: (810)229-2701
FAX: (810)229-4787

ARCHITECTURE ENGINEERING CONSULTING
INTEGRATED DESIGNS INC.

HARBOR BEACH PUBLIC SCHOOLS
PHASE 1 - 2026 ADDITION & RENOVATIONS
HARBOR BEACH, MICHIGAN
PROJECT NO. 24-128

NO.	REVISIONS	DATE
0	FOR CONSTRUCTION	08/28/26

	BY	DATE
DESIGN	BS	08/28/26
DRAWN	RLM	08/28/26
CHECKED	BS	08/28/26
APPROVED	JWF	08/28/26

FLOOR PLAN AREA 'E' - POWER AND SYSTEMS

COPYRIGHT © 2025 INTEGRATED DESIGNS INC.

E3.4

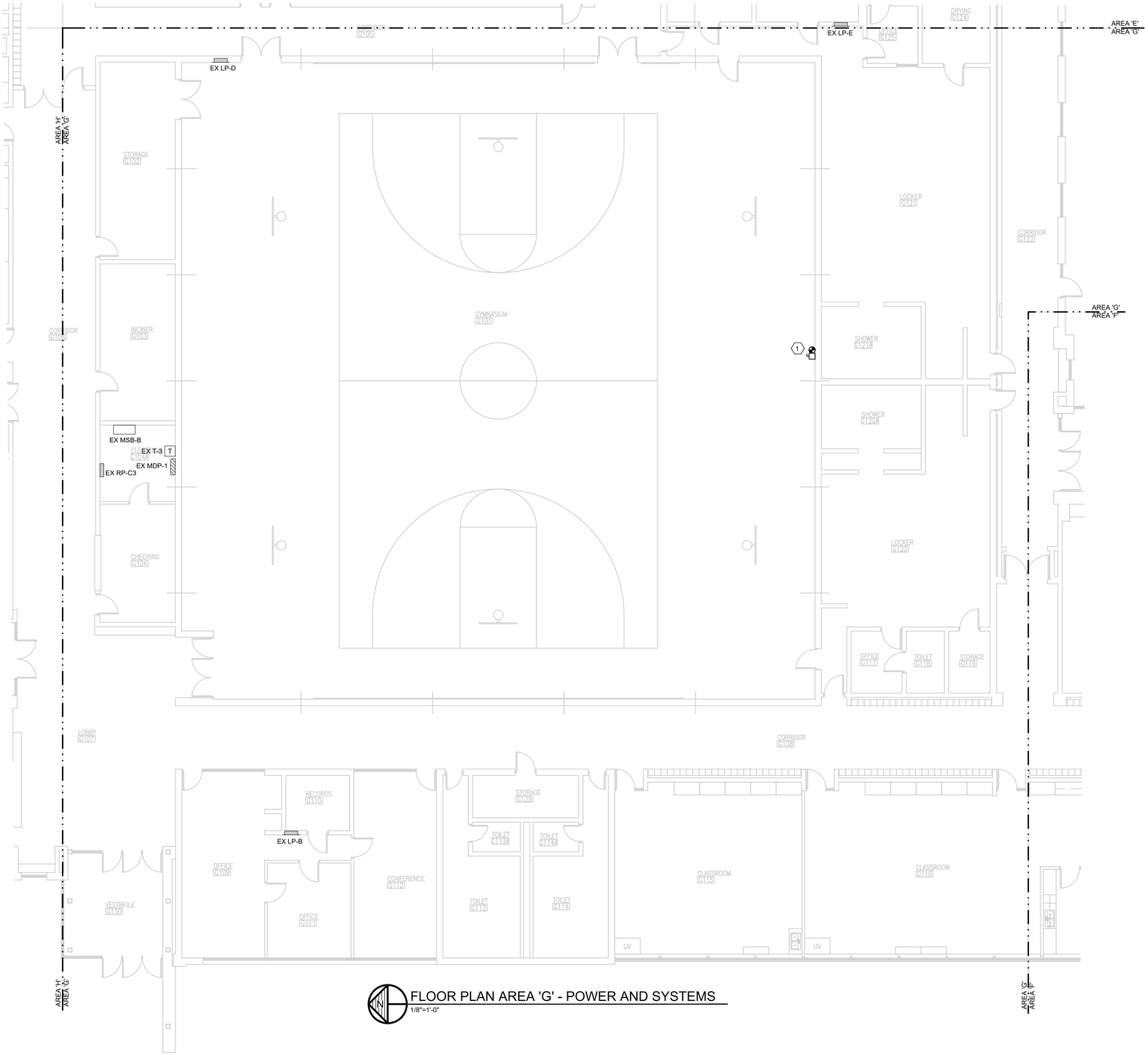

FLOOR PLAN AREA 'G' - POWER AND SYSTEMS
1/8"=1'-0"

GENERAL NOTES

1. ALL RECEPTACLES LOCATED SHALL BE WHITE DEVICES WITH STAINLESS STEEL COVERPLATES.
2. ELECTRICAL CONTRACTOR SHALL NOT CORE THROUGH STRUCTURAL MEMBERS.
3. ELECTRICAL CONTRACTOR MAY REUSE EXISTING CIRCUITS WHEN POSSIBLE OTHERWISE PROVIDE NEW.
4. ELECTRICAL CONTRACTOR SHALL FURNISH AND INSTALL NEW J-HOOKS AND SUPPORTS FOR ANY EXISTING CONDUITS AND LOW VOLTAGE CABLING LOCATED ABOVE THE CEILING.
5. ELECTRICAL CONTRACTOR SHALL FURNISH AND INSTALL ALL CONDUIT, BOXES, LINE VOLTAGE WIRING, LINE VOLTAGE CONNECTIONS, RECEPTACLES, SUPPORTS AS REQUIRED FOR A/V INSTALLATION.
6. ALL RECEPTACLES SHALL BE TAMPER RESISTANT.

POWER & SYSTEMS WIRING METHODS

1. PROVIDE A DEDICATED NEUTRAL CONDUCTOR FOR EACH RECEPTACLE CIRCUIT. SHARED NEUTRALS ARE NOT PERMITTED.
2. PROVIDE EQUIPMENT GROUNDING CONDUCTOR FOR EACH RECEPTACLE. PROVIDE A #12 MINIMUM GROUNDING CONDUCTOR IN EACH RACEWAY. THE USE OF METAL CONDUIT OR RACEWAY FOR A BOND PATH IS NOT ACCEPTABLE FOR THIS PROJECT. PROVIDE ISOLATED GROUND CONDUCTOR FOR THE A/V CIRCUITS AS NOTED AND SPECIFIED.
3. ALL POWER WIRING SHALL BE INSTALLED IN CONDUIT.
4. ALL NEW RECEPTACLES AND VOICE/DATA OUTLETS SHALL BE MOUNTED AT A MINIMUM OF 16" TO THE BOTTOM OF BOX ABOVE THE FINISHED FLOOR, UNLESS NOTED OTHERWISE. 18" IS ONLY AN ACCEPTABLE MOUNTING HEIGHT PENDING FOR MASONRY COARSE LINE INSTALLATION. COORDINATE ALL DEVICE HEIGHTS WITH ARCHITECT.
5. ELECTRICAL TRADES SHALL CONFIRM VOICE/DATA AND RECEPTACLE LOCATION WITH THE OWNER'S FURNITURE LAYOUTS AND INSTALLATION.
6. GENERAL PURPOSE DUPLEX RECEPTACLES SHALL BE WHITE, AS ADVISED BY THE ARCHITECT.
7. ALL BRANCH DEVICES SHALL USE A 4" SQUARE STEEL BOX WITH A SINGLE GANG TRIM RING FOR INTERIOR GYPSUM BOARD WALLS. MASONRY BOXES ARE ACCEPTABLE FOR MASONRY WALL INSTALLATION. NON-METALLIC BOXES ARE NOT ACCEPTABLE FOR THIS PROJECT.
8. J-HOOKS AND D-RINGS SHALL BE USED FOR THE LOW-VOLTAGE SYSTEM WIRING INCLUDING BUT NOT LIMITED TO. FIRE ALARM, VOICE, DATA, PA, LIGHTING CONTROL, ETC.
9. USE MINIMUM 1" CONDUIT SIZE FOR VOICE/DATA OUTLET DROPS. EXTEND THE CONDUIT TO THE ADJACENT CORRIDOR ACCESSIBLE CEILING SPACE.
10. MC CABLE IS ONLY ACCEPTABLE FOR FINAL LIGHT FIXTURE CONNECTIONS ABOVE THE LAY-IN CEILING ON THIS PROJECT, UNLESS SPECIFICALLY NOTED.
11. ELECTRICAL CONTRACTOR SHALL FURNISH AND INSTALL CAT6 CABLING BACK TO LOCAL DATA RACK. PROVIDE ALL TERMINATION JACKS AND FACEPLATES.

KEYED NOTES

1. FURNISH AND INSTALL NEW 30A/3P NON-FUSED DISCONNECT AND FEED TO THE NEW BLEACHERS IN THE K-8 GYM. ELECTRICAL CONTRACTOR SHALL COORDINATE WITH BLEACHER MANUFACTURER AND INSTALL ALL REQUIRED RACEWAYS, ROUGH-INS, AND FEEDS ASSOCIATED WITH THE BLEACHER ASSEMBLY. REUSE EXISTING 30A/3P HOME-RUN FEEDER.

STATE OF MICHIGAN
August 28, 2026
MAI #2026-01014

KEY PLAN

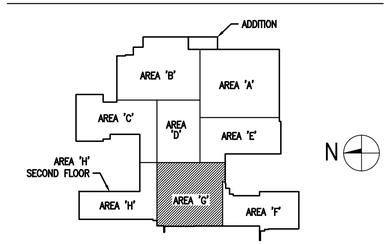

MACMILLAN ASSOCIATES
CONSULTING ENGINEERS
714 EAST MIDLAND STREET • BAY CITY, MICHIGAN 48706
(989) 894-4300 F (989) 894-9930 WWW.MACMILLANASSOCIATES.COM

MARQUETTE OFFICE:
1021 W. BARGA AVENUE
MARQUETTE, MI 49855
PHONE: (906)228-4600
FAX: (906)228-7524
BRIGHTON OFFICE:
8011 W. GRAND RIVER AVE., SUITE 600
BRIGHTON, MI 48116
PHONE: (810)229-2701
FAX: (810)229-8787

ARCHITECTURE ENGINEERING CONSULTING
INTEGRATED DESIGNS INC.

HARBOR BEACH PUBLIC SCHOOLS
PHASE 1 - 2026 ADDITION & RENOVATIONS
HARBOR BEACH, MICHIGAN
PROJECT NO. 24-128

NO.	REVISIONS	DATE
0	FOR CONSTRUCTION	08/28/26

	BY	DATE
DESIGN	BS	08/28/26
DRAWN	RLM	08/28/26
CHECKED	BS	08/28/26
APPROVED	JWF	08/28/26

FLOOR PLAN AREA 'G' - POWER AND SYSTEMS

COPYRIGHT © 2025 INTEGRATED DESIGNS INC.

E3.5

KEYED NOTES

1. ELECTRICAL CONTRACTOR SHALL REUSE THE EXISTING 120V UNIT VENTILATOR CIRCUIT. THE EXISTING UNIT VENTILATOR IS CURRENTLY A UNDER THE WINDOW UNIT AND IS CHANGING TO A FLOOR MOUNTED TALL CABINET TYPE. ELECTRICAL CONTRACTOR SHALL SPLICE AND REWORK/EXTEND THE CIRCUIT AS REQUIRED. FIELD VERIFY THE EXISTING CIRCUIT LOCATION AND CONDITION. IF A NEW CIRCUIT LOCATION IS REQUIRED, REWORK THE CIRCUIT IN THE TUNNEL AND PENETRATE THE SLAB TO FEED THE NEW UNIT VENTILATOR. FURNISH AND INSTALL LOCKABLE TOGGLE DISCONNECT IN AN ACCESSIBLE LOCATION.

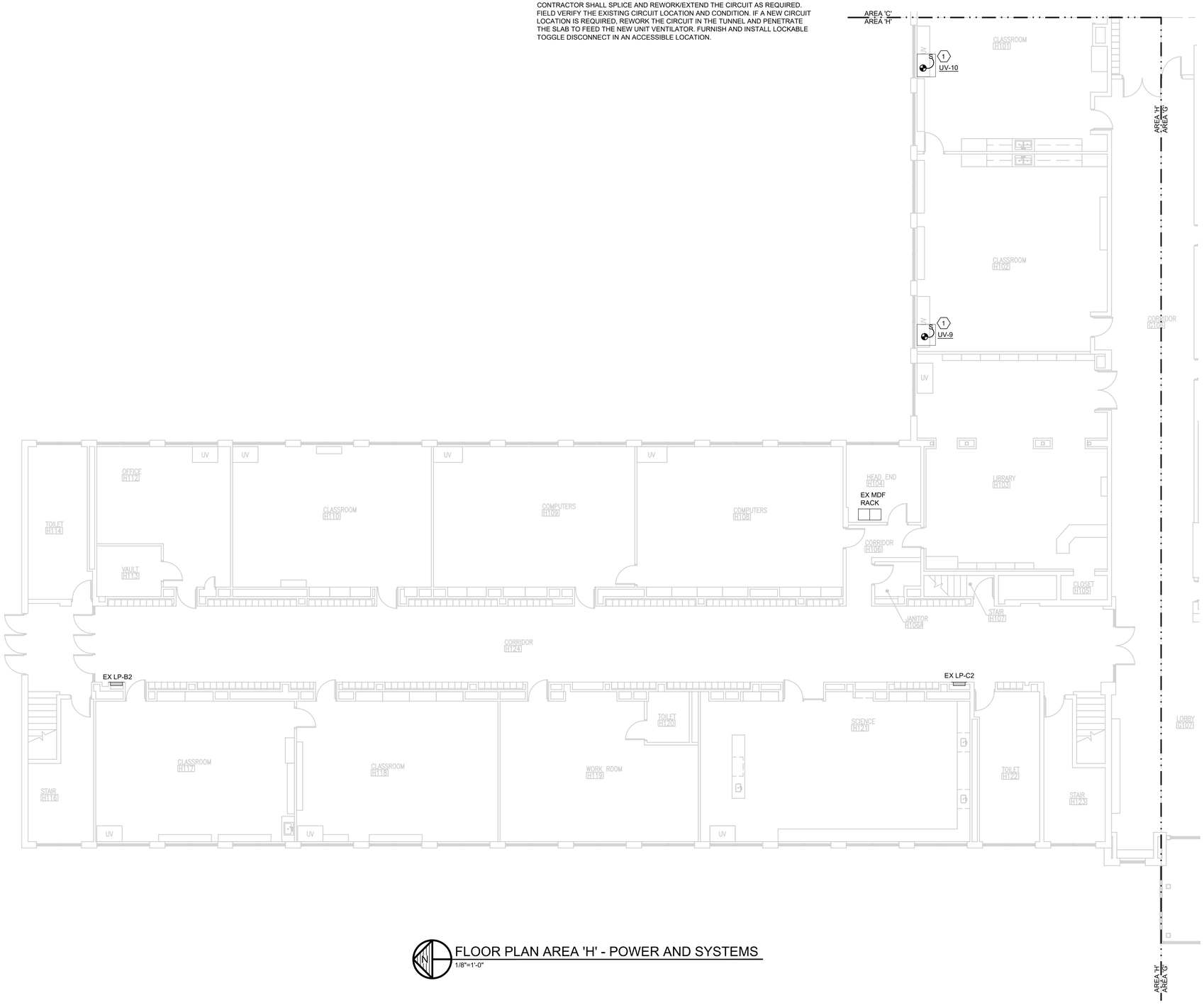

FLOOR PLAN AREA 'H' - POWER AND SYSTEMS
1/8"=1'-0"

GENERAL NOTES

1. ALL RECEPTACLES LOCATED SHALL BE WHITE DEVICES WITH STAINLESS STEEL COVERPLATES.
2. ELECTRICAL CONTRACTOR SHALL NOT CORE THROUGH STRUCTURAL MEMBERS.
3. ELECTRICAL CONTRACTOR MAY REUSE EXISTING CIRCUITS WHEN POSSIBLE OTHERWISE PROVIDE NEW.
4. ELECTRICAL CONTRACTOR SHALL FURNISH AND INSTALL NEW J-HOOKS AND SUPPORTS FOR ANY EXISTING CONDUITS AND LOW VOLTAGE CABLING LOCATED ABOVE THE CEILING.
5. ELECTRICAL CONTRACTOR SHALL FURNISH AND INSTALL ALL CONDUIT, BOXES, LINE VOLTAGE WIRING, LINE VOLTAGE CONNECTIONS, RECEPTACLES, SUPPORTS AS REQUIRED FOR A/V INSTALLATION.
6. ALL RECEPTACLES SHALL BE TAMPER RESISTANT.

POWER & SYSTEMS WIRING METHODS

1. PROVIDE A DEDICATED NEUTRAL CONDUCTOR FOR EACH RECEPTACLE CIRCUIT. SHARED NEUTRALS ARE NOT PERMITTED.
2. PROVIDE EQUIPMENT GROUNDING CONDUCTOR FOR EACH RECEPTACLE. PROVIDE A #12 MINIMUM GROUNDING CONDUCTOR IN EACH RACEWAY. THE USE OF METAL CONDUIT OR RACEWAY FOR A BOND PATH IS NOT ACCEPTABLE FOR THIS PROJECT. PROVIDE ISOLATED GROUND CONDUCTOR FOR THE A/V CIRCUITS AS NOTED AND SPECIFIED.
3. ALL POWER WIRING SHALL BE INSTALLED IN CONDUIT.
4. ALL NEW RECEPTACLES AND VOICE/DATA OUTLETS SHALL BE MOUNTED AT A MINIMUM OF 16" TO THE BOTTOM OF BOX ABOVE THE FINISHED FLOOR, UNLESS NOTED OTHERWISE. 18" IS ONLY AN ACCEPTABLE MOUNTING HEIGHT PENDING FOR MASONRY COARSE LINE INSTALLATION. COORDINATE ALL DEVICE HEIGHTS WITH ARCHITECT.
5. ELECTRICAL TRADES SHALL CONFIRM VOICE/DATA AND RECEPTACLE LOCATION WITH THE OWNER'S FURNITURE LAYOUTS AND INSTALLATION.
6. GENERAL PURPOSE DUPLEX RECEPTACLES SHALL BE WHITE, AS ADVISED BY THE ARCHITECT.
7. ALL BRANCH DEVICES SHALL USE A 4" SQUARE STEEL BOX WITH A SINGLE GANG TRIM RING FOR INTERIOR GYPSUM BOARD WALLS. MASONRY BOXES ARE ACCEPTABLE FOR MASONRY WALL INSTALLATION. NON-METALLIC BOXES ARE NOT ACCEPTABLE FOR THIS PROJECT.
8. J-HOOKS AND D-RINGS SHALL BE USED FOR THE LOW-VOLTAGE SYSTEM WIRING INCLUDING BUT NOT LIMITED TO. FIRE ALARM, VOICE, DATA, PA, LIGHTING CONTROL, ETC.
9. USE MINIMUM 1" CONDUIT SIZE FOR VOICE/DATA OUTLET DROPS. EXTEND THE CONDUIT TO THE ADJACENT CORRIDOR ACCESSIBLE CEILING SPACE.
10. MC CABLE IS ONLY ACCEPTABLE FOR FINAL LIGHT FIXTURE CONNECTIONS ABOVE THE LAY-IN CEILING ON THIS PROJECT, UNLESS SPECIFICALLY NOTED.
11. ELECTRICAL CONTRACTOR SHALL FURNISH AND INSTALL CAT6 CABLING BACK TO LOCAL DATA RACK. PROVIDE ALL TERMINATION JACKS AND FACEPLATES.

STATE OF MICHIGAN
August 28, 2026
MAI #2026-01014

KEY PLAN

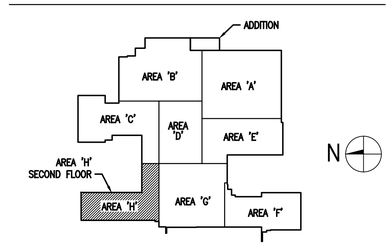

MACMILLAN ASSOCIATES
CONSULTING ENGINEERS
714 EAST MIDLAND STREET • BAY CITY, MICHIGAN 48706
(989) 894-4300 F (989) 894-9930 WWW.MACMILLANASSOCIATES.COM

MARQUETTE OFFICE:
1021 W. BARGA AVENUE
MARQUETTE, MI 49855
PHONE: (906)228-4493
FAX: (906)228-7524

BRIGHTON OFFICE:
8011 W. GRAND RIVER AVE., SUITE 600
BRIGHTON, MI 48116
PHONE: (810)229-2701
FAX: (810)229-8787

INTEGRATED DESIGNS INC.
ARCHITECTURE
ENGINEERING
CONSULTING

HARBOR BEACH PUBLIC SCHOOLS
PHASE 1 - 2026 ADDITION & RENOVATIONS
HARBOR BEACH, MICHIGAN
PROJECT NO. 24-128

NO.	REVISIONS	DATE
0	FOR CONSTRUCTION	08/28/26

	BY	DATE
DESIGN	BS	08/28/26
DRAWN	RLM	08/28/26
CHECKED	BS	08/28/26
APPROVED	JWF	08/28/26

FLOOR PLAN AREA 'H' - POWER AND SYSTEMS

COPYRIGHT © 2025 INTEGRATED DESIGNS INC.

E3.6

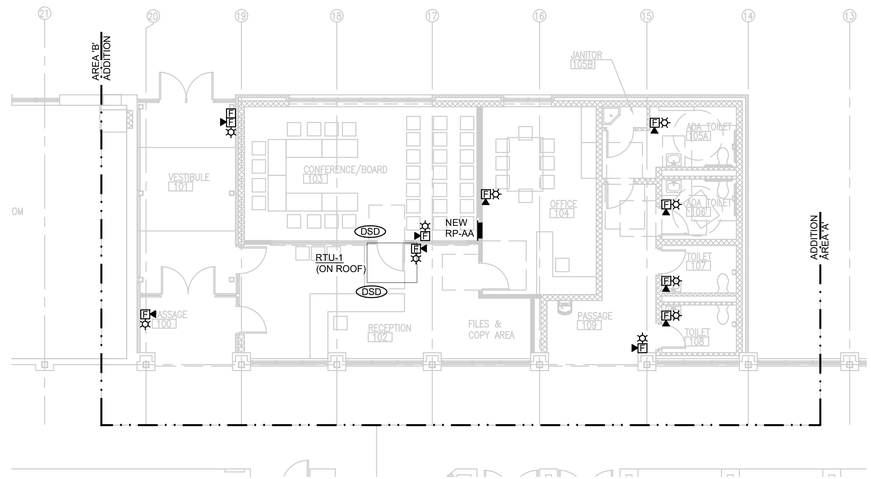

FIRST FLOOR PLAN 'ADDITION' - FIRE ALARM
1/8" = 1'-0"

FIRE ALARM GENERAL NOTES (PART OF DIV 26000 SCOPE OF WORK)

1. INSTALL NEW FIRE ALARM DEVICES AT LOCATIONS SHOWN.
2. PROVIDE ANY RECONFIGURATION, PROGRAMMING AND COMMISSIONING OF THE FIRE ALARM EQUIPMENT.
3. PROVIDE ALL BFS/LARA DOCUMENTATION REQUIRED INCLUDING THE BFS-12A FORM.
4. ELECTRICAL CONTRACTOR SHALL VERIFY EXISTING FIRE ALARM WIRING PRIOR TO DEMOLITION TO THEN REWIRE SYSTEM AS NEEDED.

FIRE ALARM WIRING METHODS

1. FIRE ALARM WIRING INSTALLED ABOVE THE FINISHED CEILING IS ACCEPTABLE TO USE THE FREE-AIR METHOD. USE "J" HOOKS OR "D" RINGS FOR SUPPORT METHODS. PROVIDE PLENUM RATED CABLE FOR THE ENTIRE PROJECT.
2. FIRE ALARM DEVICE MOUNTING HEIGHTS SHALL BE INSTALLED IN ACCORDANCE WITH NFPA 72 NATIONAL FIRE ALARM CODE, BUREAU OF FIRE SERVICES, MICHIGAN BARRIER FREE DESIGN MANUAL AND OTHER APPLICABLE CODES. MOUNTING HEIGHT REQUIREMENTS:

   · WALL MOUNTED AUDIO/VISUAL UNITS SHALL BE MOUNTED SUCH THAT THE ENTIRE LENS IS NOT LESS THAN 80" AND NOT GREATER THAN 96" ABOVE THE FINISHED FLOOR. CEILING MOUNTED DEVICES ARE ACCEPTABLE AND ARE NOTED ON THE DRAWINGS.

   · MANUAL PULL STATIONS SHALL BE MOUNTED 48" MAXIMUM TO THE TOP OF BOX FROM THE FINISHED FLOOR.
3. ALL BRANCH DEVICES SHALL USE A 4" SQUARE STEEL BOX WITH A SINGLE GANG TRIM RING FOR INTERIOR GYPSUM BOARD WALLS. MASONRY BOXES ARE ACCEPTABLE FOR MASONRY WALL INSTALLATION. NON-METALLIC BOXES ARE NOT ACCEPTABLE FOR THIS PROJECT.
4. J-HOOKS AND D-RINGS SHALL BE USED FOR THE LOW-VOLTAGE SYSTEM WIRING INCLUDING BUT NOT LIMITED TO: FIRE ALARM, VOICE, DATA, PA, LIGHTING CONTROL, ETC.
5. ALL DEVICES SHOWN, THE DESIGN INTENT IS TO REUSE THE EXISTING ROUGH-IN. FURNISH AND INSTALL NEW WIREMOLD TO EXISTING DEVICES IF EXISTING RACEWAYS ARE NOT FUNCTIONAL.
6. DUE TO THE REMOVAL OF THE EXISTING SYSTEM DURING INSTALLATION OF NEW, THE OWNER SHALL COORDINATE WITH THE FIRE MARSHALL TO PROVIDE FIRE WATCH AS REQUIRED.
7. ALL NEW DEVICES SHALL BE DENOTED BY KEYED NOTE.

STATE OF MICHIGAN
August 28, 2026
MAI #2026-01014

KEY PLAN

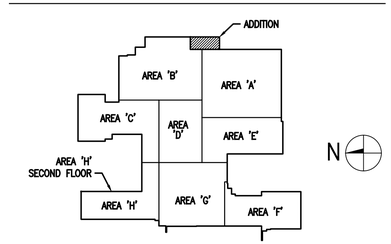

MACMILLAN ASSOCIATES
CONSULTING ENGINEERS
714 EAST MIDLAND STREET • BAY CITY, MICHIGAN 48706
(989) 894-4300 F (989) 894-9930 WWW.MACMILLANASSOCIATES.COM

MARQUETTE OFFICE:
1021 W. BARGA AVENUE
MARQUETTE, MI 49855
PHONE: (906)228-4480
FAX: (906)228-7524
BRIGHTON OFFICE:
8011 W. GRAND RIVER AVE., SUITE 600
BRIGHTON, MI 48116
PHONE: (810)229-2701
FAX: (810)229-4787

ARCHITECTURE ENGINEERING CONSULTING
INTEGRATED DESIGNS INC.

HARBOR BEACH PUBLIC SCHOOLS
PHASE 1 - 2026 ADDITION & RENOVATIONS
HARBOR BEACH, MICHIGAN
PROJECT NO. 24-128

	BY	DATE
DESIGN	BS	08/28/26
DRAWN	RLM	08/28/26
CHECKED	BS	08/28/26
APPROVED	JWF	08/28/26

NO.	REVISIONS	DATE
0	FOR CONSTRUCTION	08/28/26

FIRST FLOOR PLAN ADDITION-
FIRE ALARM

COPYRIGHT © 2025 INTEGRATED DESIGNS INC.

E4.1

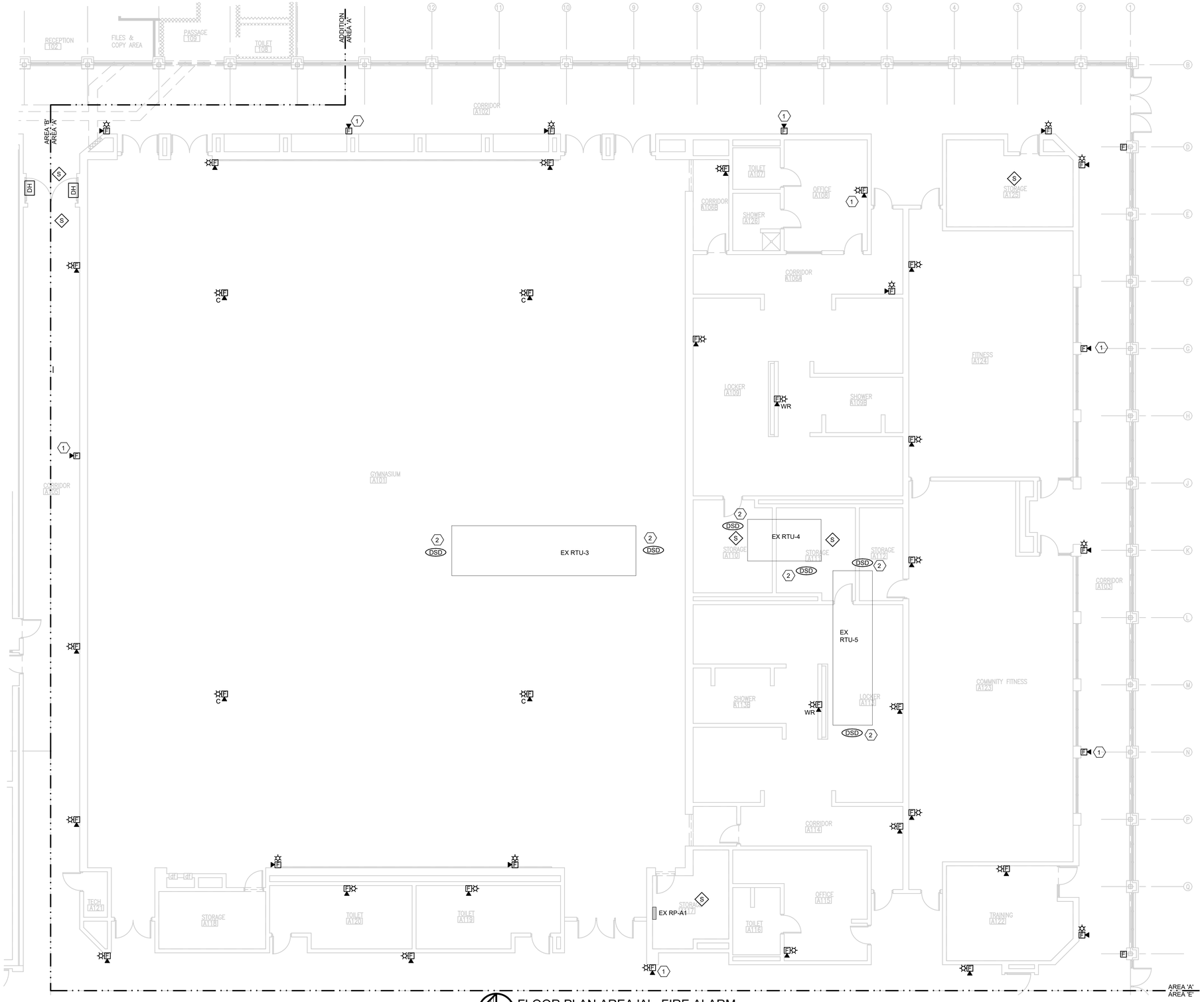

FLOOR PLAN AREA 'A' - FIRE ALARM
1/8"=1'-0"

FIRE ALARM GENERAL NOTES (PART OF DIV 26000 SCOPE OF WORK)

1. INSTALL NEW FIRE ALARM DEVICES AT LOCATIONS SHOWN.
2. PROVIDE ANY RECONFIGURATION, PROGRAMMING AND COMMISSIONING OF THE FIRE ALARM EQUIPMENT.
3. PROVIDE ALL BFS/LARA DOCUMENTATION REQUIRED INCLUDING THE BFS-12A FORM.
4. ELECTRICAL CONTRACTOR SHALL VERIFY EXISTING FIRE ALARM WIRING PRIOR TO DEMOLITION TO THEN REWIRE SYSTEM AS NEEDED.

FIRE ALARM WIRING METHODS

1. FIRE ALARM WIRING INSTALLED ABOVE THE FINISHED CEILING IS ACCEPTABLE TO USE THE FREE-AIR METHOD. USE "J" HOOKS OR "D" RINGS FOR SUPPORT METHODS. PROVIDE PLENUM RATED CABLE FOR THE ENTIRE PROJECT.
2. FIRE ALARM DEVICE MOUNTING HEIGHTS SHALL BE INSTALLED IN ACCORDANCE WITH NFPA 72 NATIONAL FIRE ALARM CODE, BUREAU OF FIRE SERVICES, MICHIGAN BARRIER FREE DESIGN MANUAL AND OTHER APPLICABLE CODES. MOUNTING HEIGHT REQUIREMENTS:

   · WALL MOUNTED AUDIO/VISUAL UNITS SHALL BE MOUNTED SUCH THAT THE ENTIRE LENS IS NOT LESS THAN 80" AND NOT GREATER THAN 96" ABOVE THE FINISHED FLOOR. CEILING MOUNTED DEVICES ARE ACCEPTABLE AND ARE NOTED ON THE DRAWINGS.

   · MANUAL PULL STATIONS SHALL BE MOUNTED 48" MAXIMUM TO THE TOP OF BOX FROM THE FINISHED FLOOR.
3. ALL BRANCH DEVICES SHALL USE A 4" SQUARE STEEL BOX WITH A SINGLE GANG TRIM RING FOR INTERIOR GYPSUM BOARD WALLS. MASONRY BOXES ARE ACCEPTABLE FOR MASONRY WALL INSTALLATION. NON-METALLIC BOXES ARE NOT ACCEPTABLE FOR THIS PROJECT.
4. J-HOOKS AND D-RINGS SHALL BE USED FOR THE LOW-VOLTAGE SYSTEM WIRING INCLUDING BUT NOT LIMITED TO: FIRE ALARM, VOICE, DATA, PA, LIGHTING CONTROL, ETC.
5. ALL DEVICES SHOWN, THE DESIGN INTENT IS TO REUSE THE EXISTING ROUGH-IN. FURNISH AND INSTALL NEW WIREMOLD TO EXISTING DEVICES IF EXISTING RACEWAYS ARE NOT FUNCTIONAL.
6. DUE TO THE REMOVAL OF THE EXISTING SYSTEM DURING INSTALLATION OF NEW, THE OWNER SHALL COORDINATE WITH THE FIRE MARSHALL TO PROVIDE FIRE WATCH AS REQUIRED.
7. ALL NEW DEVICES SHALL BE DENOTED BY KEYED NOTE.

KEYED NOTES

1. FURNISH AND INSTALL NEW SURFACE MOUNTED JUNCTION BOX AND WIRE MOLD FOR NEW FIRE ALARM DEVICE INSTALLED ON THE WALL. PAINT TO MATCH THE EXISTING CONDITIONS.
2. FURNISH AND INSTALL NEW DUCT SMOKE DETECTORS IN THE EXISTING MECHANICAL UNIT AS A PART OF THE NEW FIRE ALARM SYSTEM.

STATE OF MICHIGAN
August 28, 2026
MAI #2026-01014

KEY PLAN

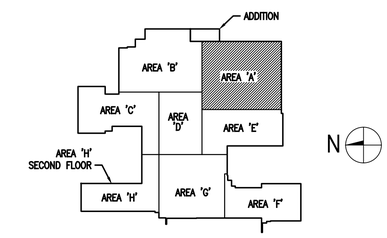

MACMILLAN ASSOCIATES
CONSULTING ENGINEERS
714 EAST MIDLAND STREET • BAY CITY, MICHIGAN 48706
(989) 894-4300 F (989) 894-9930 WWW.MACMILLANASSOCIATES.COM

MARQUETTE OFFICE:
1021 W. BARGA AVENUE
MARQUETTE, MI 49855
PHONE: (906)228-4480
FAX: (906)228-7524
BRIGHTON OFFICE:
8011 W. GRAND RIVER AVE., SUITE 600
BRIGHTON, MI 48116
PHONE: (810)229-2701
FAX: (810)229-6787

ARCHITECTURE ENGINEERING CONSULTING
INTEGRATED DESIGNS INC.

HARBOR BEACH PUBLIC SCHOOLS
PHASE 1 - 2026 ADDITION & RENOVATIONS
HARBOR BEACH, MICHIGAN
PROJECT NO. 24-128

NO	REVISIONS	DATE
0	FOR CONSTRUCTION	08/28/26

	BY	DATE
DESIGN	BS	08/28/26
DRAWN	RLM	08/28/26
CHECKED	BS	08/28/26
APPROVED	JWF	08/28/26

FLOOR PLAN AREA 'A' - FIRE ALARM

COPYRIGHT © 2025 INTEGRATED DESIGNS INC.

E4.2

FLOOR PLAN AREA 'B' - FIRE ALARM
1/8"=1'-0"

FIRE ALARM GENERAL NOTES (PART OF DIV 26000 SCOPE OF WORK)

1. INSTALL NEW FIRE ALARM DEVICES AT LOCATIONS SHOWN.
2. PROVIDE ANY RECONFIGURATION, PROGRAMMING AND COMMISSIONING OF THE FIRE ALARM EQUIPMENT.
3. PROVIDE ALL BFS/LARA DOCUMENTATION REQUIRED INCLUDING THE BFS-12A FORM.
4. ELECTRICAL CONTRACTOR SHALL VERIFY EXISTING FIRE ALARM WIRING PRIOR TO DEMOLITION TO THEN REWIRE SYSTEM AS NEEDED.

FIRE ALARM WIRING METHODS

1. FIRE ALARM WIRING INSTALLED ABOVE THE FINISHED CEILING IS ACCEPTABLE TO USE THE FREE-AIR METHOD. USE "J" HOOKS OR "D" RINGS FOR SUPPORT METHODS. PROVIDE PLENUM RATED CABLE FOR THE ENTIRE PROJECT.
2. FIRE ALARM DEVICE MOUNTING HEIGHTS SHALL BE INSTALLED IN ACCORDANCE WITH NFPA 72 NATIONAL FIRE ALARM CODE, BUREAU OF FIRE SERVICES, MICHIGAN BARRIER FREE DESIGN MANUAL AND OTHER APPLICABLE CODES. MOUNTING HEIGHT REQUIREMENTS:

   · WALL MOUNTED AUDIO/VISUAL UNITS SHALL BE MOUNTED SUCH THAT THE ENTIRE LENS IS NOT LESS THAN 80" AND NOT GREATER THAN 96" ABOVE THE FINISHED FLOOR. CEILING MOUNTED DEVICES ARE ACCEPTABLE AND ARE NOTED ON THE DRAWINGS.

   · MANUAL PULL STATIONS SHALL BE MOUNTED 48" MAXIMUM TO THE TOP OF BOX FROM THE FINISHED FLOOR.
3. ALL BRANCH DEVICES SHALL USE A 4" SQUARE STEEL BOX WITH A SINGLE GANG TRIM RING FOR INTERIOR GYPSUM BOARD WALLS. MASONRY BOXES ARE ACCEPTABLE FOR MASONRY WALL INSTALLATION. NON-METALLIC BOXES ARE NOT ACCEPTABLE FOR THIS PROJECT.
4. J-HOOKS AND D-RINGS SHALL BE USED FOR THE LOW-VOLTAGE SYSTEM WIRING INCLUDING BUT NOT LIMITED TO: FIRE ALARM, VOICE, DATA, PA, LIGHTING CONTROL, ETC.
5. ALL DEVICES SHOWN, THE DESIGN INTENT IS TO REUSE THE EXISTING ROUGH-IN. FURNISH AND INSTALL NEW WIREMOLD TO EXISTING DEVICES IF EXISTING RACEWAYS ARE NOT FUNCTIONAL.
6. DUE TO THE REMOVAL OF THE EXISTING SYSTEM DURING INSTALLATION OF NEW, THE OWNER SHALL COORDINATE WITH THE FIRE MARSHALL TO PROVIDE FIRE WATCH AS REQUIRED.
7. ALL NEW DEVICES SHALL BE DENOTED BY KEYED NOTE.

KEYED NOTES

1. FURNISH AND INSTALL NEW SURFACE MOUNTED JUNCTION BOX AND WIRE MOLD FOR NEW FIRE ALARM DEVICE INSTALLED ON THE WALL. PAINT TO MATCH THE EXISTING CONDITIONS.
2. NEW FIRE ALARM REMOTE ANNUNICIATOR. FURNISH AND INSTALL NEW CUSTOM STEEL PLATE TO COVER EXISTING OPENING. PAINT TO MATCH EXISTING CONDITIONS.
3. FURNISH AND INSTALL NEW DUCT SMOKE DETECTORS IN THE EXISTING MECHANICAL UNIT AS A PART OF THE NEW FIRE ALARM SYSTEM.

STATE OF MICHIGAN
JAMES V. FIFE
LICENSED PROFESSIONAL ENGINEER
August 28, 2026
MAI #2026-01014

KEY PLAN

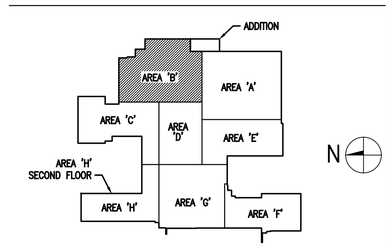

MACMILLAN ASSOCIATES
CONSULTING ENGINEERS
714 EAST MIDLAND STREET • BAY CITY, MICHIGAN 48706
(989) 894-4300 F (989) 894-9930 WWW.MACMILLANASSOCIATES.COM

MARQUETTE OFFICE:
1021 W. BARGA AVENUE
MARQUETTE, MI 49855
PHONE: (906)228-4680
FAX: (906)228-7524
BRIGHTON OFFICE:
8011 W. GRAND RIVER AVE., SUITE 600
BRIGHTON, MI 48116
PHONE: (810)229-2701
FAX: (810)229-4787

ARCHITECTURE ENGINEERING CONSULTING
INTEGRATED DESIGNS INC.

HARBOR BEACH PUBLIC SCHOOLS
PHASE 1 - 2026 ADDITION & RENOVATIONS
HARBOR BEACH, MICHIGAN
PROJECT NO. 24-128

NO.	REVISIONS	DATE
0	FOR CONSTRUCTION	08/28/26

	BY	DATE
DESIGN	BS	08/28/26
DRAWN	RLM	08/28/26
CHECKED	BS	08/28/26
APPROVED	JWF	08/28/26

FLOOR PLAN AREA 'B' - FIRE ALARM

COPYRIGHT © 2025 INTEGRATED DESIGNS INC.

E4.3

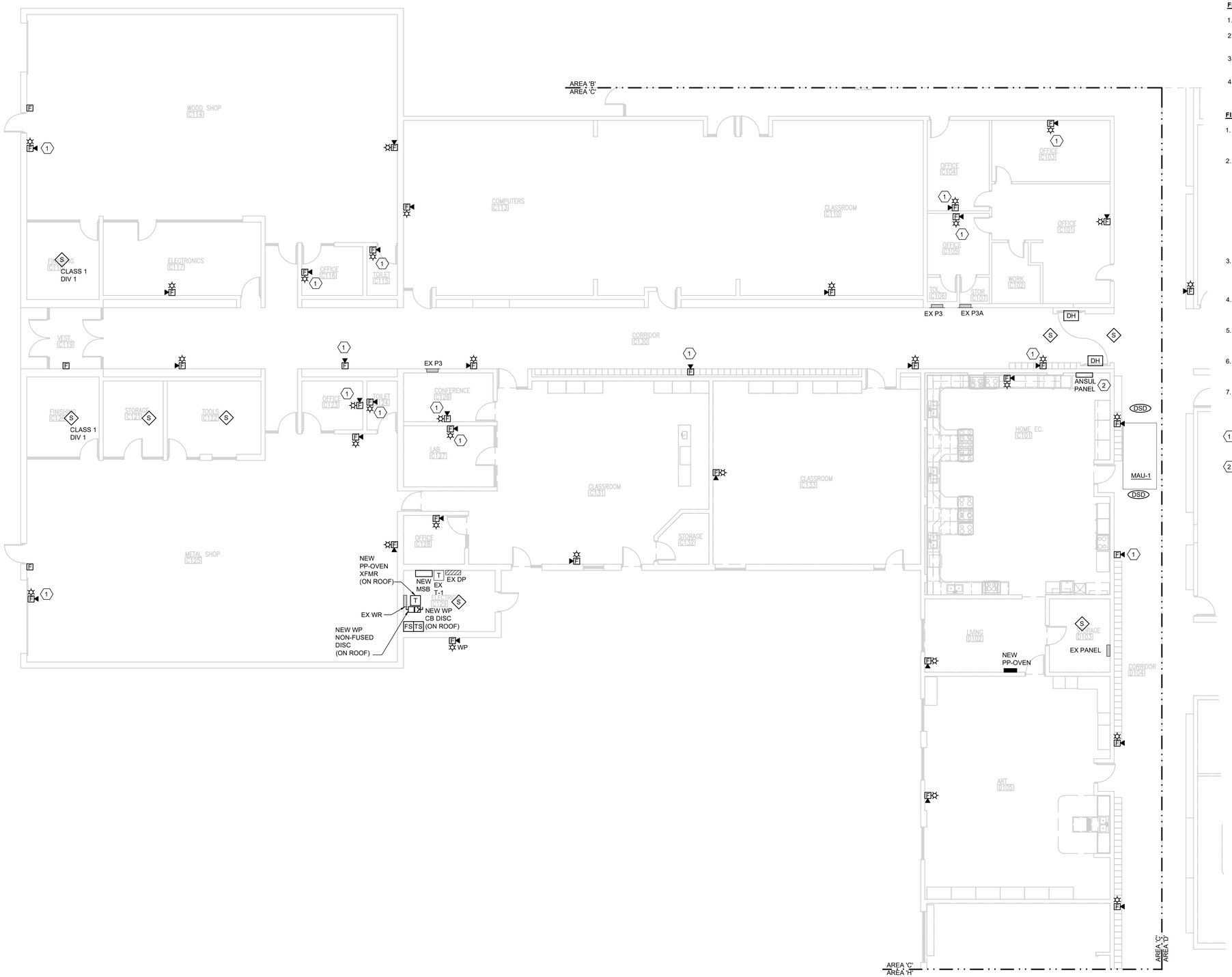

FLOOR PLAN AREA 'C' - FIRE ALARM

1/8"=1'-0"

FIRE ALARM GENERAL NOTES (PART OF DIV 26000 SCOPE OF WORK)

1. INSTALL NEW FIRE ALARM DEVICES AT LOCATIONS SHOWN.
2. PROVIDE ANY RECONFIGURATION, PROGRAMMING AND COMMISSIONING OF THE FIRE ALARM EQUIPMENT.
3. PROVIDE ALL BFS/LARA DOCUMENTATION REQUIRED INCLUDING THE BFS-12A FORM.
4. ELECTRICAL CONTRACTOR SHALL VERIFY EXISTING FIRE ALARM WIRING PRIOR TO DEMOLITION TO THEN REWIRE SYSTEM AS NEEDED.

FIRE ALARM WIRING METHODS

1. FIRE ALARM WIRING INSTALLED ABOVE THE FINISHED CEILING IS ACCEPTABLE TO USE THE FREE-AIR METHOD. USE "J" HOOKS OR "D" RINGS FOR SUPPORT METHODS. PROVIDE PLENUM RATED CABLE FOR THE ENTIRE PROJECT.
2. FIRE ALARM DEVICE MOUNTING HEIGHTS SHALL BE INSTALLED IN ACCORDANCE WITH NFPA 72 NATIONAL FIRE ALARM CODE, BUREAU OF FIRE SERVICES, MICHIGAN BARRIER FREE DESIGN MANUAL AND OTHER APPLICABLE CODES. MOUNTING HEIGHT REQUIREMENTS:

   · WALL MOUNTED AUDIO/VISUAL UNITS SHALL BE MOUNTED SUCH THAT THE ENTIRE LENS IS NOT LESS THAN 80" AND NOT GREATER THAN 96" ABOVE THE FINISHED FLOOR. CEILING MOUNTED DEVICES ARE ACCEPTABLE AND ARE NOTED ON THE DRAWINGS.

   · MANUAL PULL STATIONS SHALL BE MOUNTED 48" MAXIMUM TO THE TOP OF BOX FROM THE FINISHED FLOOR.
3. ALL BRANCH DEVICES SHALL USE A 4" SQUARE STEEL BOX WITH A SINGLE GANG TRIM RING FOR INTERIOR GYPSUM BOARD WALLS. MASONRY BOXES ARE ACCEPTABLE FOR MASONRY WALL INSTALLATION. NON-METALLIC BOXES ARE NOT ACCEPTABLE FOR THIS PROJECT.
4. J-HOOKS AND D-RINGS SHALL BE USED FOR THE LOW-VOLTAGE SYSTEM WIRING INCLUDING BUT NOT LIMITED TO: FIRE ALARM, VOICE, DATA, PA, LIGHTING CONTROL, ETC.
5. ALL DEVICES SHOWN, THE DESIGN INTENT IS TO REUSE THE EXISTING ROUGH-IN. FURNISH AND INSTALL NEW WIREMOLD TO EXISTING DEVICES IF EXISTING RACEWAYS ARE NOT FUNCTIONAL.
6. DUE TO THE REMOVAL OF THE EXISTING SYSTEM DURING INSTALLATION OF NEW, THE OWNER SHALL COORDINATE WITH THE FIRE MARSHALL TO PROVIDE FIRE WATCH AS REQUIRED.
7. ALL NEW DEVICES SHALL BE DENOTED BY KEYED NOTE.

KEYED NOTES

1. FURNISH AND INSTALL NEW SURFACE MOUNTED JUNCTION BOX AND WIRE MOLD FOR NEW FIRE ALARM DEVICE INSTALLED ON THE WALL. PAINT TO MATCH THE EXISTING CONDITIONS.
2. ANSUL PANEL. TIE IN THE ANSUL SYSTEM TO THE FIRE ALARM SYSTEM. WIRE PER MANUFACTURERS SPECIFICATIONS.

STATE OF MICHIGAN
JOHN W. MACMILLAN
No. 6201047890
PROFESSIONAL ENGINEER

August 28, 2026
MAI #2026-01014

KEY PLAN

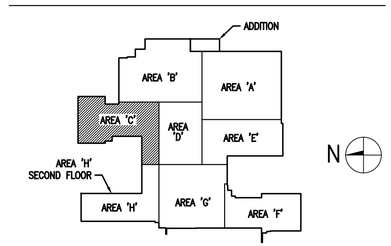

MACMILLAN ASSOCIATES
CONSULTING ENGINEERS
714 EAST MIDLAND STREET • BAY CITY, MICHIGAN 48706
(989) 894-4300 F (989) 894-9930 WWW.MACMILLANASSOCIATES.COM

MARQUETTE OFFICE:
1021 W. BARAGA AVENUE
MARQUETTE, MI 49855
PHONE: (906)228-4693
FAX: (906)228-7524
BRIGHTON OFFICE:
8011 W. GRAND RIVER AVE., SUITE 600
BRIGHTON, MI 48116
PHONE: (810)229-2701
FAX: (810)229-4787

ARCHITECTURE ENGINEERING CONSULTING
INTEGRATED DESIGNS INC.

HARBOR BEACH PUBLIC SCHOOLS
PHASE 1 - 2026 ADDITION & RENOVATIONS
HARBOR BEACH, MICHIGAN
PROJECT NO. 24-128

NO.	REVISIONS	DATE
0	FOR CONSTRUCTION	08/28/26

	BY	DATE
DESIGN	BS	08/28/26
DRAWN	RLM	08/28/26
CHECKED	BS	08/28/26
APPROVED	JWF	08/28/26

FLOOR PLAN AREA 'C' - FIRE ALARM

COPYRIGHT © 2025 INTEGRATED DESIGNS INC.

E4.4

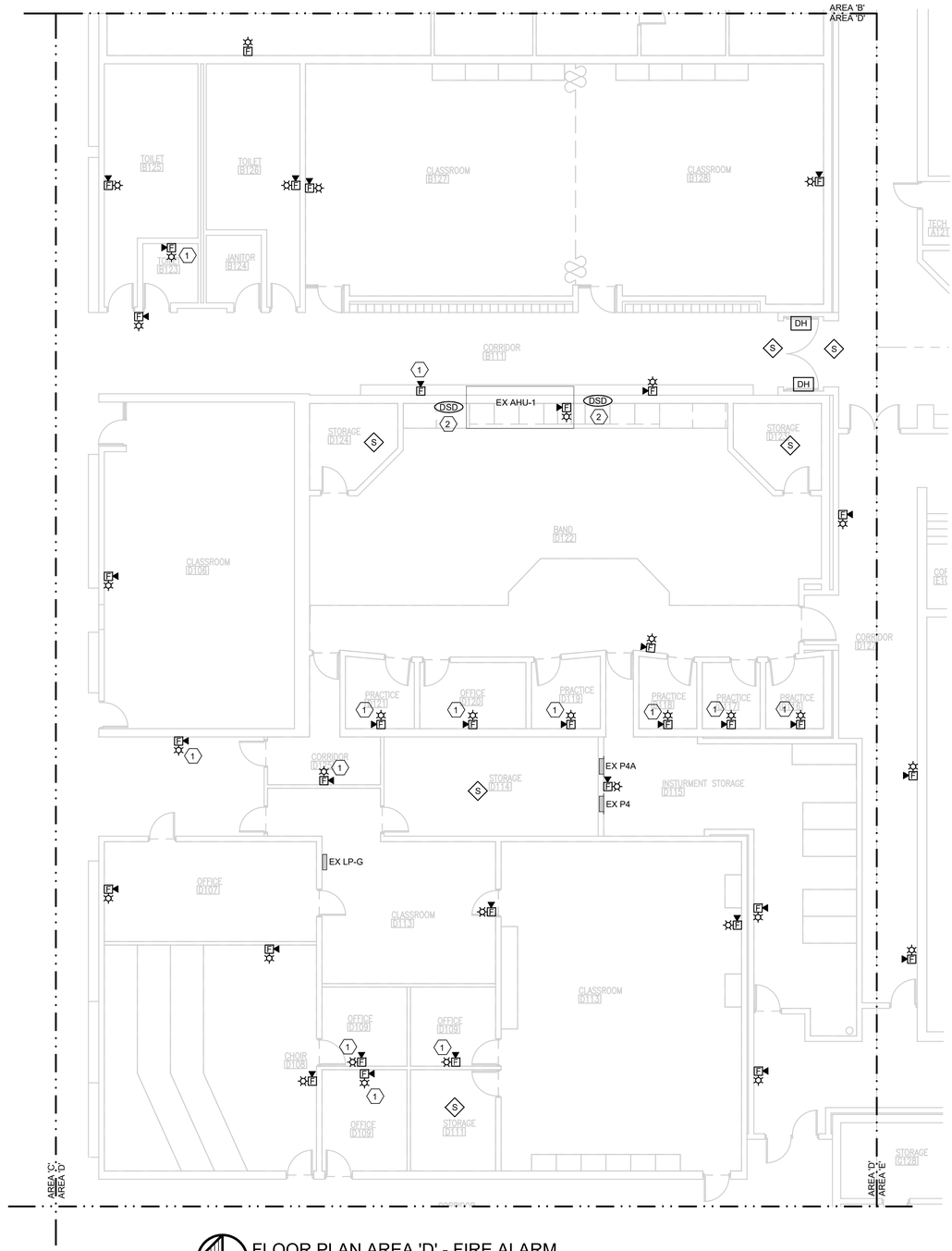

FLOOR PLAN AREA 'D' - FIRE ALARM
1/8"=1'-0"

FIRE ALARM GENERAL NOTES (PART OF DIV 26000 SCOPE OF WORK)

1. INSTALL NEW FIRE ALARM DEVICES AT LOCATIONS SHOWN.
2. PROVIDE ANY RECONFIGURATION, PROGRAMMING AND COMMISSIONING OF THE FIRE ALARM EQUIPMENT.
3. PROVIDE ALL BFS/LARA DOCUMENTATION REQUIRED INCLUDING THE BFS-12A FORM.
4. ELECTRICAL CONTRACTOR SHALL VERIFY EXISTING FIRE ALARM WIRING PRIOR TO DEMOLITION TO THEN REWIRE SYSTEM AS NEEDED.

FIRE ALARM WIRING METHODS

1. FIRE ALARM WIRING INSTALLED ABOVE THE FINISHED CEILING IS ACCEPTABLE TO USE THE FREE-AIR METHOD. USE "J" HOOKS OR "D" RINGS FOR SUPPORT METHODS. PROVIDE PLENUM RATED CABLE FOR THE ENTIRE PROJECT.
2. FIRE ALARM DEVICE MOUNTING HEIGHTS SHALL BE INSTALLED IN ACCORDANCE WITH NFPA 72 NATIONAL FIRE ALARM CODE, BUREAU OF FIRE SERVICES, MICHIGAN BARRIER FREE DESIGN MANUAL AND OTHER APPLICABLE CODES. MOUNTING HEIGHT REQUIREMENTS:

   · WALL MOUNTED AUDIO/VISUAL UNITS SHALL BE MOUNTED SUCH THAT THE ENTIRE LENS IS NOT LESS THAN 80" AND NOT GREATER THAN 96" ABOVE THE FINISHED FLOOR. CEILING MOUNTED DEVICES ARE ACCEPTABLE AND ARE NOTED ON THE DRAWINGS.

   · MANUAL PULL STATIONS SHALL BE MOUNTED 48" MAXIMUM TO THE TOP OF BOX FROM THE FINISHED FLOOR.
3. ALL BRANCH DEVICES SHALL USE A 4" SQUARE STEEL BOX WITH A SINGLE GANG TRIM RING FOR INTERIOR GYPSUM BOARD WALLS. MASONRY BOXES ARE ACCEPTABLE FOR MASONRY WALL INSTALLATION. NON-METALLIC BOXES ARE NOT ACCEPTABLE FOR THIS PROJECT.
4. J-HOOKS AND D-RINGS SHALL BE USED FOR THE LOW-VOLTAGE SYSTEM WIRING INCLUDING BUT NOT LIMITED TO: FIRE ALARM, VOICE, DATA, PA, LIGHTING CONTROL, ETC.
5. ALL DEVICES SHOWN, THE DESIGN INTENT IS TO REUSE THE EXISTING ROUGH-IN. FURNISH AND INSTALL NEW WIREMOLD TO EXISTING DEVICES IF EXISTING RACEWAYS ARE NOT FUNCTIONAL.
6. DUE TO THE REMOVAL OF THE EXISTING SYSTEM DURING INSTALLATION OF NEW, THE OWNER SHALL COORDINATE WITH THE FIRE MARSHALL TO PROVIDE FIRE WATCH AS REQUIRED.
7. ALL NEW DEVICES SHALL BE DENOTED BY KEYED NOTE.

KEYED NOTES

1. FURNISH AND INSTALL NEW SURFACE MOUNTED JUNCTION BOX AND WIRE MOLD FOR NEW FIRE ALARM DEVICE INSTALLED ON THE WALL. PAINT TO MATCH THE EXISTING CONDITIONS.
2. FURNISH AND INSTALL NEW DUCT SMOKE DETECTORS IN THE EXISTING MECHANICAL UNIT AS A PART OF THE NEW FIRE ALARM SYSTEM.

STATE OF MICHIGAN
August 28, 2026
MAI #2026-01014

KEY PLAN

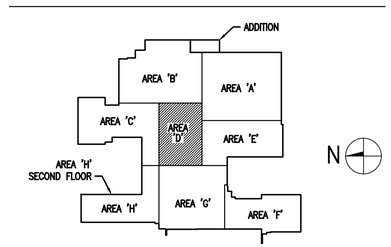

MACMILLAN ASSOCIATES
CONSULTING ENGINEERS
714 EAST MIDLAND STREET • BAY CITY, MICHIGAN 48706
(989) 894-4300 F (989) 894-9930 WWW.MACMILLANASSOCIATES.COM

MARQUETTE OFFICE:
1021 W. BARAGA AVENUE
MARQUETTE, MI 49855
PHONE: (906)228-4660
FAX: (906)228-7524
BRIGHTON OFFICE:
8011 W. GRAND RIVER AVE., SUITE 600
BRIGHTON, MI 48116
PHONE: (810)229-2701
FAX: (810)229-4787

ARCHITECTURE ENGINEERING CONSULTING
INTEGRATED DESIGNS INC.

HARBOR BEACH PUBLIC SCHOOLS
PHASE 1 - 2026 ADDITION & RENOVATIONS
HARBOR BEACH, MICHIGAN
PROJECT NO. 24-128

	BY	DATE
DESIGN	BS	08/28/26
DRAWN	RLM	08/28/26
CHECKED	BS	08/28/26
APPROVED	JWF	08/28/26

NO.	REVISIONS	DATE
0	FOR CONSTRUCTION	08/28/26

FLOOR PLAN AREA 'D' - FIRE ALARM

COPYRIGHT © 2025 INTEGRATED DESIGNS INC.

E4.5

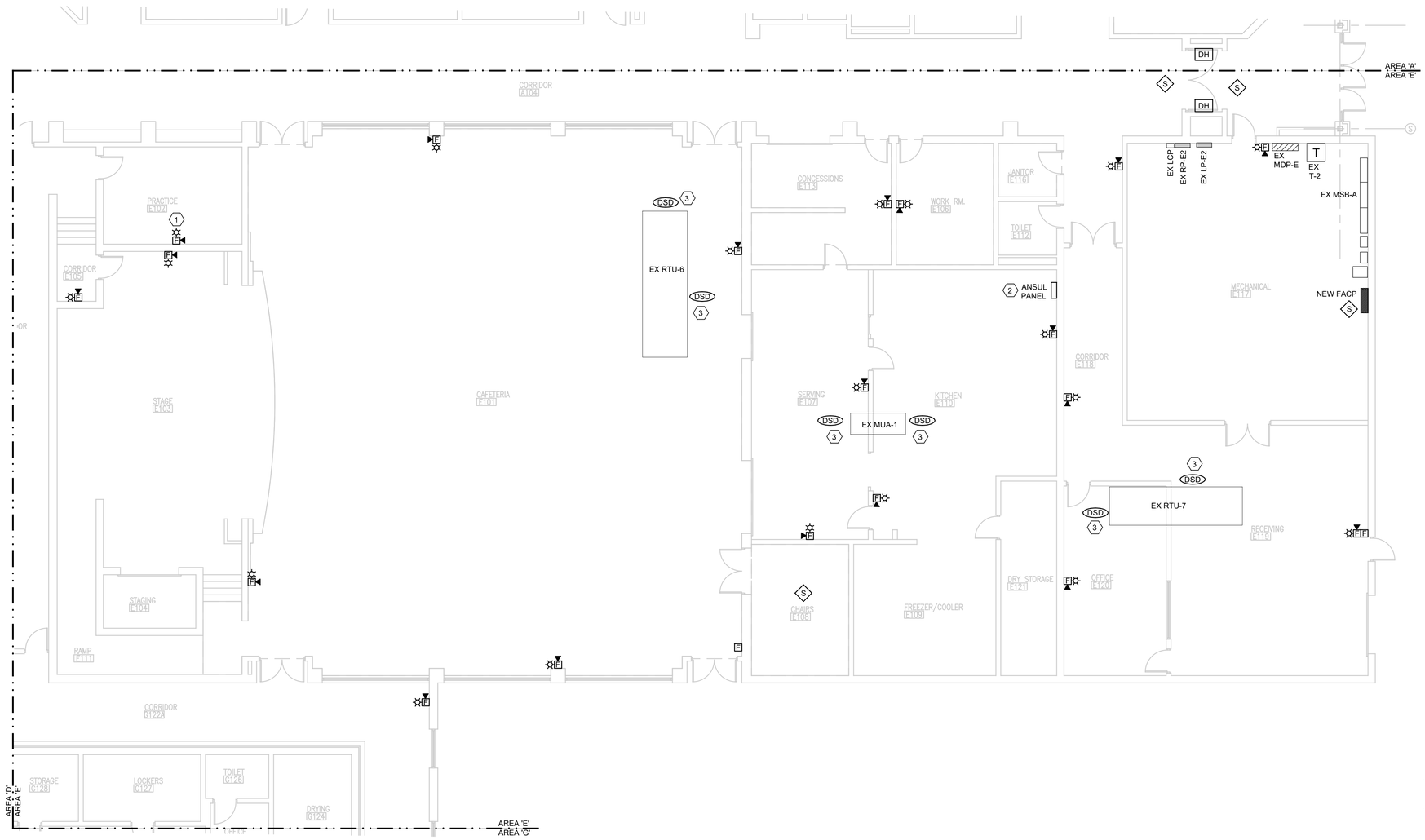

FLOOR PLAN AREA 'E' - FIRE ALARM

1/8"=1'-0"

FIRE ALARM GENERAL NOTES (PART OF DIV 26000 SCOPE OF WORK)

1. INSTALL NEW FIRE ALARM DEVICES AT LOCATIONS SHOWN.
2. PROVIDE ANY RECONFIGURATION, PROGRAMMING AND COMMISSIONING OF THE FIRE ALARM EQUIPMENT.
3. PROVIDE ALL BFS/LARA DOCUMENTATION REQUIRED INCLUDING THE BFS-12A FORM.
4. ELECTRICAL CONTRACTOR SHALL VERIFY EXISTING FIRE ALARM WIRING PRIOR TO DEMOLITION TO THEN REWIRE SYSTEM AS NEEDED.

FIRE ALARM WIRING METHODS

1. FIRE ALARM WIRING INSTALLED ABOVE THE FINISHED CEILING IS ACCEPTABLE TO USE THE FREE-AIR METHOD. USE "J" HOOKS OR "D" RINGS FOR SUPPORT METHODS. PROVIDE PLENUM RATED CABLE FOR THE ENTIRE PROJECT.
2. FIRE ALARM DEVICE MOUNTING HEIGHTS SHALL BE INSTALLED IN ACCORDANCE WITH NFPA 72 NATIONAL FIRE ALARM CODE, BUREAU OF FIRE SERVICES, MICHIGAN BARRIER FREE DESIGN MANUAL AND OTHER APPLICABLE CODES. MOUNTING HEIGHT REQUIREMENTS:
   - WALL MOUNTED AUDIO/VISUAL UNITS SHALL BE MOUNTED SUCH THAT THE ENTIRE LENS IS NOT LESS THAN 80" AND NOT GREATER THAN 96" ABOVE THE FINISHED FLOOR. CEILING MOUNTED DEVICES ARE ACCEPTABLE AND ARE NOTED ON THE DRAWINGS.
   - MANUAL PULL STATIONS SHALL BE MOUNTED 48" MAXIMUM TO THE TOP OF BOX FROM THE FINISHED FLOOR.
3. ALL BRANCH DEVICES SHALL USE A 4" SQUARE STEEL BOX WITH A SINGLE GANG TRIM RING FOR INTERIOR GYPSUM BOARD WALLS. MASONRY BOXES ARE ACCEPTABLE FOR MASONRY WALL INSTALLATION. NON-METALLIC BOXES ARE NOT ACCEPTABLE FOR THIS PROJECT.
4. J-HOOKS AND D-RINGS SHALL BE USED FOR THE LOW-VOLTAGE SYSTEM WIRING INCLUDING BUT NOT LIMITED TO: FIRE ALARM, VOICE, DATA, PA, LIGHTING CONTROL, ETC.
5. ALL DEVICES SHOWN, THE DESIGN INTENT IS TO REUSE THE EXISTING ROUGH-IN. FURNISH AND INSTALL NEW WIREMOLD TO EXISTING DEVICES IF EXISTING RACEWAYS ARE NOT FUNCTIONAL.
6. DUE TO THE REMOVAL OF THE EXISTING SYSTEM DURING INSTALLATION OF NEW, THE OWNER SHALL COORDINATE WITH THE FIRE MARSHALL TO PROVIDE FIRE WATCH AS REQUIRED.
7. ALL NEW DEVICES SHALL BE DENOTED BY KEYED NOTE.

KEYED NOTES

1. FURNISH AND INSTALL NEW SURFACE MOUNTED JUNCTION BOX AND WIRE MOLD FOR NEW FIRE ALARM DEVICE INSTALLED ON THE WALL. PAINT TO MATCH THE EXISTING CONDITIONS.
2. ESTIMATED LOCATION OF EXISTING ANSUL PANEL IN THE EXISTING KITCHEN. TIE IN THE ANSUL SYSTEM TO THE FIRE ALARM SYSTEM. WIRE PER MANUFACTURERS SPECIFICATIONS.
3. FURNISH AND INSTALL NEW DUCT SMOKE DETECTORS IN THE EXISTING MECHANICAL UNIT AS A PART OF THE NEW FIRE ALARM SYSTEM.

STATE OF MICHIGAN
August 28, 2026
MAI #2026-01014

KEY PLAN

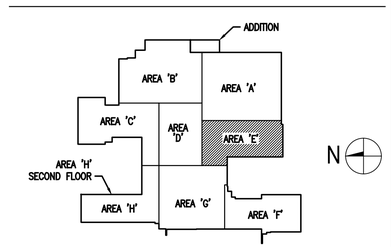

MACMILLAN ASSOCIATES
CONSULTING ENGINEERS
714 EAST MIDLAND STREET • BAY CITY, MICHIGAN 48706
(989) 894-4300 F (989) 894-9930 WWW.MACMILLANASSOCIATES.COM

MARQUETTE OFFICE:
1021 W. BARGA AVENUE
MARQUETTE, MI 49855
PHONE: (906)228-4660
FAX: (906)228-7524
BRIGHTON OFFICE:
8011 W. GRAND RIVER AVE., SUITE 600
BRIGHTON, MI 48116
PHONE: (810)229-2701
FAX: (810)229-4787

ARCHITECTURE ENGINEERING CONSULTING
INTEGRATED DESIGNS INC.

HARBOR BEACH PUBLIC SCHOOLS
PHASE 1 - 2026 ADDITION & RENOVATIONS
HARBOR BEACH, MICHIGAN
PROJECT NO. 24-128

NO.	REVISIONS	DATE
0	FOR CONSTRUCTION	08/28/26

	BY	DATE
DESIGN	BS	08/28/26
DRAWN	RLM	08/28/26
CHECKED	BS	08/28/26
APPROVED	JWF	08/28/26

FLOOR PLAN AREA 'F' - FIRE ALARM

COPYRIGHT © 2025 INTEGRATED DESIGNS INC.

E4.6

FLOOR PLAN AREA 'F' - FIRE ALARM
1/8"=1'-0"

FIRE ALARM GENERAL NOTES (PART OF DIV 26000 SCOPE OF WORK)

1. INSTALL NEW FIRE ALARM DEVICES AT LOCATIONS SHOWN.
2. PROVIDE ANY RECONFIGURATION, PROGRAMMING AND COMMISSIONING OF THE FIRE ALARM EQUIPMENT.
3. PROVIDE ALL BFS/LARA DOCUMENTATION REQUIRED INCLUDING THE BFS-12A FORM.
4. ELECTRICAL CONTRACTOR SHALL VERIFY EXISTING FIRE ALARM WIRING PRIOR TO DEMOLITION TO THEN REWIRE SYSTEM AS NEEDED.

FIRE ALARM WIRING METHODS

1. FIRE ALARM WIRING INSTALLED ABOVE THE FINISHED CEILING IS ACCEPTABLE TO USE THE FREE-AIR METHOD. USE "J" HOOKS OR "D" RINGS FOR SUPPORT METHODS. PROVIDE PLENUM RATED CABLE FOR THE ENTIRE PROJECT.
2. FIRE ALARM DEVICE MOUNTING HEIGHTS SHALL BE INSTALLED IN ACCORDANCE WITH NFPA 72 NATIONAL FIRE ALARM CODE, BUREAU OF FIRE SERVICES, MICHIGAN BARRIER FREE DESIGN MANUAL AND OTHER APPLICABLE CODES. MOUNTING HEIGHT REQUIREMENTS:

   - WALL MOUNTED AUDIO/VISUAL UNITS SHALL BE MOUNTED SUCH THAT THE ENTIRE LENS IS NOT LESS THAN 80" AND NOT GREATER THAN 96" ABOVE THE FINISHED FLOOR. CEILING MOUNTED DEVICES ARE ACCEPTABLE AND ARE NOTED ON THE DRAWINGS.

   - MANUAL PULL STATIONS SHALL BE MOUNTED 48" MAXIMUM TO THE TOP OF BOX FROM THE FINISHED FLOOR.
3. ALL BRANCH DEVICES SHALL USE A 4" SQUARE STEEL BOX WITH A SINGLE GANG TRIM RING FOR INTERIOR GYPSUM BOARD WALLS. MASONRY BOXES ARE ACCEPTABLE FOR MASONRY WALL INSTALLATION. NON-METALLIC BOXES ARE NOT ACCEPTABLE FOR THIS PROJECT.
4. J-HOOKS AND D-RINGS SHALL BE USED FOR THE LOW-VOLTAGE SYSTEM WIRING INCLUDING BUT NOT LIMITED TO: FIRE ALARM, VOICE, DATA, PA, LIGHTING CONTROL, ETC.
5. ALL DEVICES SHOWN, THE DESIGN INTENT IS TO REUSE THE EXISTING ROUGH-IN. FURNISH AND INSTALL NEW WIREMOLD TO EXISTING DEVICES IF EXISTING RACEWAYS ARE NOT FUNCTIONAL.
6. DUE TO THE REMOVAL OF THE EXISTING SYSTEM DURING INSTALLATION OF NEW, THE OWNER SHALL COORDINATE WITH THE FIRE MARSHALL TO PROVIDE FIRE WATCH AS REQUIRED.
7. ALL NEW DEVICES SHALL BE DENOTED BY KEYED NOTE.

KEYED NOTES

1. FURNISH AND INSTALL NEW SURFACE MOUNTED JUNCTION BOX AND WIRE MOLD FOR NEW FIRE ALARM DEVICE INSTALLED ON THE WALL. PAINT TO MATCH THE EXISTING CONDITIONS.
2. FURNISH AND INSTALL NEW DUCT SMOKE DETECTORS IN THE EXISTING MECHANICAL UNIT AS A PART OF THE NEW FIRE ALARM SYSTEM.

STATE OF MICHIGAN
August 28, 2026
MAI #2026-01014

KEY PLAN

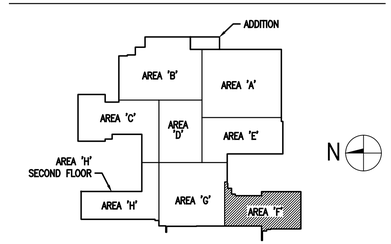

MACMILLAN ASSOCIATES
CONSULTING ENGINEERS
714 EAST MIDLAND STREET • BAY CITY, MICHIGAN 48706
(989) 894-4300 F (989) 894-9930 WWW.MACMILLANASSOCIATES.COM

MARQUETTE OFFICE:
1021 W. BARAGA AVENUE
MARQUETTE, MI 49855
PHONE: (906)228-7524
FAX: (906)228-7524
BRIGHTON OFFICE:
8011 W. GRAND RIVER AVE., SUITE 600
BRIGHTON, MI 48116
PHONE: (810)229-2701
FAX: (810)229-8787
INTEGRATED DESIGNS INC.
ARCHITECTURE
ENGINEERING
CONSULTING

HARBOR BEACH PUBLIC SCHOOLS
PHASE 1 - 2026 ADDITION & RENOVATIONS
HARBOR BEACH, MICHIGAN
PROJECT NO. 24-128

NO.	REVISIONS	DATE
0	FOR CONSTRUCTION	08/28/26

	BY	DATE
DESIGN	BS	08/28/26
DRAWN	RLM	08/28/26
CHECKED	BS	08/28/26
APPROVED	JWF	08/28/26

FLOOR PLAN AREA 'F' - FIRE ALARM

COPYRIGHT © 2025 INTEGRATED DESIGNS INC.

E4.7

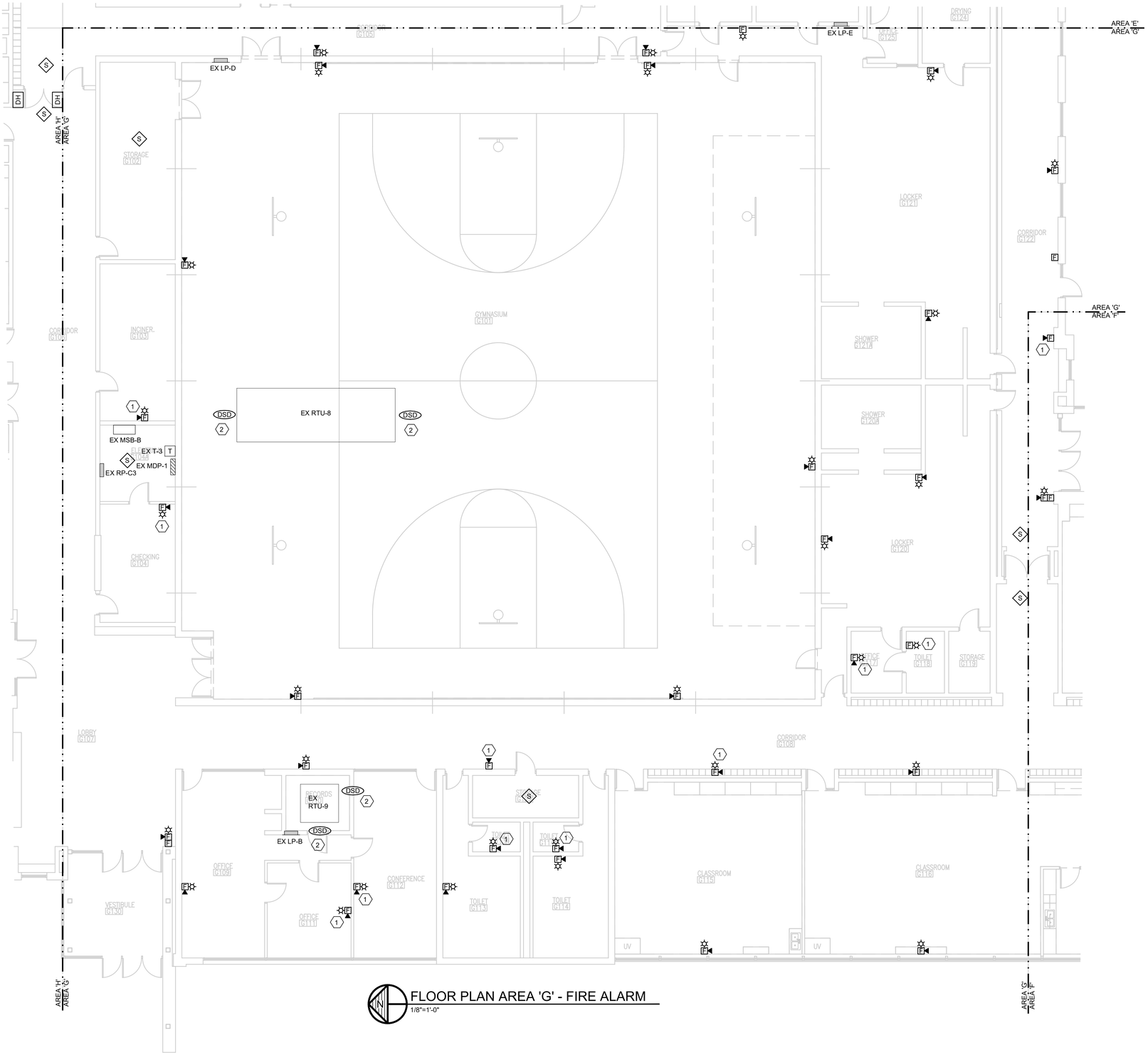

FLOOR PLAN AREA 'G' - FIRE ALARM

1/8"=1'-0"

FIRE ALARM GENERAL NOTES (PART OF DIV 26000 SCOPE OF WORK)

1. INSTALL NEW FIRE ALARM DEVICES AT LOCATIONS SHOWN.
2. PROVIDE ANY RECONFIGURATION, PROGRAMMING AND COMMISSIONING OF THE FIRE ALARM EQUIPMENT.
3. PROVIDE ALL BFS/LARA DOCUMENTATION REQUIRED INCLUDING THE BFS-12A FORM.
4. ELECTRICAL CONTRACTOR SHALL VERIFY EXISTING FIRE ALARM WIRING PRIOR TO DEMOLITION TO THEN REWIRE SYSTEM AS NEEDED.

FIRE ALARM WIRING METHODS

1. FIRE ALARM WIRING INSTALLED ABOVE THE FINISHED CEILING IS ACCEPTABLE TO USE THE FREE-AIR METHOD. USE "J" HOOKS OR "D" RINGS FOR SUPPORT METHODS. PROVIDE PLENUM RATED CABLE FOR THE ENTIRE PROJECT.
2. FIRE ALARM DEVICE MOUNTING HEIGHTS SHALL BE INSTALLED IN ACCORDANCE WITH NFPA 72 NATIONAL FIRE ALARM CODE, BUREAU OF FIRE SERVICES, MICHIGAN BARRIER FREE DESIGN MANUAL AND OTHER APPLICABLE CODES. MOUNTING HEIGHT REQUIREMENTS:

   · WALL MOUNTED AUDIO/VISUAL UNITS SHALL BE MOUNTED SUCH THAT THE ENTIRE LENS IS NOT LESS THAN 80" AND NOT GREATER THAN 96" ABOVE THE FINISHED FLOOR. CEILING MOUNTED DEVICES ARE ACCEPTABLE AND ARE NOTED ON THE DRAWINGS.

   · MANUAL PULL STATIONS SHALL BE MOUNTED 48" MAXIMUM TO THE TOP OF BOX FROM THE FINISHED FLOOR.
3. ALL BRANCH DEVICES SHALL USE A 4" SQUARE STEEL BOX WITH A SINGLE GANG TRIM RING FOR INTERIOR GYPSUM BOARD WALLS. MASONRY BOXES ARE ACCEPTABLE FOR MASONRY WALL INSTALLATION. NON-METALLIC BOXES ARE NOT ACCEPTABLE FOR THIS PROJECT.
4. J-HOOKS AND D-RINGS SHALL BE USED FOR THE LOW-VOLTAGE SYSTEM WIRING INCLUDING BUT NOT LIMITED TO: FIRE ALARM, VOICE, DATA, PA, LIGHTING CONTROL, ETC.
5. ALL DEVICES SHOWN, THE DESIGN INTENT IS TO REUSE THE EXISTING ROUGH-IN. FURNISH AND INSTALL NEW WIREMOLD TO EXISTING DEVICES IF EXISTING RACEWAYS ARE NOT FUNCTIONAL.
6. DUE TO THE REMOVAL OF THE EXISTING SYSTEM DURING INSTALLATION OF NEW, THE OWNER SHALL COORDINATE WITH THE FIRE MARSHALL TO PROVIDE FIRE WATCH AS REQUIRED.
7. ALL NEW DEVICES SHALL BE DENOTED BY KEYED NOTE.

KEYED NOTES

1. FURNISH AND INSTALL NEW SURFACE MOUNTED JUNCTION BOX AND WIRE MOLD FOR NEW FIRE ALARM DEVICE INSTALLED ON THE WALL. PAINT TO MATCH THE EXISTING CONDITIONS.
2. FURNISH AND INSTALL NEW DUCT SMOKE DETECTORS IN THE EXISTING MECHANICAL UNIT AS A PART OF THE NEW FIRE ALARM SYSTEM.

STATE OF MICHIGAN
August 28, 2026
MAI #2026-01014

KEY PLAN

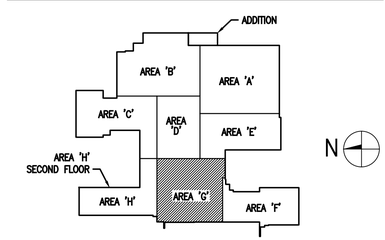

MACMILLAN ASSOCIATES
CONSULTING ENGINEERS
714 EAST MIDLAND STREET • BAY CITY, MICHIGAN 48706
(989) 894-4300 F (989) 894-9930 WWW.MACMILLANASSOCIATES.COM

MARQUETTE OFFICE:
1021 W. BARGA AVENUE
MARQUETTE, MI 49855
PHONE: (906)228-4693
FAX: (906)228-7524
BRIGHTON OFFICE:
8011 W. GRAND RIVER AVE., SUITE 600
BRIGHTON, MI 48116
PHONE: (810)229-2701
FAX: (810)229-8787

ARCHITECTURE ENGINEERING CONSULTING
INTEGRATED DESIGNS INC.

HARBOR BEACH PUBLIC SCHOOLS
PHASE 1 - 2026 ADDITION & RENOVATIONS
HARBOR BEACH, MICHIGAN
PROJECT NO. 24-128

NO.	REVISIONS	DATE
0	FOR CONSTRUCTION	08/28/26

	BY	DATE
DESIGN	BS	08/28/26
DRAWN	RLM	08/28/26
CHECKED	BS	08/28/26
APPROVED	JWF	08/28/26

FLOOR PLAN AREA 'G' - FIRE ALARM

COPYRIGHT © 2025 INTEGRATED DESIGNS INC.

E4.8

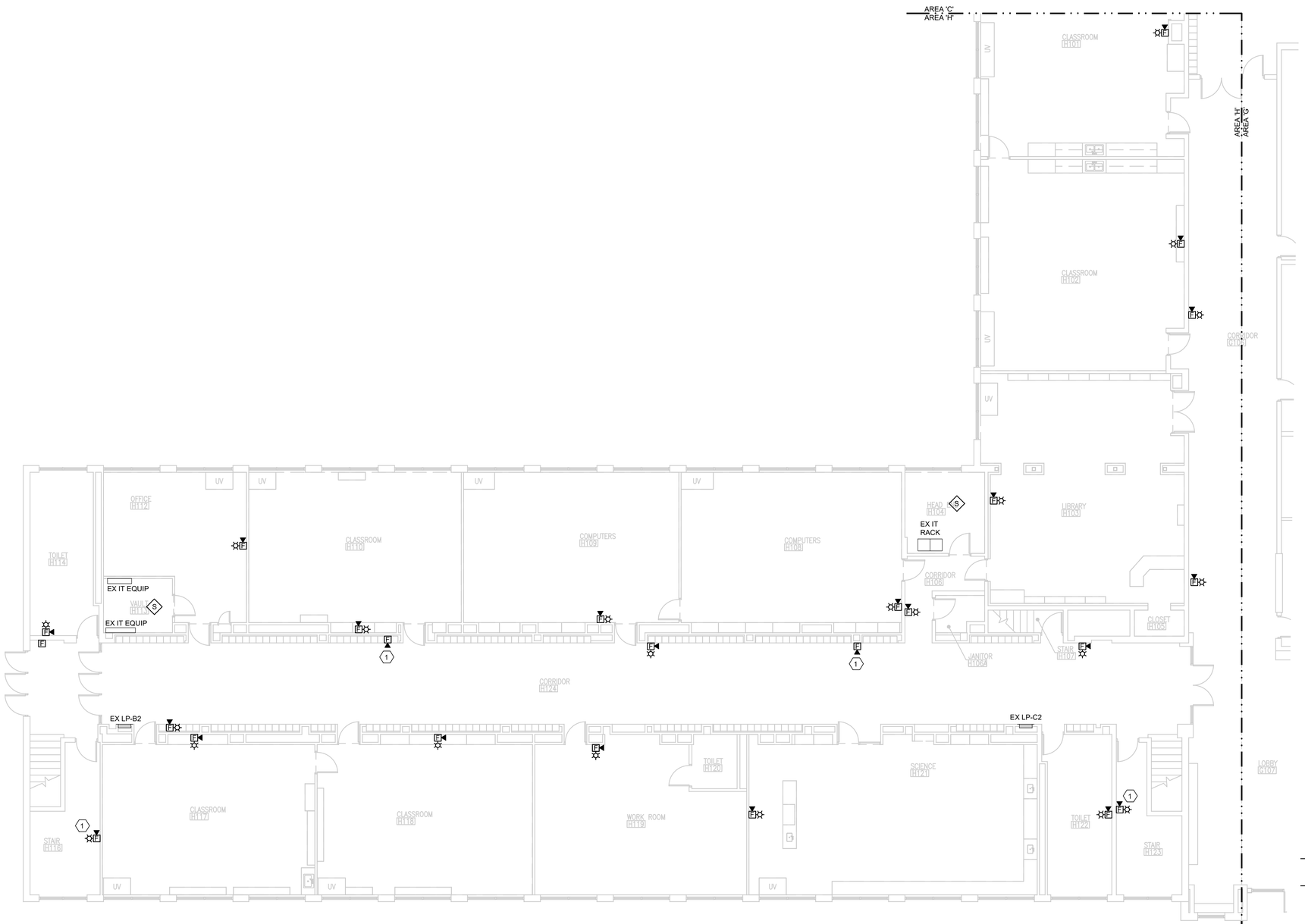

FLOOR PLAN AREA 'H' - FIRE ALARM
1/8"=1'-0"

FIRE ALARM GENERAL NOTES (PART OF DIV 26000 SCOPE OF WORK)

1. INSTALL NEW FIRE ALARM DEVICES AT LOCATIONS SHOWN.
2. PROVIDE ANY RECONFIGURATION, PROGRAMMING AND COMMISSIONING OF THE FIRE ALARM EQUIPMENT.
3. PROVIDE ALL BFS/LARA DOCUMENTATION REQUIRED INCLUDING THE BFS-12A FORM.
4. ELECTRICAL CONTRACTOR SHALL VERIFY EXISTING FIRE ALARM WIRING PRIOR TO DEMOLITION TO THEN REWIRE SYSTEM AS NEEDED.

FIRE ALARM WIRING METHODS

1. FIRE ALARM WIRING INSTALLED ABOVE THE FINISHED CEILING IS ACCEPTABLE TO USE THE FREE-AIR METHOD. USE "J" HOOKS OR "D" RINGS FOR SUPPORT METHODS. PROVIDE PLENUM RATED CABLE FOR THE ENTIRE PROJECT.
2. FIRE ALARM DEVICE MOUNTING HEIGHTS SHALL BE INSTALLED IN ACCORDANCE WITH NFPA 72 NATIONAL FIRE ALARM CODE, BUREAU OF FIRE SERVICES, MICHIGAN BARRIER FREE DESIGN MANUAL AND OTHER APPLICABLE CODES. MOUNTING HEIGHT REQUIREMENTS:
   - WALL MOUNTED AUDIO/VISUAL UNITS SHALL BE MOUNTED SUCH THAT THE ENTIRE LENS IS NOT LESS THAN 80" AND NOT GREATER THAN 96" ABOVE THE FINISHED FLOOR. CEILING MOUNTED DEVICES ARE ACCEPTABLE AND ARE NOTED ON THE DRAWINGS.
   - MANUAL PULL STATIONS SHALL BE MOUNTED 48" MAXIMUM TO THE TOP OF BOX FROM THE FINISHED FLOOR.
3. ALL BRANCH DEVICES SHALL USE A 4" SQUARE STEEL BOX WITH A SINGLE GANG TRIM RING FOR INTERIOR GYPSUM BOARD WALLS. MASONRY BOXES ARE ACCEPTABLE FOR MASONRY WALL INSTALLATION. NON-METALLIC BOXES ARE NOT ACCEPTABLE FOR THIS PROJECT.
4. J-HOOKS AND D-RINGS SHALL BE USED FOR THE LOW-VOLTAGE SYSTEM WIRING INCLUDING BUT NOT LIMITED TO: FIRE ALARM, VOICE, DATA, PA, LIGHTING CONTROL, ETC.
5. ALL DEVICES SHOWN, THE DESIGN INTENT IS TO REUSE THE EXISTING ROUGH-IN. FURNISH AND INSTALL NEW WIREMOLD TO EXISTING DEVICES IF EXISTING RACEWAYS ARE NOT FUNCTIONAL.
6. DUE TO THE REMOVAL OF THE EXISTING SYSTEM DURING INSTALLATION OF NEW, THE OWNER SHALL COORDINATE WITH THE FIRE MARSHALL TO PROVIDE FIRE WATCH AS REQUIRED.
7. ALL NEW DEVICES SHALL BE DENOTED BY KEYED NOTE.

KEYED NOTES

(1) FURNISH AND INSTALL NEW SURFACE MOUNTED JUNCTION BOX AND WIRE MOLD FOR NEW FIRE ALARM DEVICE INSTALLED ON THE WALL. PAINT TO MATCH THE EXISTING CONDITIONS.

STATE OF MICHIGAN
JAMES W. FIELDS
No. 6201047001
PROFESSIONAL ENGINEER
August 28, 2026
MAI #2026-01014

KEY PLAN

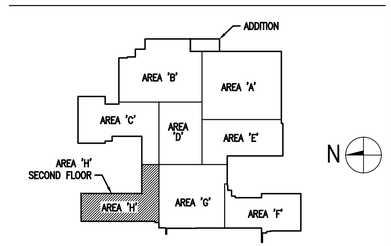

MACMILLAN ASSOCIATES
CONSULTING ENGINEERS
714 EAST MIDLAND STREET • BAY CITY, MICHIGAN 48706
(989) 894-4300 F (989) 894-9930 WWW.MACMILLANASSOCIATES.COM

MARQUETTE OFFICE:
1021 W. BARGA AVENUE
MARQUETTE, MI 49855
PHONE: (906)228-4455
FAX: (906)228-7524

BRIGHTON OFFICE:
8011 W. GRAND RIVER AVE., SUITE 600
BRIGHTON, MI 48116
PHONE: (810)229-2701
FAX: (810)229-4787

INTEGRATED DESIGNS INC.
ARCHITECTURE
ENGINEERING
CONSULTING

HARBOR BEACH PUBLIC SCHOOLS
PHASE 1 - 2026 ADDITION & RENOVATIONS
HARBOR BEACH, MICHIGAN
PROJECT NO. 24-128

	BY	DATE
DESIGN	BS	08/28/26
DRAWN	RLM	08/28/26
CHECKED	BS	08/28/26
APPROVED	JWF	08/28/26

NO.	REVISIONS	DATE
0	FOR CONSTRUCTION	08/28/26

FLOOR PLAN AREA 'H' - FIRE ALARM

COPYRIGHT © 2025 INTEGRATED DESIGNS INC.

E4.9

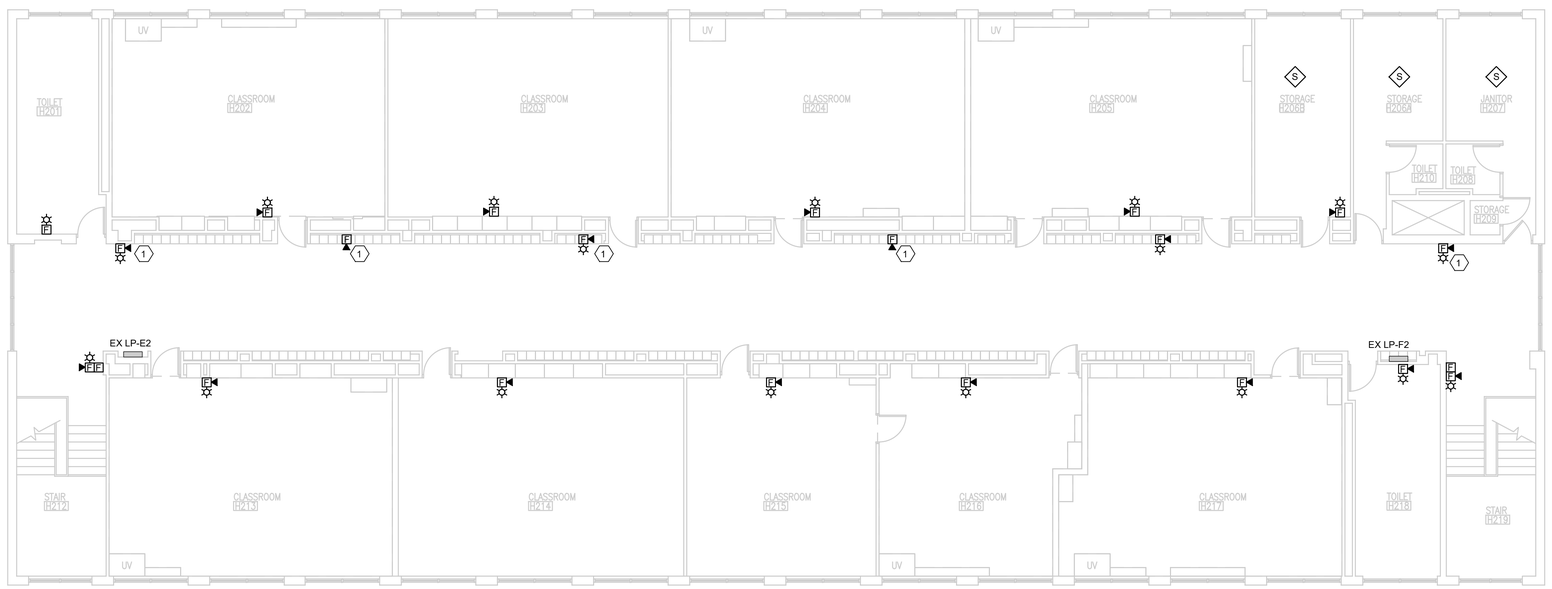

FLOOR PLAN AREA 'H' SECOND FLOOR - FIRE ALARM
1/8"=1'-0"

FIRE ALARM GENERAL NOTES (PART OF DIV 26000 SCOPE OF WORK)

1. INSTALL NEW FIRE ALARM DEVICES AT LOCATIONS SHOWN.
2. PROVIDE ANY RECONFIGURATION, PROGRAMMING AND COMMISSIONING OF THE FIRE ALARM EQUIPMENT.
3. PROVIDE ALL BFS/LARA DOCUMENTATION REQUIRED INCLUDING THE BFS-12A FORM.
4. ELECTRICAL CONTRACTOR SHALL VERIFY EXISTING FIRE ALARM WIRING PRIOR TO DEMOLITION TO THEN REWIRE SYSTEM AS NEEDED.

FIRE ALARM WIRING METHODS

1. FIRE ALARM WIRING INSTALLED ABOVE THE FINISHED CEILING IS ACCEPTABLE TO USE THE FREE-AIR METHOD. USE "J" HOOKS OR "D" RINGS FOR SUPPORT METHODS. PROVIDE PLENUM RATED CABLE FOR THE ENTIRE PROJECT.
2. FIRE ALARM DEVICE MOUNTING HEIGHTS SHALL BE INSTALLED IN ACCORDANCE WITH NFPA 72 NATIONAL FIRE ALARM CODE, BUREAU OF FIRE SERVICES, MICHIGAN BARRIER FREE DESIGN MANUAL AND OTHER APPLICABLE CODES. MOUNTING HEIGHT REQUIREMENTS:

   · WALL MOUNTED AUDIO/VISUAL UNITS SHALL BE MOUNTED SUCH THAT THE ENTIRE LENS IS NOT LESS THAN 80" AND NOT GREATER THAN 96" ABOVE THE FINISHED FLOOR. CEILING MOUNTED DEVICES ARE ACCEPTABLE AND ARE NOTED ON THE DRAWINGS.

   · MANUAL PULL STATIONS SHALL BE MOUNTED 48" MAXIMUM TO THE TOP OF BOX FROM THE FINISHED FLOOR.
3. ALL BRANCH DEVICES SHALL USE A 4" SQUARE STEEL BOX WITH A SINGLE GANG TRIM RING FOR INTERIOR GYPSUM BOARD WALLS. MASONRY BOXES ARE ACCEPTABLE FOR MASONRY WALL INSTALLATION. NON-METALLIC BOXES ARE NOT ACCEPTABLE FOR THIS PROJECT.
4. J-HOOKS AND D-RINGS SHALL BE USED FOR THE LOW-VOLTAGE SYSTEM WIRING INCLUDING BUT NOT LIMITED TO: FIRE ALARM, VOICE, DATA, PA, LIGHTING CONTROL, ETC.
5. ALL DEVICES SHOWN, THE DESIGN INTENT IS TO REUSE THE EXISTING ROUGH-IN. FURNISH AND INSTALL NEW WIREMOLD TO EXISTING DEVICES IF EXISTING RACEWAYS ARE NOT FUNCTIONAL.
6. DUE TO THE REMOVAL OF THE EXISTING SYSTEM DURING INSTALLATION OF NEW, THE OWNER SHALL COORDINATE WITH THE FIRE MARSHALL TO PROVIDE FIRE WATCH AS REQUIRED.
7. ALL NEW DEVICES SHALL BE DENOTED BY KEYED NOTE.

KEYED NOTES

(1) FURNISH AND INSTALL NEW SURFACE MOUNTED JUNCTION BOX WIRE MOLD FOR NEW FIRE ALARM DEVICE INSTALLED ON THE WALL. PAINT TO MATCH THE EXISTING CONDITIONS.

STATE OF MICHIGAN
August 28, 2026
MAI #2026-01014

KEY PLAN

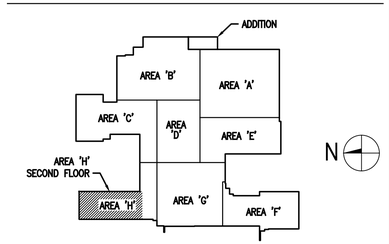

MACMILLAN ASSOCIATES
CONSULTING ENGINEERS
714 EAST MIDLAND STREET • BAY CITY, MICHIGAN 48706
(989) 894-4300 F (989) 894-9930 WWW.MACMILLANASSOCIATES.COM

MARQUETTE OFFICE:
1021 W. BARAGA AVENUE
MARQUETTE, MI 49855
PHONE: (906)228-4480
FAX: (906)228-7524
BRIGHTON OFFICE:
8011 W. GRAND RIVER AVE., SUITE 600
BRIGHTON, MI 48116
PHONE: (810)229-2701
FAX: (810)229-4787
ARCHITECTURE
ENGINEERING
CONSULTING
INTEGRATED DESIGNS INC.

HARBOR BEACH PUBLIC SCHOOLS
PHASE 1 - 2026 ADDITION & RENOVATIONS
HARBOR BEACH, MICHIGAN
PROJECT NO. 24-128

NO.	REVISIONS	DATE
0	FOR CONSTRUCTION	08/28/26

	BY	DATE
DESIGN	BS	08/28/26
DRAWN	RLM	08/28/26
CHECKED	BS	08/28/26
APPROVED	JWF	08/28/26

FLOOR PLAN AREA 'H' 2ND - FIRE ALARM

COPYRIGHT © 2025 INTEGRATED DESIGNS INC.

E4.10

ELECTRICAL SYMBOLS

- A — 2'x2' FIXTURE TYPE INDICATED, TYPE A FIXTURE SYMBOL
- HALF SHADED FIXTURES ARE EMERGENCY FIXTURES
- A — 1'x4' LED FIXTURE TYPE INDICATED
- DOWNLIGHT OR SURFACE FIXTURE
- A — WALL MOUNTED FIXTURE
- E — EXIT LIGHT
- E2 — DOUBLE SIDED EXIT LIGHT
- E — MOUNTED EXIT LIGHT
- EH — HIGH POWERED BATTERY EXIT SIGN
- SURFACE MOUNTED REMOTE HEAD
- SITE POLE LIGHT
- DUPLEX RECEPTACLE
- CONTROLLED RECEPTACLE
- QUADPLEX RECEPTACLE
- SPECIAL RECEPTACLE
- GFI — GFI RECEPTACLE
- S — NX DIGITAL SWITCH, ON/OFF, WHITE COLOR
  NX # NXSW2-OO-WH
- S_M — LIGHTHAWK WALL SENSOR SWITCH, ONE BUTTON, 1000 SQ FT, WHITE COLOR
  NX # LHRMTS1-N-WH
- S_K — KEYED SWITCH
- S_3 — NX DIGITAL WIRED DIMMING SWITCH, 3 BUTTON, ON/OFF, RAISE, LOWER, WHITE COLOR
  NX # NXSW2-ORLO-WH
- S_2 — NX DIGITAL WIRED SWITCH, 2 BUTTON, ON/OFF, WHITE COLOR
  NX # NXSW2-OO-WH
- S_{DMX} — DMX CONTROLLER
- DEVICE CONNECTION
- NON-FUSED DISCONNECT SWITCH
- SINGLE PHASE MOTOR
- PANELBOARD
- MANUAL MOTOR STARTER
- FB — FLOOR BOX
- JB — JUNCTION BOX
- CR — CARD/PROX READER
- HH — HAND HOLE
- PB — PULL BOX
- PC — EXTERIOR PHOTOCELL FOR DUSK TO DAWN
- EBS — UL 924 DEVICE
- POWER FEED CONNECTION
- PS — NX WALL PARTITION SENSOR MODULE
  NX # NXWPS
- CE — NX CONTACT CLOSURE INTERFACE MODULE
  NX # NXCI
- PR — NX ROOM CONTROLLER POWER PACK, 1 SPST SWITCHED, (1) 0-10V DIMMING OUTPUTS
  NX # NXRCFX2-1RD-UNV
- PR — NX ROOM CONTROLLER POWER PACK, RECEPTACLE CONTROL
- D18 — 1500 SQUARE FOOT CEILING MOUNTED 360 DEGREE DUAL TECHNOLOGY OCCUPANCY SENSOR. NX# NXSMDT-OMNI
- D20 — 2000 SQUARE FOOT HIGH BAY CEILING MOUNTED 360 DEGREE DUAL TECHNOLOGY OCCUPANCY SENSOR.
  NX# NXSMDT
- DH1 — NX DIGITAL SMART PIR OCCUPANCY SENSOR, HIGH MOUNT, 360 DEGREE
  NX # NXSMP2-HMO
- S — CEILING MOUNTED 8" IP ROUND CEILING SPEAKER. ONE WAY PAGING. 45 OHM. (1) 18/2 TWISTED PAIR CABLE
  VALCOM # VIP-120A OR EQUAL
- S1 — CEILING MOUNTED 2X2 SPEAKER. 2 WAY COMMUNICATION. LAY-IN SPEAKER ASSEMBLY WITH RJ45 CONNECTOR. (1) CAT6A CABLE
  RAULAND # BAFKIT2X2LRJ OR EQUAL.
- S2 — WALL MOUNTED LOUDSPEAKER, ONE-WAY PAGING, 16 WATT, 110DB SPL, VANDAL RESISTANT (1) 18/2 TWISTED PAIR CABLE
  QUAM # 6VPS OR EQUAL
- C H — WALL MOUNTED ANALOG CLOCK OWNER FURNISHED, CONTRACTOR INSTALLED

- CAM — SECURITY CAMERA FURNISHED BY OWNER. PROVIDE SINGLE GANG ROUGH IN WITH 1 CAT6A CABLE AND DATA JACK
- ADA ROUGH IN INSTALL 4" SQUARE ROUGH IN WITH 1" CONDUIT STUB TO ACCESSIBLE CEILING SPACE
- CR — CORD REEL
- GFI PUSH BUTTON
- PHONE OUTLET
- TV — VIDEO/TV OUTLET 4" SQUARE ROUGH IN, (1)CAT 6A CABLE SINGLE GANG TRIM RING, 1" CONDUIT TO ACCESSIBLE CEILING SPACE
- DATA OUTLET 4" SQUARE ROUGH IN, SINGLE GANG TRIM RING, 1" CONDUIT TO ACCESSIBLE CEILING SPACE 1 CAT6A WITH JACK AND FACEPLATE
- 2 — DATA OUTLET 4" SQUARIE ROUGH IN, SINGLE GANG TRIM RING, 1" CONDUIT TO ACCESSIBLE CEILING SPACE, 2 CAT6A WITH JACKS AND FACEPLATE
- WAP — WIRELESS ACCESS POINT PROVIDE (2)CAT 6A CABLES
  BACK TO DATA RACK "WAP" SHALL BE OWNER FURNISHED CONTRACTOR INSTALLED
- F — FIRE ALARM PULL STATION
- DSD — DUCT SMOKE DETECTOR
- S — SMOKE DETECTOR
- DH — DOOR HOLDER
- FS — FLOW SWITCH
- TS — TAMPER SWITCH
- F C — FIRE ALARM STROBE ONLY
  "C" DENOTES CEILING MOUNTED
- F C — FIRE ALARM SPEAKER/STROBE COMBO
  "C" DENOTES CEILING MOUNTED
- F — WALL MOUNTED FIRE ALARM SPEAKER/STROBE COMBO
- F — FIRE ALARM SPEAKER

BOD	BOTTOM OF DEVICE
AC	ABOVE COUNTER
EC	ELECTRICAL CONTRACTOR
AFF	ABOVE FINISH FLOOR
EX	EXISTING
IDF	INTERMEDIATE DATA FRAME
GFI	GROUND FAULT CIRCUIT INTERRUPTER
MDF	MAIN DATA FRAME
TOD	TOP OF DEVICE
WP	WEATHER PROOF
WR	WEATHER RESISTANT
FACP	FIRE ALARM CONTROL PANEL
MSB	MAIN SWITCHBOARD

- UNDERGROUND
- CROSS HATCHED FOR DEMOLITION OF UNDERGROUND
- DASHED INDICATES DEMOLITION

LOW VOLTAGE SYSTEM NOTES

DIVISION 26000 REQUIREMENTS

- 1"C TO ACCESSIBLE CEILING SPACE WITH 4" SQUARE EXTRA DEEP BOX AND SINGLE GANG TRIM RING.
- 1"C TO ACCESSIBLE CEILING SPACE WITH 4" SQUARE EXTRA DEEP BOX AND SINGLE GANG TRIM RING.
- W — 1"C TO ACCESSIBLE CEILING SPACE WITH 4" SQUARE EXTRA DEEP BOX AND SINGLE GANG TRIM RING.
- TV — 1"C TO ACCESSIBLE CEILING SPACE WITH 4" SQUARE EXTRA DEEP BOX AND SINGLE GANG TRIM RING.
- CR — 3/4"C TO ACCESSIBLE CEILING SPACE WITH 4" SQUARE EXTRA DEEP BOX AND SINGLE GANG TRIM RING.
- CAM — 1" C TO ACCESSIBLE CEILING SPACE WITH 4" SQUARE EXTRA DEEP BOX AND SINGLE GANG TRIM RING.

DIVISION 270000 REQUIREMENTS

- DATA OUTLET 4" SQUARE ROUGH IN, SINGLE GANG TRIM RING, 1" CONDUIT TO ACCESSIBLE CEILING SPACE 1 CAT6A WITH JACK AND FACEPLATE
- 2 — DATA OUTLET 4" SQUARE ROUGH IN, SINGLE GANG TRIM RING, 1" CONDUIT TO ACCESSIBLE CEILING SPACE, 2 CAT6A WITH JACKS AND FACEPLATE
- WAP — WIRELESS ACCESS POINT PROVIDE (2)CAT 6A CABLES
  BACK TO DATA RACK "WAP" SHALL BE OWNER FURNISHED CONTRACTOR INSTALLED

FLOORBOX SCHEDULE

- FB — 4-GANG ON-GRADE RECTANGULAR FLOORBOX. 3.0" BOX DEPTH, 3/4" TO 1-1/4" CONDUIT KNOCKOUTS. BRUSHED ALUMINUM FLANGELESS COVER FOR CONCRETE FLOOR INSTALLATION. PROVIDE REQUIRED DEVICE PLATES FOR DECORA DUPLEX RECEPTACLES, HDMI JACK AND DATA OUTLETS.
  USE LEGRAND #RFBA4R30OG OR EQUAL. COVER #FPBTAL

LIGHT FIXTURE SCHEDULE

A — VANTAGE VED SERIES 6" DOWNLIGHT
1500 LUMEN, 80CRI, 4000K COLOR TEMPERATURE
UNIVERSAL VOLTAGE, 0-10V DIMMING, SOFT GLOW CLEAR REFLECTOR
VANTAGE# VED60CRU1540KV6060SGCSDM

AE — SAME AS TYPE A EXCEPT WITH BATTERY

A2 — SAME AS TYPE A EXCEPT 750LM

A2E — SAME AS TYPE A2 EXCEPT WITH BATTERY

B — VISCOR RECESSED LMEZ 4" LINEAR CONTINOUS RUN
2200 LUMENS PER 4' SECTION, 80CRI, 4000K COLOR TEMPERATURE
UNIVERSAL VOLTAGE, 0-10V DMMING, FROSTED LENS
VISCOR# LMEZYFXXLED8022LUNV

BE — SAME AS B EXCEPT WITH BATTERY

C — VISCOR 2X2 LRTH CENTER BASKET TROFFER
80+ CRI, 4000K, 3200 LUMEN, RECESSED MOUNTING
NARROW FROSTED ACRYLIC LENS, 0-10V DIMMING, UNIVERSAL VOLTAGE
VISCOR# LRTH2X2LED40K032LUNV

CE — SAME AS TYPE C EXCEPT WITH BATTERY

C2 — SAME AS TYPE C EXCEPT 4000 LUMENS

C2E — SAME AS TYPE C2 EXCEPT WITH BATTERY

D — VISCOR SUSPENDED PENDANT 2'X8', WAVE LENS
80+ CRI, 4000K, 9000 LUMEN, SUSPENDED MOUNTING
FROSTED ACRYLIC LENS, 0-10V DIMMING, UNIVERSAL VOLTAGE
VISCOR# OCRW2X8LED840K061LUNV (NO EQUALS ALLOWED)

DE — SAME AS TYPE D EXCEPT WITH BATTERY

E — COMPASS EDGELIT COMBO EXIT SIGN
GREEN LETTERS, DUAL EMERGENCY HEADS AND BRUSHED ALUMINUM
SINGLE FACE, RECESSED CEILING MOUNT AND NICKEL HYDRIDE BATTERY
COMPASS# CELCR1GN

E2 — SAME AS TYPE E EXCEPT DOUBLE SIDED

F1 — VISCOR SUSPENDED HIGH BAY, 24"X24"
24000 LUMENS, 80CRI, 4000K COLOR TEMPERATURE
UNIVERSAL VOLTAGE, DMX DRIVERS, FROSTED LENS
VISCOR# LHBCVL424LED840K240LUNVDMXP73 (NO EQUALS ALLOWED)

F1E — SAME AS TYPE F1 EXCEPT WITH BATTERY

F2 — SAME AS B1 EXCEPT WITH RGBW(40K)

GA — EXISTING LIGHT FIXTURE TO BE REINSTALLED IN THE K-8 GYM

GB — ALBEO ROUND HIBAY 80CRI, 4000K AND 24,000 LUMENS WHITE FINISH, MVOLT AND 0-10V DIMMING
ALBEO# PRC1108SOQVSTAQW

GBE — SAME AS TYPE GB EXCEPT WITH BATTERY

AA — BEACON VIPER WALL, FULL CUTOFF WALLPACK 6000 LUMENS, 4000K COLOR TEMPERATURE, WIDE DISTRIBUTION UNIVERSAL VOLTAGE, 0-10V DIMMING PHOTOCELL
BEACON #VPW 2 80L45 4K7 3 UNV *** PC

BB — METALUMEN WET LOCATION LISTED LINEAR WALL MOUNT 450LM/FT, 2.5" WIDE, 4000K COLOR TEMPERATURE UNIVERSAL VOLTAGE, BLACK FINISH AND 0-10V DIMMING META BLANC LENS AND NATATORIUM FINISH, WITH REMOTE BATTERY FOR EMERGENCY EGRESS LIGHTING
METALUMEN# S2WD40K8MB**451WUNV

STATE OF MICHIGAN
JOHN WILLIAM FOX
ELECTRICAL ENGINEER
No. 6201046390
August 28, 2026
MAI #2026-01014

MACMILLAN ASSOCIATES
CONSULTING ENGINEERS
714 EAST MIDLAND STREET • BAY CITY, MICHIGAN 48706
(989) 894-4300 F (989) 894-9930 WWW.MACMILLANASSOCIATES.COM

MARQUETTE OFFICE:
1021 W. BARAGA AVENUE
MARQUETTE, MI 49855
PHONE: (906)228-4693
FAX: (906)228-7524

BRIGHTON OFFICE:
8011 W. GRAND RIVER AVE., SUITE 600
BRIGHTON, MI 48116
PHONE: (810)229-2701
FAX: (810)229-8787

ARCHITECTURE ENGINEERING CONSULTING
INTEGRATED DESIGNS INC.

HARBOR BEACH PUBLIC SCHOOLS
PHASE 1 - 2026 ADDITION & RENOVATIONS
HARBOR BEACH, MICHIGAN
PROJECT NO. 24-128

NO.	REVISIONS	DATE
0	FOR CONSTRUCTION	08/28/26

	BY	DATE
DESIGN	BS	08/28/26
DRAWN	RLM	08/28/26
CHECKED	BS	08/28/26
APPROVED	JWF	08/28/26

ELECTRICAL INFORMATION

COPYRIGHT © 2025 INTEGRATED DESIGNS INC.

E5.1

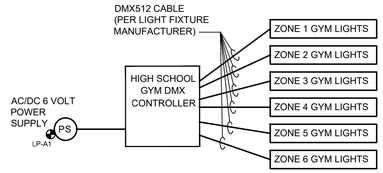

QTL # IQ-DMX-STICK-KE

- DMX512 OUTPUT
- WINDOWS / MAC SOFTWARE TO SET DYNAMIC COLORS / EFFECTS
- IPHONE / IPAD / ANDROID REMOTE AND PROGRAMMING APPS
- 1024 DMX CHANNELS. CONTROL 340 RGB FIXTURES
- MULTI-ROOM CONTROL WITH 200 SCENES, 5 ZONES
- 12 TOUCH-SENSITIVE BUTTONS. NO MECHANICAL PARTS
- TOUCH-SENSITIVE WHEEL ALLOWS FOR ACCURATE COLOR SELECTION
- SLEEK BLACK GLASS DESIGN WHICH SITS 0.43" FROM THE WALL
- USB, ETHERNET, RS232, CLOCK, 8 DRY CONNECTIVITY PORTS FOR PRO GRAMMING AND CONTROL WITH A 5V OUTPUT RELAY
- LIVE CONTROL: COLOR, DIMMER AND SPEED
- 6-9VDC 0.6A INPUT
- 8 DRY CONTACT TRIGGER PORTS
- MULTI-ZONE MICROSD MEMORY
- OPERATING TEMPERATURE: 14°F - 122°F
- DIMENSIONS: 5.75" X 4.17" X 0.43"
- WEIGHT: 0.54 LBS
- EC, EMC, ROHS, ETL STANDARD

GYM PRESET BUTTONS:

BUTTON 1 (DAILY GYM USE): ALL ZONES- STATIC WHITE- 80% LIGHT LEVEL -DEFAULT TO THIS BUTTON
BUTTON 2 (GAMES): ZONES 1,2,3,4- STATIC WHITE-100%,ZONE 5 AND 6 - STATIC WHITE-60%
BUTTON 3 (PREGAME): ZONE 3- ORANGE 100%, ZONES 1,2,4,5,6 STATIC WHITE-30%
BUTTON 4 (PRACTICE): ALL ZONES - STATIC WHITE- 100%
BUTTON 5 (TBD BY OWNER): PROGRAM AS REQUIRED
BUTTON 6 (TBD BY OWNER): PROGRAM AS REQUIRED

HIGH SCHOOL DMX CONTROLLER DETAIL

NO SCALE

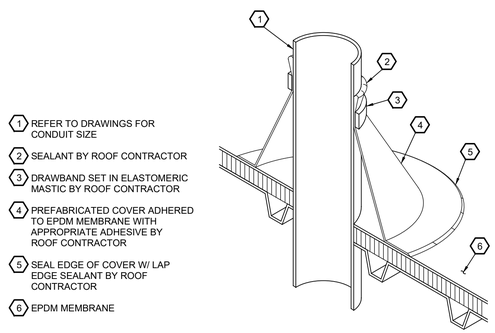

1. REFER TO DRAWINGS FOR CONDUIT SIZE
2. SEALANT BY ROOF CONTRACTOR
3. DRAWBAND SET IN ELASTOMERIC MASTIC BY ROOF CONTRACTOR
4. PREFABRICATED COVER ADHERED TO EPDM MEMBRANE WITH APPROPRIATE ADHESIVE BY ROOF CONTRACTOR
5. SEAL EDGE OF COVER W/ LAP EDGE SEALANT BY ROOF CONTRACTOR
6. EPDM MEMBRANE

ROOF CONDUIT PENETRATION DETAIL

NO SCALE

GENERAL NOTES

1. CONDUIT SHALL BE SUPPORTED WITHIN 24 INCHES ABOVE AND BELOW ROOF
2. VERIFY FINAL REQUIREMENTS WITH GENERAL CONTRACTOR AND ROOFING CONTRACTOR PRIOR TO INSTALLATION

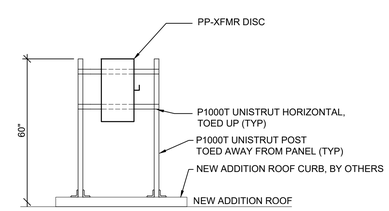

TYPICAL DISCONNECT UNISTRUT RACK ELEVATION

NO SCALE

NOTE:
MODIFY AS REQUIRED TO MEET EQUIPMENT REQUIREMENTS ON A LOCATION BY LOCATION BASIS.

A EXIT DEVICE
B POWER TRANSFER (ELECTRIC CRASH BAR, STRIKE, OR LATCH)
C CARDSLOT/SHROUD/MOUNTING PLATE
D POWER SUPPLY
(ONLY NEEDED WITH CRASH BARS AND/OR DOORS WITH HANDICAP OPENERS)
E ENCLOSURE AND POWER SUPPLY
F DOOR POSITION SWITCH
G MASTER/DOOR CONTROLLER
H HANDICAP PUSH BUTTON

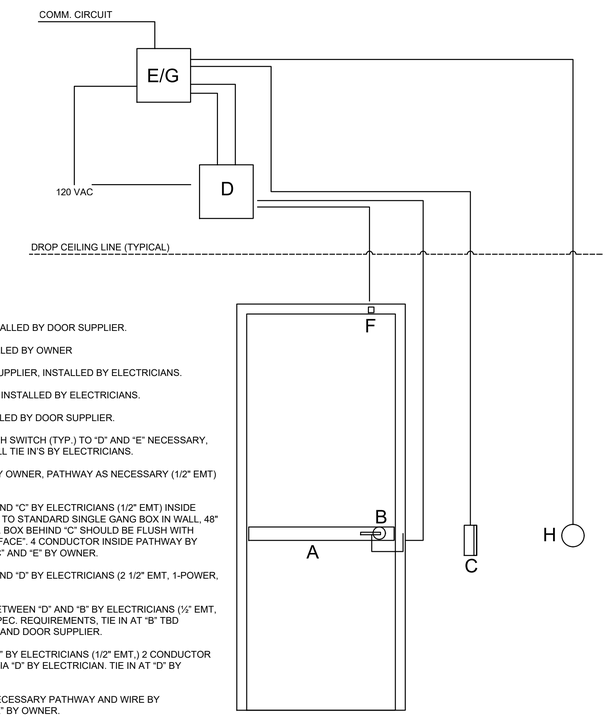

- "A, B" SUPPLIED AND INSTALLED BY DOOR SUPPLIER.
- "C" SUPPLIED AND INSTALLED BY OWNER
- "D" SUPPLIED BY DOOR SUPPLIER, INSTALLED BY ELECTRICIANS.
- "E" SUPPLIED BY OWNER, INSTALLED BY ELECTRICIANS.
- "F" SUPPLIED AND INSTALLED BY DOOR SUPPLIER.
- 120 VAC SUPPLY THROUGH SWITCH (TYP.) TO "D" AND "E" NECESSARY, CAN BE SAME CIRCUIT. ALL TIE IN'S BY ELECTRICIANS.
- "COMM CIRCUIT" TO "E" BY OWNER, PATHWAY AS NECESSARY (1/2" EMT) BY ELECTRICIANS.
- PATHWAY BETWEEN "E" AND "C" BY ELECTRICIANS (1/2" EMT) INSIDE WALL (TYP.) TERMINATES TO STANDARD SINGLE GANG BOX IN WALL, 48" ON CENTER, "BEHIND" "C". BOX BEHIND "C" SHOULD BE FLUSH WITH EXTERIOR BUILDING SURFACE". 4 CONDUCTOR INSIDE PATHWAY BY ELECTRICIAN. TIE IN AT "C" AND "E" BY OWNER.
- PATHWAY BETWEEN "E" AND "D" BY ELECTRICIANS (2 1/2" EMT, 1-POWER, 1-COMM.)
- PATHWAY AND WIRING BETWEEN "D" AND "B" BY ELECTRICIANS (½" EMT, WIRE BASED ON DOOR SPEC. REQUIREMENTS, TIE IN AT "B" TBD BETWEEN ELECTRICIANS AND DOOR SUPPLIER.
- PATHWAY FROM "D" TO "F" BY ELECTRICIANS (1/2" EMT.) 2 CONDUCTOR WIRING FROM "E" TO "F" VIA "D" BY ELECTRICIAN. TIE IN AT "D" BY OWNER".
- INPUT FROM "H" TO "G" NECESSARY PATHWAY AND WIRE BY ELECTRICIAN, TIE IN AT "E" BY OWNER.

CARD READER SCHEMATIC

NO SCALE

ADMINISTRATIVE ADDITION GROUNDING

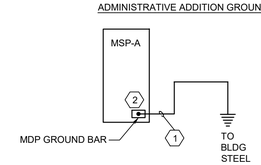

- ✕ GROUND ROD WITH EXOTHERMIC CONNECTION
- ■ MECHANICAL GROUND CONNECTION
- • EXOTHERMIC GROUND CONNECTION

NOTE

1. #3/0 GROUNDING CONDUCTOR.
2. ELECTRICAL CONTRACTOR SHALL FURNISH AND INSTALL NEW GROUNDING CONDUCTOR FROM NEW BUILDING STEEL BACK TO THE MAIN DISTRIBUTION PANELBOARD MAIN GROUND BAR.

GROUNDING/BONDING DIAGRAM

STATE OF MICHIGAN
August 28, 2026
MAI #2026-01014

MACMILLAN ASSOCIATES
CONSULTING ENGINEERS
714 EAST MIDLAND STREET • BAY CITY, MICHIGAN 48706
(989) 894-4300 F (989) 894-9930 WWW.MACMILLANASSOCIATES.COM

ARCHITECTURE
ENGINEERING
CONSULTING
INTEGRATED DESIGNS INC.
MARQUETTE OFFICE:
1021 W. BARAGA AVENUE
MARQUETTE, MI 49855
PHONE: (906)228-4660
FAX: (906)228-7524
BRIGHTON OFFICE:
8011 W. GRAND RIVER AVE., SUITE 600
BRIGHTON, MI 48116
PHONE: (810)229-2701
FAX: (810)229-4787

HARBOR BEACH PUBLIC SCHOOLS
PHASE 1 - 2026 ADDITION & RENOVATIONS
HARBOR BEACH, MICHIGAN
PROJECT NO. 24-128

NO.	REVISIONS	DATE
0	FOR CONSTRUCTION	08/28/26

	BY	DATE
DESIGN	BS	08/28/26
DRAWN	RLM	08/28/26
CHECKED	BS	08/28/26
APPROVED	JWF	08/28/26

ELECTRICAL DETAILS

COPYRIGHT © 2025 INTEGRATED DESIGNS INC.

E5.2

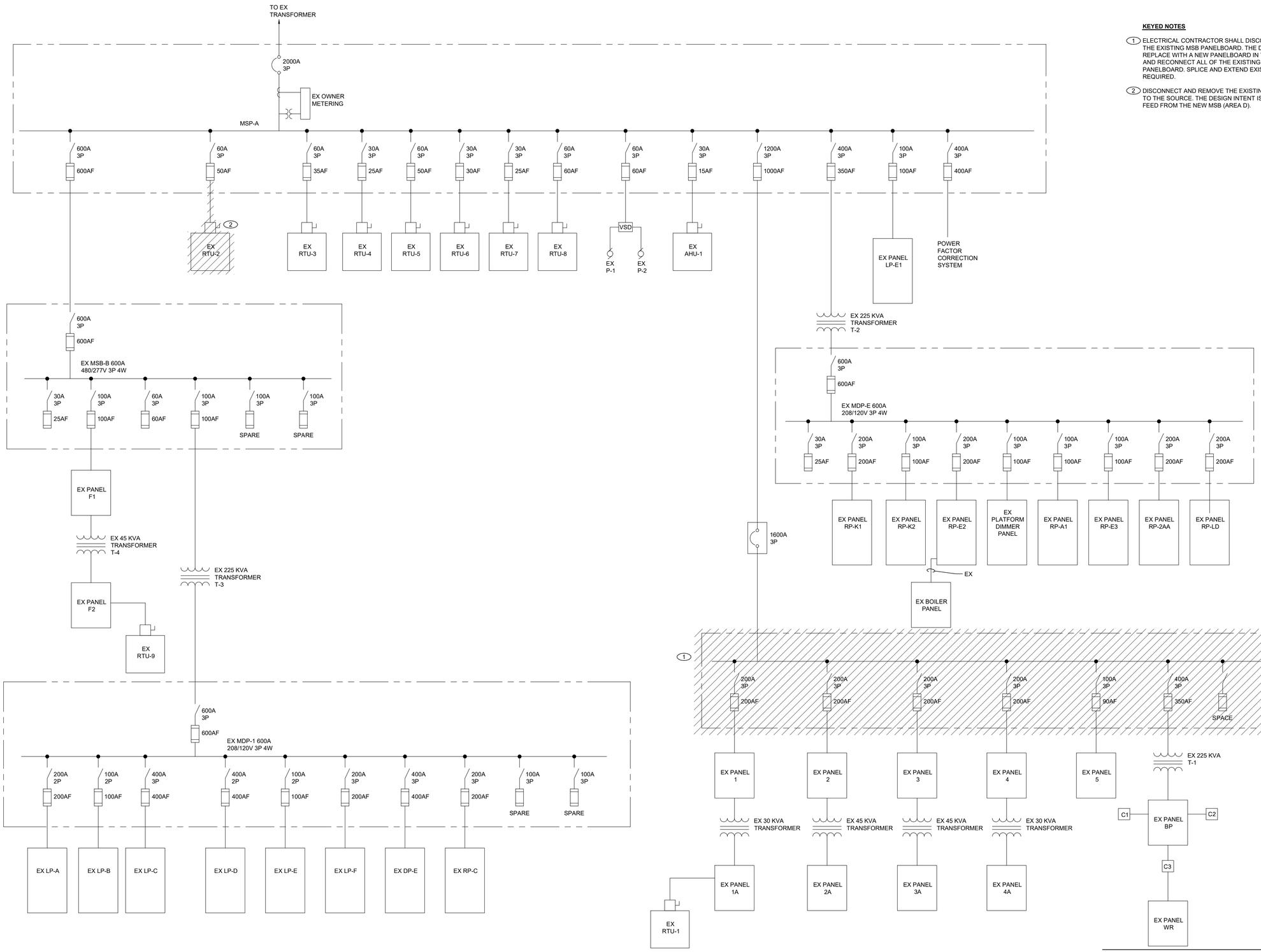

EXISTING RISER DIAGRAM

KEYED NOTES

1. ELECTRICAL CONTRACTOR SHALL DISCONNECT AND REMOVE THE EXISTING MSB PANELBOARD. THE DESIGN INTENT IS TO REPLACE WITH A NEW PANELBOARD IN THE SAME LOCATION AND RECONNECT ALL OF THE EXISTING FEEDERS IN THE NEW PANELBOARD. SPLICE AND EXTEND EXISTING FEEDERS AS REQUIRED.
2. DISCONNECT AND REMOVE THE EXISTING FEED TO RTU-2 BACK TO THE SOURCE. THE DESIGN INTENT IS TO INSTALL A NEW FEED FROM THE NEW MSB (AREA D).

STATE OF MICHIGAN
PROFESSIONAL ENGINEER
August 28, 2026
MAI #2026-01014

MACMILLAN ASSOCIATES
CONSULTING ENGINEERS
714 EAST MIDLAND STREET • BAY CITY, MICHIGAN 48706
(989) 894-4300 F (989) 894-9930 WWW.MACMILLANASSOCIATES.COM

MARQUETTE OFFICE:
1021 W. BARAGA AVENUE
MARQUETTE, MI 49855
PHONE: (906)228-7524
FAX: (906)228-7524

BRIGHTON OFFICE:
8011 W. GRAND RIVER AVE., SUITE 600
BRIGHTON, MI 48116
PHONE: (810)229-2701
FAX: (810)229-8787

INTEGRATED DESIGNS INC.
ARCHITECTURE
ENGINEERING
CONSULTING

HARBOR BEACH PUBLIC SCHOOLS
PHASE 1 - 2026 ADDITION & RENOVATIONS
HARBOR BEACH, MICHIGAN
PROJECT NO. 24-128

	BY	DATE
DESIGN	BS	08/28/26
DRAWN	RLM	08/28/26
CHECKED	BS	08/28/26
APPROVED	JWF	08/28/26

NO.	REVISIONS	DATE
0	FOR CONSTRUCTION	08/28/26

EXISTING ELECTRICAL RISER DIAGRAM

COPYRIGHT © 2025 INTEGRATED DESIGNS INC.

E5.3

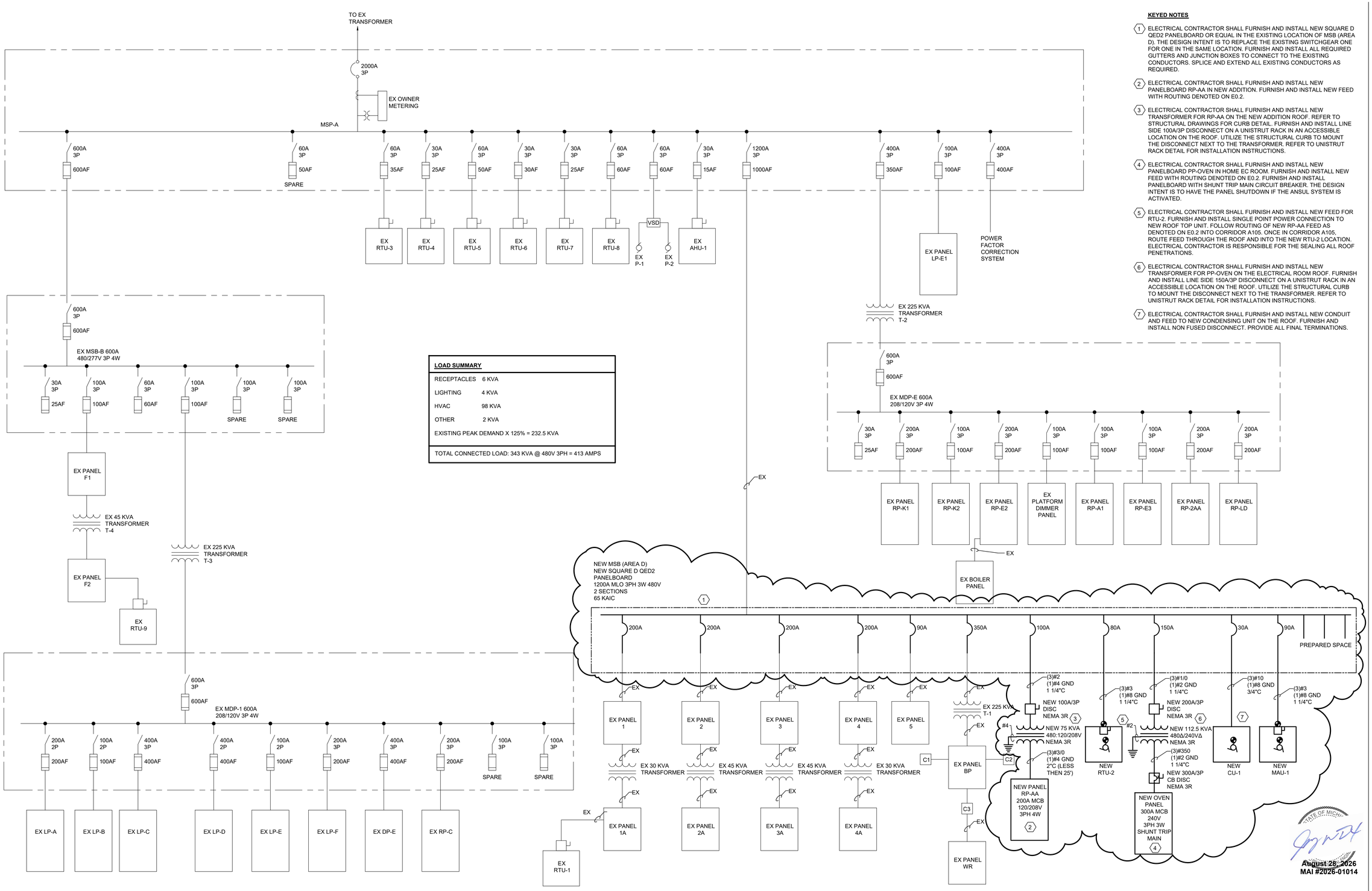

LOAD SUMMARY

RECEPTACLES	6 KVA
LIGHTING	4 KVA
HVAC	98 KVA
OTHER	2 KVA
EXISTING PEAK DEMAND X 125% = 232.5 KVA	
TOTAL CONNECTED LOAD: 343 KVA @ 480V 3PH = 413 AMPS	

KEYED NOTES

1. ELECTRICAL CONTRACTOR SHALL FURNISH AND INSTALL NEW SQUARE D QED2 PANELBOARD OR EQUAL IN THE EXISTING LOCATION OF MSB (AREA D). THE DESIGN INTENT IS TO REPLACE THE EXISTING SWITCHGEAR ONE FOR ONE IN THE SAME LOCATION. FURNISH AND INSTALL ALL REQUIRED GUTTERS AND JUNCTION BOXES TO CONNECT TO THE EXISTING CONDUCTORS. SPLICE AND EXTEND ALL EXISTING CONDUCTORS AS REQUIRED.
2. ELECTRICAL CONTRACTOR SHALL FURNISH AND INSTALL NEW PANELBOARD RP-AA IN NEW ADDITION. FURNISH AND INSTALL NEW FEED WITH ROUTING DENOTED ON E0.2.
3. ELECTRICAL CONTRACTOR SHALL FURNISH AND INSTALL NEW TRANSFORMER FOR RP-AA ON THE NEW ADDITION ROOF. REFER TO STRUCTURAL DRAWINGS FOR CURB DETAIL. FURNISH AND INSTALL LINE SIDE 100A/3P DISCONNECT ON A UNISTRUT RACK IN AN ACCESSIBLE LOCATION ON THE ROOF. UTILIZE THE STRUCTURAL CURB TO MOUNT THE DISCONNECT NEXT TO THE TRANSFORMER. REFER TO UNISTRUT RACK DETAIL FOR INSTALLATION INSTRUCTIONS.
4. ELECTRICAL CONTRACTOR SHALL FURNISH AND INSTALL NEW PANELBOARD PP-OVEN IN HOME EC ROOM. FURNISH AND INSTALL NEW FEED WITH ROUTING DENOTED ON E0.2. FURNISH AND INSTALL PANELBOARD WITH SHUNT TRIP MAIN CIRCUIT BREAKER. THE DESIGN INTENT IS TO HAVE THE PANEL SHUTDOWN IF THE ANSUL SYSTEM IS ACTIVATED.
5. ELECTRICAL CONTRACTOR SHALL FURNISH AND INSTALL NEW FEED FOR RTU-2. FURNISH AND INSTALL SINGLE POINT POWER CONNECTION TO NEW ROOF TOP UNIT. FOLLOW ROUTING OF NEW RP-AA FEED AS DENOTED ON E0.2 INTO CORRIDOR A105. ONCE IN CORRIDOR A105, ROUTE FEED THROUGH THE ROOF AND INTO THE NEW RTU-2 LOCATION. ELECTRICAL CONTRACTOR IS RESPONSIBLE FOR THE SEALING ALL ROOF PENETRATIONS.
6. ELECTRICAL CONTRACTOR SHALL FURNISH AND INSTALL NEW TRANSFORMER FOR PP-OVEN ON THE ELECTRICAL ROOM ROOF. FURNISH AND INSTALL LINE SIDE 150A/3P DISCONNECT ON A UNISTRUT RACK IN AN ACCESSIBLE LOCATION ON THE ROOF. UTILIZE THE STRUCTURAL CURB TO MOUNT THE DISCONNECT NEXT TO THE TRANSFORMER. REFER TO UNISTRUT RACK DETAIL FOR INSTALLATION INSTRUCTIONS.
7. ELECTRICAL CONTRACTOR SHALL FURNISH AND INSTALL NEW CONDUIT AND FEED TO NEW CONDENSING UNIT ON THE ROOF. FURNISH AND INSTALL NON FUSED DISCONNECT. PROVIDE ALL FINAL TERMINATIONS.

REVISED ELECTRICAL RISER DIAGRAM

MACMILLAN ASSOCIATES
CONSULTING ENGINEERS
714 EAST MIDLAND STREET • BAY CITY, MICHIGAN 48706
(989) 894-4300 F (989) 894-9930 WWW.MACMILLANASSOCIATES.COM

MARQUETTE OFFICE:
1021 W. BARAGA AVENUE
MARQUETTE, MI 49855
PHONE: (906)228-4693
FAX: (906)228-7524
BRIGHTON OFFICE:
8011 W. GRAND RIVER AVE., SUITE 600
BRIGHTON, MI 48116
PHONE: (810)229-2701
FAX: (810)229-8787
ARCHITECTURE ENGINEERING CONSULTING
INTEGRATED DESIGNS INC.

HARBOR BEACH PUBLIC SCHOOLS
PHASE 1 - 2026 ADDITION & RENOVATIONS
HARBOR BEACH, MICHIGAN
PROJECT NO. 24-128

NO	REVISIONS	DATE
0	FOR CONSTRUCTION	08/28/26

	BY	DATE
DESIGN	BS	08/28/26
DRAWN	RLM	08/28/26
CHECKED	BS	08/28/26
APPROVED	JWF	08/28/26

REVISED ELECTRICAL RISER DIAGRAM

COPYRIGHT © 2025 INTEGRATED DESIGNS INC.

E5.4

EXISTING PNL RP-A1

MAIN: SIZE & TYPE: 225 A MLO
BUS RATING: 225 A
VOLTAGE: 120 / 208 V 3 Ø, 4 WIRE
MOUNTING: SURFACE

PANEL LOCATION: GYM STORAGE
FEEDER SIZE: 225A
FED FROM: MDP-E
MIN RMS AMPS:

CKT #	CIRCUIT DESCRIPTION	LOAD (KVA) A	B	C	AMPS / POLES	CKT #	LOAD TYPE	CKT #	AMPS / POLES	LOAD (KVA) A	B	C	CIRCUIT DESCRIPTION	CKT #
1	EX LIGHTING A102				20A/1P	1		2	40A/1P				GYM BACKBOARD MOTORS	2
3	EX RMS A106A,A125 RECEPT				20A/1P	3		4	40A/1P				GYM BACKBOARD MOTORS	4
5	EX RMS A107,A108,A126 RECEPT				20A/1P	5		6	40A/1P				GYM BACKBOARD MOTORS	6
7	EX RM A124 RECEPT				20A/1P	7		8	20A/1P				SCOREBOARD	8
9	EX RM A124 RECEPT				20A/1P	9		10	20A/1P				ROLL-UP GYM DIVIDER	10
11	EX RM A124 RECEPT				20A/1P	11		12	20A/1P				BLANK	12
13	EX RM A124 RECEPT				20A/1P	13		14	20A				EAST WALL BLEACHER MOTOR	14
15	EX RM A124 RECEPT				20A/1P	15		16	/				EAST WALL BLEACHER MOTOR	16
17	EX RM A124 RECEPT				20A/1P	17		18	3P				EAST WALL BLEACHER MOTOR	18
19	EX RM A123 RECEPT				20A/1P	19		20	20A				WEST WALL BLEACHER MOTOR	20
21	EX RM A123 RECEPT				20A/1P	21		22	/				WEST WALL BLEACHER MOTOR	22
23	EX RM A123 RECEPT				20A/1P	23		24	3P				WEST WALL BLEACHER MOTOR	24
25	EX RM A123 RECEPT				20A/1P	25		26	30A/1P				ROOM A113, HAND DRYER	26
27	EX GYM SOUND EQUIP				20A/1P	27		28	30A/1P				ROOM A113, HAND DRYER	28
29	EX GYM LIGHTING CONTROLS				20A/1P	29		30	20A/1P				FIRE DAMPER	30
31	BLANK				20A/1P	31		32	20A/1P				ROOM A113, RECEPT	32
33	RM A109, HAND DRYER				20A/1P	33		34	20A/1P				CORR A102 DISPLAY, RECEPT	34
35	RM A109, HAND DRYER				20A/1P	35		36	20A/1P				CORR A102 DISPLAY, RECEPT	36
37	BLANK				20A/1P	37		38	20A/1P				CORR A102 DISPLAY, LIGHT	38
39	SMOKE/FIRE, DAMPERS				20A/1P	39		40	20A/1P				CORR A102 RECEPT	40
41	ROOM A109, RECEPT				20A/1P	41		42	20A/1P				SMOKE/FIRE DAMPERS	42

LOAD SUMMARY		KVA CONNECTED A	B	C	KVA SUMMARY TOTAL		DEMAND	
RECEPTACLES	R	0.000	0.000	0.000	0.000		0.000	
LIGHTING	L	0.000	0.000	0.000	0.000	1.000	0.000	
HVAC	H	0.000	0.000	0.000	0.000	0.950	0.000	
OTHER	O	0.000	0.000	0.000	0.000	1.000	0.000	
EXISTING	E	0.000	0.000	0.000	0.000	1.000	0.000	
TOTAL KVA		0.000	0.000	0.000	0.000		0.000	TOTAL ESTIMATE KVA
VOLTS / PHASE		120	120	120	208		208	SYSTEM VOLTAGE
AMPS / PHASE		0.000	0.000	0.000	0.000		0.000	AMPS

NOTES:

EX PNL LP 3A2

MAIN: SIZE & TYPE: 250 A MLO
BUS RATING: 250 A
VOLTAGE: 120 / 208 V 1 Ø, 3 WIRE
MOUNTING: WALL

PANEL LOCATION: HOME EC STORAGE ROOM
FEEDER SIZE: 100A
FED FROM: PANEL 3A
MIN RMS AMPS:

CKT #	CIRCUIT DESCRIPTION	LOAD (KVA) A	B	C	AMPS / POLES	CKT #	LOAD TYPE	CKT #	AMPS / POLES	LOAD (KVA) A	B	C	CIRCUIT DESCRIPTION	CKT #
1	**KEF-2**	**0.687**			**15A/**	1	H	E	2	20A			STAFF BATHROOM	2
3	**KEF-2**		**0.687**		**2P**	3	H	E	4	2P			HAND DRYER	4
5	**KEF-3**			**0.687**	**15A/**	5	H	E	6	50A			**SPARE**	6
7	**KEF-3**	**0.687**			**2P**	7	H	E	8	2P			**SPARE**	8
9	24 V TRANSFORMER WOMEN				20/1	9	E	E	10	20/1			DRINKING FOUNTAIN	10
11	DISHWASHER				20/1	11	E	E	12	20/1			24 V TRANSFORMER MEN	12
13	**SPARE**				20/1	13	E	E	14	50A			**SPARE**	14
15	**SPARE**				30A	15	E	E	16	2P			**SPARE**	16
17	**SPARE**				2P	17	E	H	18	**20/1**		**1.392**	**KEF-1**	18
19	DRYER KIDS					19	E	H	20	**20/1**	**1.392**		**KEF-4**	20
21	DRYER CLOSET					21	E	R	22	**20/1**		**0.360**	**COUNTER RECEPT RANGE #1**	22
23	EMPTY					23		R	24	**20/1**			**COUNTER RECEPT RANGE #1**	24
25	**FRIDGE RECEPT**	**0.750**			**20/1**	25	R	R	26	**20/1**	**0.360**		**COUNTER RECEPT RANGE #2**	26
27	**FRIDGE RECEPT**		**0.750**		**20/1**	27	R	R	28	**20/1**		**0.360**	**COUNTER RECEPT RANGE #2**	28
29	**FREEZER RECEPT**			**0.750**	**20/1**	29	R	R	30	**20/1**			**COUNTER RECEPT RANGE #3**	30
31	**COUNTER RECEPT RANGE #7**	**0.360**			**20/1**	31	R	R	32	**20/1**	**0.360**		**COUNTER RECEPT RANGE #4**	32
33	**FRIDGE RECEPT**		**0.750**		**20/1**	33	R	R	34	**20/1**		**0.360**	**COUNTER RECEPT RANGE #5**	34
35	**ANSUL PANEL**			**0.100**	**20/1**	35	O	R	36	**20/1**		**0.360**	**COUNTER RECEPT RANGE #6**	36
37	**SHUNT TRIP CONTROL CIRCUIT**	**0.100**			**20/1**	37	O		38				PREPARED SPACE	38
39	PREPARED SPACE					39			40				PREPARED SPACE	40
41	PREPARED SPACE					41			42				PREPARED SPACE	42

LOAD SUMMARY		KVA CONNECTED A	B	C	KVA SUMMARY TOTAL		DEMAND	
RECEPTACLES	R	1.830	2.580	1.830	6.240		6.240	
LIGHTING	L	0.000	0.000	0.000	0.000	1.000	0.000	
HVAC	H	2.766	0.687	2.079	5.532	0.950	5.255	
OTHER	O	0.100	0.000	0.100	0.200	1.000	0.200	
EXISTING	E	0.000	0.000	0.000	0.000	1.000	0.000	
TOTAL KVA		4.696	3.267	4.009	11.972		11.695	TOTAL ESTIMATE KVA
VOLTS / PHASE		120	120	120	208		208	SYSTEM VOLTAGE
AMPS / PHASE		39.133	27.225	33.408	33.232		32.464	AMPS

NOTES: 1. FOR ALL BOLDED ITEMS, FURNISH AND INSTALL NEW CIRCUIT BREAKER.

EX PNL RP-E2

MAIN: SIZE & TYPE: 225 A MLO
BUS RATING: 225 A
VOLTAGE: 120 / 208 V 3 Ø, 4 WIRE
MOUNTING: WALL

PANEL LOCATION: BOILER ROOM
FEEDER SIZE: 200A
FED FROM: MDP-E
MIN RMS AMPS:

CKT #	CIRCUIT DESCRIPTION	LOAD (KVA) A	B	C	AMPS / POLES	CKT #	LOAD TYPE	CKT #	AMPS / POLES	LOAD (KVA) A	B	C	CIRCUIT DESCRIPTION	CKT #
1	SPARE				30/1	1	E	E	2	20/1			ROOM A122 RECEPT	2
3	SPARE				20/1	3	E	E	4	20/1			ROOM A115 RECEPT	4
5	SPARE				20/1	5	E	E	6	20/1			ROOMS A110,A111,A112	6
7	BIR PUMP 1				20/1	7	E	E	8	20/1			ROOM A114, A117 RECEPT	8
9	P-3				20A	9	E	E	10	20/1			CORR A103, A104 RECEPT	10
11	P-3				2P	11	E	E	12	20/1			SPARE	12
13	BOILER PANEL				60A	13	E	E	14	20/1			CORR A104 EWC	14
15	BOILER PANEL				2P	15	E	E	16	20/1			ROOM A123 RECEPT	16
17	EMPTY					17		E	18	20/1			ROOM A119 HAND DRYER	18
19	SPARE				20/1	19	E	E	20	20/1			ROOM A120 HAND DRYER	20
21	EDISON OUTDOOR				20A	21	E	E	22	20/1			ROOM A119, A120 RECEPT	22
23	PANEL HEATER				2P	23	E	E	24	20/1			ROOM A118 RECEPT	24
25	SHUNT TRIP				20/1	25	E	E	26	20/1			ROOM A121 RECEPT	26
27	**NEW FIRE ALARM CONTROL PA**				20/1	27	E	E	28	20/1			OUTSIDE LIGHT CONTROLS	28
29	SPARE				20/1	29	E	E	30	20/1			GYM A101 RECEPT	30
31	SPARE				20/1	31	E	E	32	20/1			GYM A101 RECEPT	32
33	UH-1				20/1	33	E	E	34	20/1			GLYCOL FEEDER PUMP	34
35	MUA-2				20/1	35	E	E	36	20/1			BOILER CONTROLS	36
37	EF-K2				20/1	37	E	E	38	20/1			EF-3	38
39	ROOM A123 RECEPT				20/1	39	E	E	40	20/1			ROOM E117 RECEPT	40
41	ROOM A123 RECEPT				20/1	41	E	E	42	20/1			MECHANICAL CONTROLS	42

LOAD SUMMARY		KVA CONNECTED A	B	C	KVA SUMMARY TOTAL		DEMAND	
RECEPTACLES	R	0.000	0.000	0.000	0.000		0.000	
LIGHTING	L	0.000	0.000	0.000	0.000	1.000	0.000	
HVAC	H	0.000	0.000	0.000	0.000	0.950	0.000	
OTHER	O	0.000	0.000	0.000	0.000	1.000	0.000	
EXISTING	E	0.000	0.000	0.000	0.000	1.000	0.000	
TOTAL KVA		0.000	0.000	0.000	0.000		0.000	TOTAL ESTIMATE KVA
VOLTS / PHASE		120	120	120	208		208	SYSTEM VOLTAGE
AMPS / PHASE		0.000	0.000	0.000	0.000		0.000	AMPS

NOTES:

NEW PNL MSB

SQUARE D QED2 OR EQUAL

MAIN: SIZE & TYPE: 1200 A MLO
BUS RATING: 1200 A
VOLTAGE: 480 V 3 Ø, 3 WIRE
MOUNTING: SURFACE

PANEL LOCATION: ELECTRICAL C129
FEEDER SIZE: 1200A
FED FROM: MSB-A
MIN RMS AMPS: 65 KAIC

CKT #	CIRCUIT DESCRIPTION	LOAD (KVA) A	B	C	AMPS / POLES	CKT #	LOAD TYPE	CKT #	AMPS / POLES	LOAD (KVA) A	B	C	CIRCUIT DESCRIPTION	CKT #
1	PANEL 1	22.657			200A	1	E E	2	200A	16.152			PANEL 2	2
			22.657		/ 3P		E E		/ 3P		16.152			
				22.657			E E					16.152		
3	PANEL 3	24.747			200A	3	E E	4	200A	6.650			PANEL 4	4
			24.747		/ 3P		E E		/ 3P		6.650			
				24.747			E E					6.650		
5	PANEL 5				100A	5		6	400A				PANEL BP	6
					/ 3P				/ 3P					
7	NEW RP-AA	11.034			100A	7	O H	8	80A	16.635			RTU-2	8
			11.034		/ 3P		O H		/ 3P		16.635			
				11.034			O H					16.635		
9	NEW PP-OVEN	28.400			150A	9	O H	10	90A	18.027			MAU-1 1	10
			28.400		/ 3P		O H		/ 3P		18.027			
				28.400			O H					18.027		
11	NEW CU-1	2.191			30A	11	H	12					PREPARED SPACE	12
			2.191		/ 3P		H							
				2.191			H							
11	SURGE PROTECTIVE DEVICE	0.100			100A	13	O	14					PREPARED SPACE	14
			0.100		/ 3P		O							
				0.100			O							

LOAD SUMMARY		KVA CONNECTED A	B	C	KVA SUMMARY TOTAL		DEMAND	
RECEPTACLES	R	0.000	0.000	0.000	0.000		0.000	
LIGHTING	L	0.000	0.000	0.000	0.000	1.000	0.000	
HVAC	H	36.853	36.853	36.853	110.559	0.950	105.031	
OTHER	O	39.534	39.534	39.534	118.601	1.000	118.601	
EXISTING	E	70.206	70.206	70.206	210.618	1.000	210.618	
TOTAL KVA		146.593	146.593	146.593	439.778		434.250	TOTAL ESTIMATE KVA
VOLTS / PHASE		0	0	0	480		480	SYSTEM VOLTAGE
AMPS / PHASE		0.000	0.000	0.000	528.986		522.337	AMPS

NOTES: 1. MAU-1 SHALL BE SHUTDOWN VIA SHUNT TRIP CONTROLS IF THE ANSUL PANEL IS ACTIVATED

EX BOILER PNL

MAIN: SIZE & TYPE: 60 A MLO
BUS RATING: 60 A
VOLTAGE: 120 / 208 V 1 Ø, 3 WIRE
MOUNTING: SURFACE

PANEL LOCATION: BOILER ROOM
FEEDER SIZE: 60A
FED FROM: PANEL RP-E2
MIN RMS AMPS:

CKT #	CIRCUIT DESCRIPTION	LOAD (KVA) A	B	C	AMPS / POLES	CKT #	LOAD TYPE	CKT #	AMPS / POLES	LOAD (KVA) A	B	C	CIRCUIT DESCRIPTION	CKT #
1	SE BOILER PUMP				20A/	1		2	20A				SW COMPUTER RM	2
3	SE BOILER PUMP				2P	3		4	20A/				SW BOILER PUMP	4
5	SE BOILER PUMP			0.180	20/1	5		6	2P				SW BOILER PUMP	6
7	NE BOILER	0.180			20/1	7		8	20/1	0.180			NW BOILER	8
9	**NEW NORTH BOILER**		**0.180**		**20/1**	9	H	10	**20A/**				**NEW NORTH BOILER PUMP**	10
11	PREPARED SPACE					11	H	12	**2P**				**NEW NORTH BOILER PUMP**	12

LOAD SUMMARY		KVA CONNECTED A	B	C	KVA SUMMARY TOTAL		DEMAND	
RECEPTACLES	R	0.000	0.000	0.000	0.000		0.000	
LIGHTING	L	0.000	0.000	0.000	0.000	1.000	0.000	
HVAC	H	0.000	0.180	0.000	0.180	0.950	0.171	
OTHER	O	0.000	0.000	0.000	0.000	1.000	0.000	
EXISTING	E	0.000	0.000	0.000	0.000	1.000	0.000	
TOTAL KVA		0.000	0.180	0.000	0.180		0.171	TOTAL ESTIMATE KVA
VOLTS / PHASE		120	120	120	208		208	SYSTEM VOLTAGE
AMPS / PHASE		0.000	1.500	0.000	0.500		0.475	AMPS

NOTES: 1. FURNISH AND INSTALL NEW CIRCUIT BREAKERS FOR ALL BOLDED ITEMS IN EXISTING BOILER PANEL.

NEW PP-OVEN

SQUARE D NQ OR EQUAL

MAIN: SIZE & TYPE: 300 A MCB SHUNT TRIP
BUS RATING: 400 A
VOLTAGE: / 240 V 3 Ø, 3 WIRE
MOUNTING: SURFACE

PANEL LOCATION: HOME EC STORAGE ROOM
FEEDER SIZE: 300A
FED FROM: MSB (AREA D)
MIN RMS AMPS: 22 KAIC

CKT #	CIRCUIT DESCRIPTION	LOAD (KVA) A	B	C	AMPS / POLES	CKT #	LOAD TYPE	CKT #	AMPS / POLES	LOAD (KVA) A	B	C	CIRCUIT DESCRIPTION	CKT #
1	RANGE #1 (UNDER KEF-1)	5.200			60A/	1	O	O	2	60A/			RANGE #5 (UNDER KEF-3)	2
3	RANGE #1 (UNDER KEF-1)		5.200		2P	3	O	O	4	2P			RANGE #5 (UNDER KEF-3)	4
5	RANGE #2 (UNDER KEF-1)			5.200	60A/	5	O	O	6	60A/			RANGE #6 (UNDER KEF-3)	6
7	RANGE #2 (UNDER KEF-1)	5.200			2P	7	O	O	8	2P	5.200		RANGE #6 (UNDER KEF-3)	8
9	RANGE #3 (UNDER KEF-2)		5.200		60A/	9	O	O	10	60A/			RANGE #7 (UNDER KEF-4)	10
11	RANGE #3 (UNDER KEF-2)			5.200	2P	11	O	O	12	2P			RANGE #7 (UNDER KEF-4)	12
13	RANGE #4 (UNDER KEF-2)	5.200			60A/	13	O	O	14	30A/	2.600		HOME EC DRYER	14
15	RANGE #4 (UNDER KEF-2)		5.200		2P	15	O	O	16	2P		2.600	HOME EC DRYER	16
17	EXISTING KILN			3.600	40A/	17	O		18				PREPARED SPACE	18
19	EXISTING KILN	3.600			2P	19	O		20				PREPARED SPACE	20
21	PREPARED SPACE					21			22				PREPARED SPACE	22
23	PREPARED SPACE					23			24				PREPARED SPACE	24
25	PREPARED SPACE					25			26				PREPARED SPACE	26
27	PREPARED SPACE					27			28				PREPARED SPACE	28
29	PREPARED SPACE					29			30				PREPARED SPACE	30

LOAD SUMMARY		KVA CONNECTED A	B	C	KVA SUMMARY TOTAL		DEMAND	
RECEPTACLES	R	0.000	0.000	0.000	0.000		0.000	
LIGHTING	L	0.000	0.000	0.000	0.000	1.000	0.000	
HVAC	H	0.000	0.000	0.000	0.000	0.950	0.000	
OTHER	O	32.200	28.600	24.400	85.200	1.000	85.200	
EXISTING	E	0.000	0.000	0.000	0.000	1.000	0.000	
TOTAL KVA		32.200	28.600	24.400	85.200		85.200	TOTAL ESTIMATE KVA
VOLTS / PHASE		0	0	0	240		240	SYSTEM VOLTAGE
AMPS / PHASE		0.000	0.000	0.000	204.965		204.965	AMPS

NOTES: 1. FURNISH AND INSTALL SHUNT TRIP MAIN CIRCUIT BREAKER IN NEW PP-OVEN FOR SHUTDOWN WHEN THE ANSUL SYSTEM IS ACTIVATED.

STATE OF MICHIGAN
August 28, 2026
MAI #2026-01014

MACMILLAN ASSOCIATES
CONSULTING ENGINEERS
714 EAST MIDLAND STREET • BAY CITY, MICHIGAN 48706
(989) 894-4300 F (989) 894-9930 WWW.MACMILLANASSOCIATES.COM

MARQUETTE OFFICE:
1021 W. BARGA AVENUE
MARQUETTE, MI 49855
PHONE: (906)228-5565
FAX: (906)228-7524
BRIGHTON OFFICE:
8011 W. GRAND RIVER AVE., SUITE 600
BRIGHTON, MI 48116
PHONE: (810)229-2701
FAX: (810)229-6787
INTEGRATED DESIGNS INC
ARCHITECTURE ENGINEERING CONSULTING

HARBOR BEACH PUBLIC SCHOOLS
PHASE 1 - 2026 ADDITION & RENOVATIONS
HARBOR BEACH, MICHIGAN
PROJECT NO. 24-128

	BY	DATE
DESIGN	BS	08/28/26
DRAWN	RLM	08/28/26
CHECKED	BS	08/28/26
APPROVED	JWF	08/28/26

NO.	REVISIONS	DATE
0	FOR CONSTRUCTION	08/28/26

ELECTRICAL PANEL SCHEDULES

COPYRIGHT © 2025 INTEGRATED DESIGNS INC.

E5.5

NEW RP-AA

MAIN: SIZE & TYPE: 200 A MCB
BUS RATING: 200 A
VOLTAGE: 120 / 208 V 3 Ø, 4 WIRE
MOUNTING: SURFACE

PANEL LOCATION: ADMINISTRATIVE ADDITION
FEEDER SIZE: 200A
FED FROM: MSB (AREA D)
MIN RMS AMPS: 10 KAIC

CKT #	CIRCUIT DESCRIPTION	LOAD (KVA) A	B	C	AMPS / POLES	CKT #	LOAD TYPE	CKT #	AMPS / POLES	LOAD (KVA) A	B	C	CIRCUIT DESCRIPTION	CKT #
1	ERCP-1	0.750			20/1	1	H	H	2	50A	4.102			RTU-1	2
3	ERCP-2		0.750		20/1	3	H	H	4	/		4.102		RTU-1	4
5	ERCP-3			0.750	20/1	5	H	H	6	3P			4.102	RTU-1	6
7	ERCP-4	0.750			20/1	7	H	H	8	20A	1.333			HC-1	8
9	ERCP-5		0.750		20/1	9	H	H	10	/		1.333		HC-1	10
11	ERCP-6			0.750	20/1	11	H	H	12	3P			1.333	HC-1	12
13	ERCP-7	0.750			20/1	13	H	H	14	20A	1.166			EWH-1	14
15	ERCP-8		0.750		20/1	15	H	H	16	/		1.166		EWH-1	16
17	SPARE				20/1	17	H	H	18	3P			1.166	EWH-1	18
19	EF-6	0.052			15/1	19	H	H	20	15A/	0.271			ERV-1	20
21	EWC-1		1.200		20/1 GFI	21	H	H	22	2P		0.271		ERV-1	22
23	SPARE				20/1	23		H	24	15/1			0.120	CUH-1	24
25	TOILET RECEPTS	0.900			20/1	25	R	L	26	20/1	0.350			VESTIBULE LIGHTING	26
27	OFFICE COMPUTER RECEPTS		0.540		20/1	27	R	L	28	20/1		0.950		RECEPTION/CONF/OFFICE LTG	28
29	OFFICE GENERAL RECEPTS			0.540	20/1	29	R	L	30	20/1			0.250	TOILET ROOM LIGHTING	30
31	OFFICE FLOOR BOX	0.360			20/1	31	R	R	32	20/1	0.180			RECEPTION COPIER RECEPT	32
33	RECEPTION GENERAL RECEPTS		0.540		20/1	33	R	R	34	20/1		0.180		RECEPTION FRIDGE RECEPT	34
35	RECEPTION FLOOR BOX			0.360	20/1	35	R	R	36	20/1			0.180	RECEPTION MICROWAVE RECEP	36
37	CONFERENCE GENERAL RECEP	0.720			20/1	37	R		38	20/1				CONFERENCE ROOM TV RECEP	38
39	CONFERENCE FLOOR BOX		0.360		20/1	39	R		40	20/1				OFFICE TV RECEPT	40
41	ENTRANCE RECEPTS			0.360	20/1	41	R		42	20/1				ROOFTOP SERVICE RECEPT	42
31	SPARE				20/1	31	R		32	20/1				SPARE	32
33	SPARE				20/1	33	R		34	20/1				SPARE	34
35	SPARE				20/1	35	R		36	20/1				SPARE	36
37	PREPARED SPACE					37	R		38					PREPARED SPACE	38
39	PREPARED SPACE					39	R		40					PREPARED SPACE	40
41	PREPARED SPACE					41	R		42					PREPARED SPACE	42

LOAD SUMMARY		KVA CONNECTED A	B	C	KVA SUMMARY TOTAL		DEMAND	
RECEPTACLES	R	2.160	1.620	1.440	5.220		5.220	
LIGHTING	L	0.350	0.950	0.250	1.550	1.000	1.550	
HVAC	H	9.174	10.322	8.221	27.717	0.950	26.331	
OTHER	O	0.000	0.000	0.000	0.000	1.000	0.000	
EXISTING	E	0.000	0.000	0.000	0.000	1.000	0.000	
TOTAL KVA		11.684	12.892	9.911	34.487		33.101	TOTAL ESTIMATE KVA
VOLTS / PHASE		120	120	120	208		208	SYSTEM VOLTAGE
AMPS / PHASE		97.367	107.433	82.592	95.729		91.882	AMPS

NOTES:

EXISTING PNL 2

MAIN: SIZE & TYPE: 225 A MLO
BUS RATING: 200 A
VOLTAGE: 277 / 480 V 3 Ø, 4 WIRE
MOUNTING: SURFACE

PANEL LOCATION: SCIENCE B137
FEEDER SIZE: 200A
FED FROM: MSB (AREA D)
MIN RMS AMPS:

CKT #	CIRCUIT DESCRIPTION	LOAD (KVA) A	B	C	AMPS / POLES	CKT #	LOAD TYPE	CKT #	AMPS / POLES	LOAD (KVA) A	B	C	CIRCUIT DESCRIPTION	CKT #
1	B137,B134,B129 LIGHTS	4.030			20/1	1	E	E	2	20/1	1.952			B131,B101 LIGHTS	2
3	B105,B106,B102,B103,B104 LIGHT		3.275		20/1	3	H	E	4	20/1				SPARE	4
5	BLANK			2.700	20/1	5	E	E	6	20/1			3.100	B135,B141,B136,B140,B139 LIGHT	6
7	B107,B108 LIGHTS	2.300			20/1	7	E	E	8	20/1				B109 LIGHTS	8
9	SPARE				20/1	9	E	E	10	20/1				B133 LIGHTS	10
11	SPARE				20/1	11	E	E	12	20/1				BLANK	12
13	SPARE				20/1	13	E	E	14	20/1				SPARE	14
15	SPARE				20/1	15	E	E	16	20/1				SPARE	16
17	SPARE				20/1	17	E	E	18	20/1				SPARE	18
19	BLANK				20A	19	E	E	20	20A				BLANK	20
21	BLANK				/	21	E	E	22	/				BLANK	22
23	BLANK				3P	23	E	E	24	3P				BLANK	24
25	BLANK				20A	25	E	E	26	20A				BLANK	26
27	BLANK				/	27	E	E	28	/				BLANK	28
29	BLANK				3P	29	E	E	30	3P				BLANK	30
31	PANEL 2A	9.880			20A	31	E		32					EMPTY	32
33	PANEL 2A		10.510		/	33	E		34					EMPTY	34
35	PANEL 2A			10.710	3P	35	E		36					EMPTY	36
37	EMPTY					37			38					EMPTY	38
39	EMPTY					39			40					EMPTY	40
41	EMPTY					41			42					EMPTY	42

LOAD SUMMARY		KVA CONNECTED A	B	C	KVA SUMMARY TOTAL		DEMAND	
RECEPTACLES	R	0.000	0.000	0.000	0.000		0.000	
LIGHTING	L	0.000	0.000	0.000	0.000	1.000	0.000	
HVAC	H	0.000	0.000	0.000	0.000	0.950	0.000	
OTHER	O	0.000	0.000	0.000	0.000	1.000	0.000	
EXISTING	E	18.162	13.785	16.510	48.457	1.000	48.457	
TOTAL KVA		18.162	13.785	16.510	48.457		48.457	TOTAL ESTIMATE KVA
VOLTS / PHASE		277	277	277	480		480	SYSTEM VOLTAGE
AMPS / PHASE		65.567	49.765	59.603	58.286		58.286	AMPS

NOTES:

EXISTING PNL 2A

MAIN: SIZE & TYPE: 150 A MCB
BUS RATING: 150 A
VOLTAGE: 120 / 208 V 3 Ø, 4 WIRE
MOUNTING: SURFACE

PANEL LOCATION: SCIENCE B137
FEEDER SIZE: 150A
FED FROM: PANEL 2
MIN RMS AMPS:

CKT #	CIRCUIT DESCRIPTION	LOAD (KVA) A	B	C	AMPS / POLES	CKT #	LOAD TYPE	CKT #	AMPS / POLES	LOAD (KVA) A	B	C	CIRCUIT DESCRIPTION	CKT #
1	B131 PLUGS	0.900			20/1	1	E	E	2	20/1	0.930			B141 UNIT VENT	2
3	CLOCK PANEL		1.000		20/1	3	E	E	4	20/1		0.930		B137 UNIT VENT	4
5	FANS-SOUTH			0.720	20/1	5	E	E	6	20/1			0.930	B135 UNIT VENT	6
7	FIRE ALARM PANEL	1.000			20/1	7	E	E	8	20/1	0.930			B129 UNIT VENT	8
9	DOOR CLOSER B101		1.200		20/1	9	E	E	10	20/1		0.720		BLANK	10
11	B133 PLUGS			0.900	20/1	11	E	E	12	20/1			1.080	B135 TABLE PLUGS NE	12
13	B114E TECH PLUG STRIP	0.720			20/1	13	E	E	14	20/1	1.080			B135 TABLE PLUGS NW	14
15	B112,B113 TECH PLUG STRIP		0.720		20/1	15	E	E	16	20/1		1.080		B135 TABLE PLUGS SW	16
17	B114S,B115N TECH PLUG STRIP			0.720	20/1	17	E	E	18	20/1			1.200	B136 REFRIGERATOR	18
19	B115S TECH PLUG STRIP	0.720			20/1	19	E	E	20	20/1	1.200			B136 REFRIGERATOR	20
21	B134 MAGNETIC DOOR HOLD		0.500		20/1	21	E	E	22	20/1		1.000		B136 DISHWASHER	22
23	B137 SAFETY GOGGLE STATION			1.000	20/1	23	E	E	24	20/1			0.720	B136 PLUG	24
25	B129 NORHT, SOUTH, WEST, PL	0.900			20/1	25	E	E	26	20/1				B137 PLUG	26
27	B129 TABLE PLUGS		0.540		20/1	27	E	E	28	30A				SURGE ARRESTOR IN PNL	28
29	B129 SAFETY GOGGLE STATION			1.000	20/1	29	E	E	30	/				SURGE ARRESTOR IN PNL	30
31		1.000			20/1	31	E	E	32	3P	0.500			SURGE ARRESTOR IN PNL	32
33			1.080		20/1	33	E	E	34	20/1		1.740		RM 354 POWER POLE	34
35	POWER POLE LIBRARY				20/1	35	E	E	36	20/1			1.740	RM 354 POWER POLE	36
37	POWER POLE LIBRARY				20/1	37	E	E	38	20/1				BLANK	38
39	BLANK				20/1	39	E	E	40	20/1				BLANK	40
41	B136 EXHUAST FAN			0.700	20/1	41	E	E	42	20/1				BLANK	42

LOAD SUMMARY		KVA CONNECTED A	B	C	KVA SUMMARY TOTAL		DEMAND	
RECEPTACLES	R	0.000	0.000	0.000	0.000		0.000	
LIGHTING	L	0.000	0.000	0.000	0.000	1.000	0.000	
HVAC	H	0.000	0.000	0.000	0.000	0.950	0.000	
OTHER	O	0.000	0.000	0.000	0.000	1.000	0.000	
EXISTING	E	9.880	10.510	10.710	31.100	1.000	31.100	
TOTAL KVA		9.880	10.510	10.710	31.100		31.100	TOTAL ESTIMATE KVA
VOLTS / PHASE		120	120	120	208		208	SYSTEM VOLTAGE
AMPS / PHASE		82.333	87.583	89.250	86.328		86.328	AMPS

NOTES:

EXISTING PNL 3

MAIN: SIZE & TYPE: 225 A MLO
BUS RATING: 225 A
VOLTAGE: 277 / 480 V 3 Ø, 4 WIRE
MOUNTING: SURFACE

PANEL LOCATION: CORRIDOR C130
FEEDER SIZE: 200A
FED FROM: MSB (AREA D)
MIN RMS AMPS:

CKT #	CIRCUIT DESCRIPTION	LOAD (KVA) A	B	C	AMPS / POLES	CKT #	LOAD TYPE	CKT #	AMPS / POLES	LOAD (KVA) A	B	C	CIRCUIT DESCRIPTION	CKT #
1	EX CIRCUIT				20/1	1	E	E	2	20/1	2.170			RM 348 LIGHTS	2
3	EX CIRCUIT				20/1	3	E	E	4	20/1				EX CIRCUIT	4
5	RM 349 LIGHTS				20/1	5	E	E	6	20/1				HALL LIGHTS	6
7	RM 356 LIGHTS				20/1	7	E	E	8	20/1				RM 346 LIGHTS	8
9	RM 347-354 LIGHTS				20/1	9	E	E	10	20/1				RM 344 LIGHTS	10
11	SPARE				20/1	11	E		12	20/1			0.680	HOME EC ROOM LIGHTING	12
13	SPARE	9.820			20/1	13	E		14					EMPTY	14
15	EMPTY		12.670			15	E		16					EMPTY	16
17	EMPTY			9.620		17	E		18					EMPTY	18
19	EMPTY				20/1	19		E	20	20A				EX CIRCUIT	20
21	EMPTY				20/1	21	E	E	22	/				EX CIRCUIT	22
23	EMPTY				20/1	23		E	24	3P				EX CIRCUIT	24
25	EX CIRCUIT				20A	25	E	E	26	40A				EX CIRCUIT	26
27	EX CIRCUIT				/	27	E	E	28	/				EX CIRCUIT	28
29	EX CIRCUIT				3P	29	E	E	30	3P				EX CIRCUIT	30
31	EMPTY					31			32	20A				EX CIRCUIT	32
33	EMPTY					33			34	/				EX CIRCUIT	34
35	EMPTY					35			36	3P				EX CIRCUIT	36
37	EX CIRCUIT				40A	37	E	E	38	70A	13.320			PANEL 3A	38
39	EX CIRCUIT				/	39	E	E	40	/		13.320		PANEL 3A	40
41	EX CIRCUIT				3P	41	E	E	42	3P			13.320	PANEL 3A	42

LOAD SUMMARY		KVA CONNECTED A	B	C	KVA SUMMARY TOTAL		DEMAND	
RECEPTACLES	R	0.000	0.000	0.000	0.000		0.000	
LIGHTING	L	0.000	0.000	0.000	0.000	1.000	0.000	
HVAC	H	0.000	0.000	0.000	0.000	0.950	0.000	
OTHER	O	0.000	0.000	0.000	0.000	1.000	0.000	
EXISTING	E	25.310	25.990	22.940	74.241	1.000	74.241	
TOTAL KVA		25.310	25.990	22.940	74.241		74.241	TOTAL ESTIMATE KVA
VOLTS / PHASE		277	277	277	480		480	SYSTEM VOLTAGE
AMPS / PHASE		91.373	93.827	82.817	89.300		89.300	AMPS

NOTES:

EXISTING PNL 3A

MAIN: SIZE & TYPE: 225 A MCB
BUS RATING: 225 A
VOLTAGE: 120 / 208 V 3 Ø, 4 WIRE
MOUNTING: SURFACE

PANEL LOCATION: CORRIDOR C130
FEEDER SIZE: 225A
FED FROM: PANEL 3
MIN RMS AMPS:

CKT #	CIRCUIT DESCRIPTION	LOAD (KVA) A	B	C	AMPS / POLES	CKT #	LOAD TYPE	CKT #	AMPS / POLES	LOAD (KVA) A	B	C	CIRCUIT DESCRIPTION	CKT #
1	**SPARE**				40A	1	E	E	2	20/1	0.920			PLUG STRIP S WALL 346	2
3	**SPARE**				2P	3	E	E	4	20/1		1.080		RM 345 S WALL PLUG	4
5	**KILN EXHAUST EF-5**			**0.360**	**20A**	5	H		6	40A				**SPARE**	6
7	**HC-2**	**1.333**			**20A**	7	H	E	8	2P				**SPARE**	8
9	**HC-2**		**1.333**		/	9	H	E	10	40A		3.700		NEW PANEL FEED	10
11	**HC-2**			**1.333**	**3P**	11	H	E	12	2P			3.700	NEW PANEL FEED	12
13	**ERV-2**	**0.405**			**15A/**	13	H	E	14	20/1	1.080			N WALL RM 349 COMP PLUG	14
15	**ERV-2**		**0.405**		**2P**	15	H	E	16	20/1		0.930		PLUG RM 354 PLUG STRIP 347	16
17	W&N PLUGS 346 S. WALL PLUG			0.720	20/1	17	E	E	18	20/1			1.080	S&W WALL PLUG STRIP RM 356	18
19	W&N PLUGS 346	0.500			20/1	19	E	E	20	20/1	0.900			N WALL PLUG STRIP RM 356	20
21	W PLUG 348		0.500		20/1	21	E	E	22	20/1		1.260		COPY MACHINE RM 345	22
23	GARBAGE DISPOSAL FREEZER			0.900	20/1	23	E	E	24	20/1			0.720	RM 345 W WALL PLUG	24
25	COMP. RM PLUG 354 FILE RM	0.900			20/1	25	E	E	26	20/1	1.260			HALL PLUG	26
27	W WALL COMP PLUG RM 354		1.080		20/1	27	E	E	28	20/1		1.080		COMP PLUG 346 PLUGS RM 348	28
29	BOYS HAND DRYER			0.720	20A	29	E	E	30	20/1				ISLAND RANG TOP RM 344	30
31	BOYS HAND DRYER	1.080			2P	31	E	E	32	20/1	**0.180**			**ROOFTOP SERVICE RECEPTACL**	32
33	SPARE		3.200		X	33		E	34	20/1		0.720		BREAK RM PLUG RM 345	34
35	GIRLS HAND DRYER			3.200	20/1	35	E	E	36	20/1				UH RM 346, 349	36
37	W WALL PLUG STRIP 349	2.280			25A	37	E	E	38	20/1				GARBAGE DISPOSAL, PLUG 344	38
39	COMP PLUG RM 343		2.280		/	39	E	E	40	20/1				N COMP PLUS RM 343	40
41	E WALL PLUG STRIP 349			2.280	3P	41	E	E	42	20/1				BLANK	42

LOAD SUMMARY		KVA CONNECTED A	B	C	KVA SUMMARY TOTAL		DEMAND	
RECEPTACLES	R	0.000	0.000	0.000	0.000		0.000	
LIGHTING	L	0.000	0.000	0.000	0.000	1.000	0.000	
HVAC	H	1.738	1.738	1.693	5.169	0.950	4.911	
OTHER	O	0.000	0.000	0.000	0.000	1.000	0.000	
EXISTING	E	9.100	12.630	13.320	35.050	1.000	35.050	
TOTAL KVA		10.838	14.368	15.013	40.219		39.961	TOTAL ESTIMATE KVA
VOLTS / PHASE		120	120	120	208		208	SYSTEM VOLTAGE
AMPS / PHASE		90.317	119.733	125.108	111.640		110.923	AMPS

NOTES: 1. FOR ALL BOLDED ITEMS, FURNISH AND INSTALL NEW CIRCUIT BREAKER.

EXISTING PNL 4

MAIN: SIZE & TYPE: 225 A MLO
BUS RATING: 225 A
VOLTAGE: 277 / 480 V 3 Ø, 4 WIRE
MOUNTING: RECESSED

PANEL LOCATION: INSTRUMENT STORAGE D115
FEEDER SIZE: 200A
FED FROM: MSB (AREA D)
MIN RMS AMPS:

CKT #	CIRCUIT DESCRIPTION	LOAD (KVA) A	B	C	AMPS / POLES	CKT #	LOAD TYPE	CKT #	AMPS / POLES	LOAD (KVA) A	B	C	CIRCUIT DESCRIPTION	CKT #
1	SPACE				20/1	1	E	E	2	20/1				EXISTING CIRCUIT	2
3	EX XFMR PANEL 4A		3.300		50A	3	E		4	20/1				EXISTING CIRCUIT	4
5	EX XFMR PANEL 4A			3.360	/	5	E	E	6	20/1			2.160	EX LTG E123,124,15,126,127	6
7	EX XFMR PANEL 4A	4.680			3P	7		E	8	20/1				SPACE	8
9	EX CIRCUIT				40A	9			10	20A				EXISTING CIRCUIT	10
11	EX CIRCUIT				/	11			12	/				EXISTING CIRCUIT	12
13	EX CIRCUIT				3P	13			14	3P				EXISTING CIRCUIT	14
15	EX CIRCUIT				20A	15		E	16	20/1		2.600		EX LTG D106, 107, 108	16
17	EX CIRCUIT				/	17		E	18	20/1			3.150	EX LTG D109, 110,111,112,113,126	18
19	EX CIRCUIT				3P	19		E	20	20/1	0.700			EX LTG D127	20
21	EX CIRCUIT				30A	21			22	20/1				SPARE	22
23	EX CIRCUIT				/	23			24	20/1				SPARE	24
25	EX CIRCUIT				3P	25		E	26	20/1				SPARE	26
27	SPARE				20/1	27			28	20/1				SPARE	28
29	SPARE				20/1	29			30	20/1				SPARE	30
31	SPARE				20/1	31			32	20/1				SPARE	32
33	SPACE				20/1	33			34	20/1				SPACE	34
35	SPACE				20/1	35			36	20/1				SPACE	36
37	SPACE				20/1	37			38	20/1				SPACE	38
39	SPACE				20/1	39			40	20/1				SPACE	40
41	SPACE				20/1	41			42	20/1				SPACE	42

LOAD SUMMARY		KVA CONNECTED A	B	C	KVA SUMMARY TOTAL		DEMAND	
RECEPTACLES	R	0.000	0.000	0.000	0.000		0.000	
LIGHTING	L	0.000	0.000	0.000	0.000	1.000	0.000	
HVAC	H	0.000	0.000	0.000	0.000	0.950	0.000	
OTHER	O	0.000	0.000	0.000	0.000	1.000	0.000	
EXISTING	E	5.380	5.900	8.670	19.950	1.000	19.950	
TOTAL KVA		5.380	5.900	8.670	19.950		19.950	TOTAL ESTIMATE KVA
VOLTS / PHASE		277	277	277	480		480	SYSTEM VOLTAGE
AMPS / PHASE		19.422	21.300	31.300	23.997		23.997	AMPS

NOTES:

EXISTING PNL 4A

MAIN: SIZE & TYPE: 100 A MCB
BUS RATING: 100 A
VOLTAGE: 120 / 208 V 3 Ø, 4 WIRE
MOUNTING: SURFACE

PANEL LOCATION: INSTRUMENT STORAGE D115
FEEDER SIZE: 100A
FED FROM: PANEL 4
MIN RMS AMPS:

CKT #	CIRCUIT DESCRIPTION	LOAD (KVA) A	B	C	AMPS / POLES	CKT #	LOAD TYPE	CKT #	AMPS / POLES	LOAD (KVA) A	B	C	CIRCUIT DESCRIPTION	CKT #
1	EX RM D122 RECEPT	0.720			20/1	1	E	E	2	20/1	1.080			EX UV-18, UV-19	2
3	EX RMS D115,116,117,118 REC		0.900		20/1	3	E	E	4	20/1		1.080		EXISTING FANS	4
5	EX RMS B125,126,127 RECEPT			1.260	20/1	5	E	E	6	20/1			0.900	EX RMS B128,D122 RECEPT	6
7	EX RMS D116,117,118 RECEPT	1.080			20/1	7	E	E	8	20/1	1.080			EX RMS D119,120,121 RECEPT	8
9	EX RM D113 RECEPT		0.720		20/1	9	E		10	20/1					10
11	EX RM D113 RECEPT			0.720	20/1	11	E		12	20/1				EXISTING CIRCUIT	12
13	EX RMS D113,126 RECEPTS	0.720			20/1	13	E		14	20/1				EXISTING CIRCUIT	14
15	EXISTING CIRCUIT				20/1	15		E	16	20/1		0.600		EX UV-40	16
17	EXISTING CIRCUIT				20/1	17		E	18	20/1			0.480	EX UV-43	18
19	SPARE				20/1	19			20	20/1				SPARE	20
21	SPARE				20/1	21			22	20/1				SPARE	22
23	SPARE				20/1	23			24	20/1				SPARE	24
25	SPARE				20/1	25			26	20/1				SPARE	26
27	SPARE				20/1	27			28	20/1				SPARE	28
29	SPARE				20/1	29			30	20/1				SPARE	30
31	SPARE				20/1	31			32	20/1				SPARE	32
33	SPACE				20/1	33			34	20/1				SPACE	34
35	SPACE				20/1	35			36	20/1				SPACE	36
37	SPACE				20/1	37			38	20/1				SPACE	38
39	SPACE				20/1	39			40	20/1				SPACE	40
41	SPACE				20/1	41			42	20/1				SPACE	42

LOAD SUMMARY		KVA CONNECTED A	B	C	KVA SUMMARY TOTAL		DEMAND	
RECEPTACLES	R	0.000	0.000	0.000	0.000		0.000	
LIGHTING	L	0.000	0.000	0.000	0.000	1.000	0.000	
HVAC	H	0.000	0.000	0.000	0.000	0.950	0.000	
OTHER	O	0.000	0.000	0.000	0.000	1.000	0.000	
EXISTING	E	4.680	3.300	3.360	11.340	1.000	11.340	
TOTAL KVA		4.680	3.300	3.360	11.340		11.340	TOTAL ESTIMATE KVA
VOLTS / PHASE		120	120	120	208		208	SYSTEM VOLTAGE
AMPS / PHASE		39.000	27.500	28.000	31.478		31.478	AMPS

NOTES:

EXISTING PNL LP-E1

MAIN: SIZE & TYPE: 225 A MLO
BUS RATING: 225 A
VOLTAGE: 120 / 208 V 3 Ø, 4 WIRE
MOUNTING: SURFACE

PANEL LOCATION: BOILER ROOM
FEEDER SIZE: 225A
FED FROM: MSB-A
MIN RMS AMPS:

CKT #	CIRCUIT DESCRIPTION	LOAD (KVA) A	B	C	AMPS / POLES	CKT #	LOAD TYPE	CKT #	AMPS / POLES	LOAD (KVA) A	B	C	CIRCUIT DESCRIPTION	CKT #
1	EX MUA-1	0.950			20A	1	E	E	2	20/1	2.610			EX LIGHTING A102	2
3	EX MUA-1		0.950		/	3	E	E	4	20/1		2.030		EX LIGHTING A103	4
5	EX MUA-1			0.950	3P	5	E	E	6	20/1			2.944	EX LIGHTING A124,125	6
7	EX EF-K1	1.330			20A	7	E	E	8	20/1	3.328			EX LIGHTING A122,123	8
9	EX EF-K1		1.330		/	9	E	E	10	20/1		3.250		EX LTG A106A (WB,B7,08,09,10,11,12,25	10
11	EX EF-K1			1.330	3P	11	E	E	12	20/1			3.195	EX LTG A104,118,117,119,120,121	12
13	EX EF-K3	0.830			20A	13	E	E	14	30/1	**0.900**			**NEW GYM A101 ZONE 1 LIGHTIN**	14
15	EX EF-K3		0.830		/	15	E	E	16	30/1		**0.900**		**NEW GYM A101 ZONE 2 LIGHTIN**	16
17	EX EF-K3			0.830	3P	17	E	E	18	30/1			**0.600**	**NEW GYM A101 ZONE 3 LIGHTIN**	18
19	EX EXTERIOR LTG CONTACTOR	0.604			20/1	19	E	E	20	30/1	**0.750**			**NEW GYM A101 ZONE 4 LIGHTIN**	20
21	EX EXTERIOR LTG CONTACTOR		0.720		20/1	21	E	E	22	20/1		**1.050**		**NEW GYM A101 ZONE 5 LIGHTIN**	22
23	E

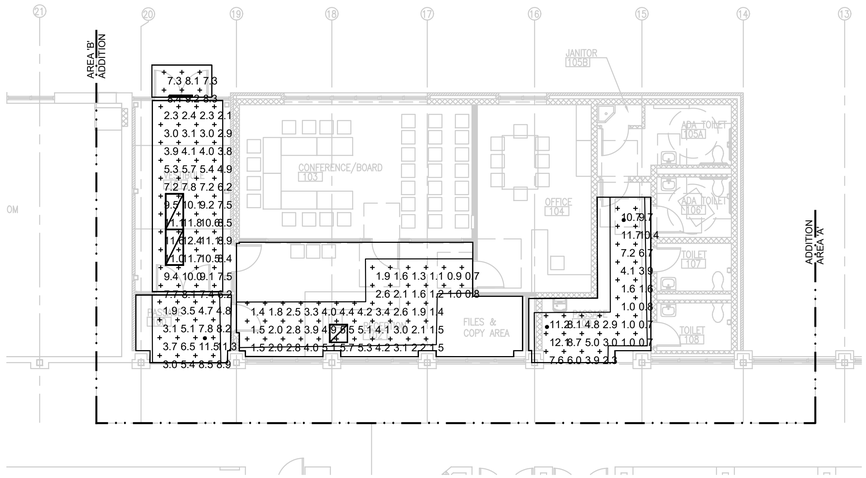

FIRST FLOOR PLAN 'ADDITION' - EMERGENCY LIGHTING POINT BY POINT

1/8" = 1'-0"

Statistics						
Description	Symbol	Avg	Max	Min	Max/Min	Avg/Min
101	+	7.2 fc	12.4 fc	2.1 fc	5.9:1	3.4:1
Exit Lighting	+	8.1 fc	9.2 fc	7.3 fc	1.3:1	1.1:1
Passage 100	+	6.1 fc	11.5 fc	1.9 fc	6.1:1	3.2:1
Passage 109	+	5.3 fc	12.1 fc	0.7 fc	17.3:1	7.6:1
Reception 102	+	2.7 fc	5.7 fc	0.7 fc	8.1:1	3.9:1

STATE OF MICHIGAN
August 28, 2026
MAI #2026-01014

KEY PLAN

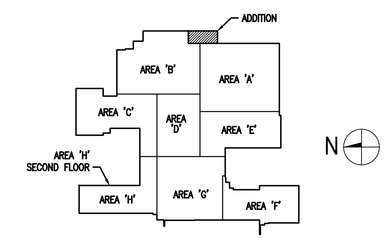

MACMILLAN ASSOCIATES
CONSULTING ENGINEERS
714 EAST MIDLAND STREET • BAY CITY, MICHIGAN 48706
(989) 894-4300 F (989) 894-9930 WWW.MACMILLANASSOCIATES.COM

INTEGRATED DESIGNS INC.
ARCHITECTURE
ENGINEERING
CONSULTING
MARQUETTE OFFICE:
1021 W. BARAGA AVENUE
MARQUETTE, MI 49855
PHONE: (906)228-7524
FAX: (906)228-7524
BRIGHTON OFFICE:
8011 W. GRAND RIVER AVE., SUITE 600
BRIGHTON, MI 48116
PHONE: (810)229-2701
FAX: (810)229-4787

HARBOR BEACH PUBLIC SCHOOLS
PHASE 1 - 2026 ADDITION & RENOVATIONS
HARBOR BEACH, MICHIGAN
PROJECT NO. 24-128

	BY	DATE
DESIGN	BS	08/28/26
DRAWN	RLM	08/28/26
CHECKED	BS	08/28/26
APPROVED	JWF	08/28/26

NO.	REVISIONS	DATE
0	FOR CONSTRUCTION	08/28/26

FIRST FLOOR PLAN 'ADDITION' - EMERGENCY LIGHTING POINT BY POINT

COPYRIGHT © 2025 INTEGRATED DESIGNS INC.

E6.1

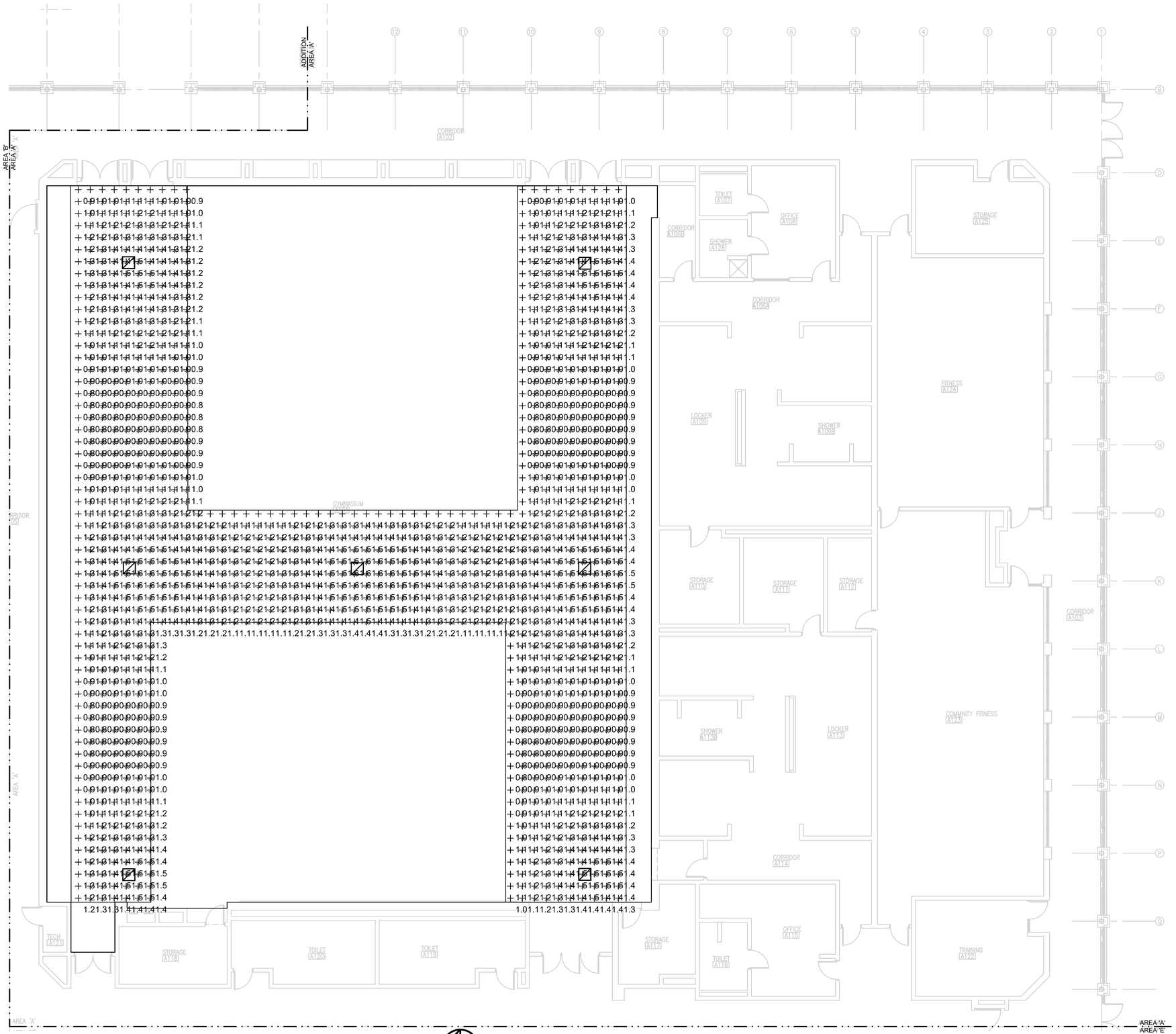

FLOOR PLAN AREA 'A' - EMERGENCY LIGHTING POINT BY POINT

1/8"=1'-0"

Statistics						
Description	Symbol	Avg	Max	Min	Max/Min	Avg/Min
Gymnasium A101	+	1.2 fc	1.6 fc	0.8 fc	2.0:1	1.5:1

STATE OF MICHIGAN

August 28, 2026
MAI #2026-01014

KEY PLAN

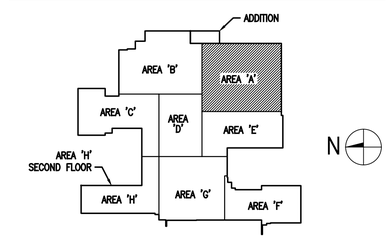

MACMILLAN ASSOCIATES
CONSULTING ENGINEERS
714 EAST MIDLAND STREET • BAY CITY, MICHIGAN 48706
(989) 894-4300 F (989) 894-9930 WWW.MACMILLANASSOCIATES.COM

INTEGRATED DESIGNS INC.
ARCHITECTURE ENGINEERING CONSULTING

MARQUETTE OFFICE:
1021 W. BARAGA AVENUE
MARQUETTE, MI 49855
PHONE: (906)228-4660
FAX: (906)228-7524

BRIGHTON OFFICE:
8011 W. GRAND RIVER AVE., SUITE 600
BRIGHTON, MI 48116
PHONE: (810)229-2701
FAX: (810)229-4787

HARBOR BEACH PUBLIC SCHOOLS
PHASE 1 - 2026 ADDITION & RENOVATIONS
HARBOR BEACH, MICHIGAN
PROJECT NO. 24-128

	BY	DATE
DESIGN	BS	08/28/26
DRAWN	RLM	08/28/26
CHECKED	BS	08/28/26
APPROVED	JWF	08/28/26

NO.	REVISIONS	DATE
0	FOR CONSTRUCTION	08/28/26

FLOOR PLAN AREA 'A' - EMERGENCY LIGHTING POINT BY POINT

COPYRIGHT © 2025 INTEGRATED DESIGNS INC.

E6.2

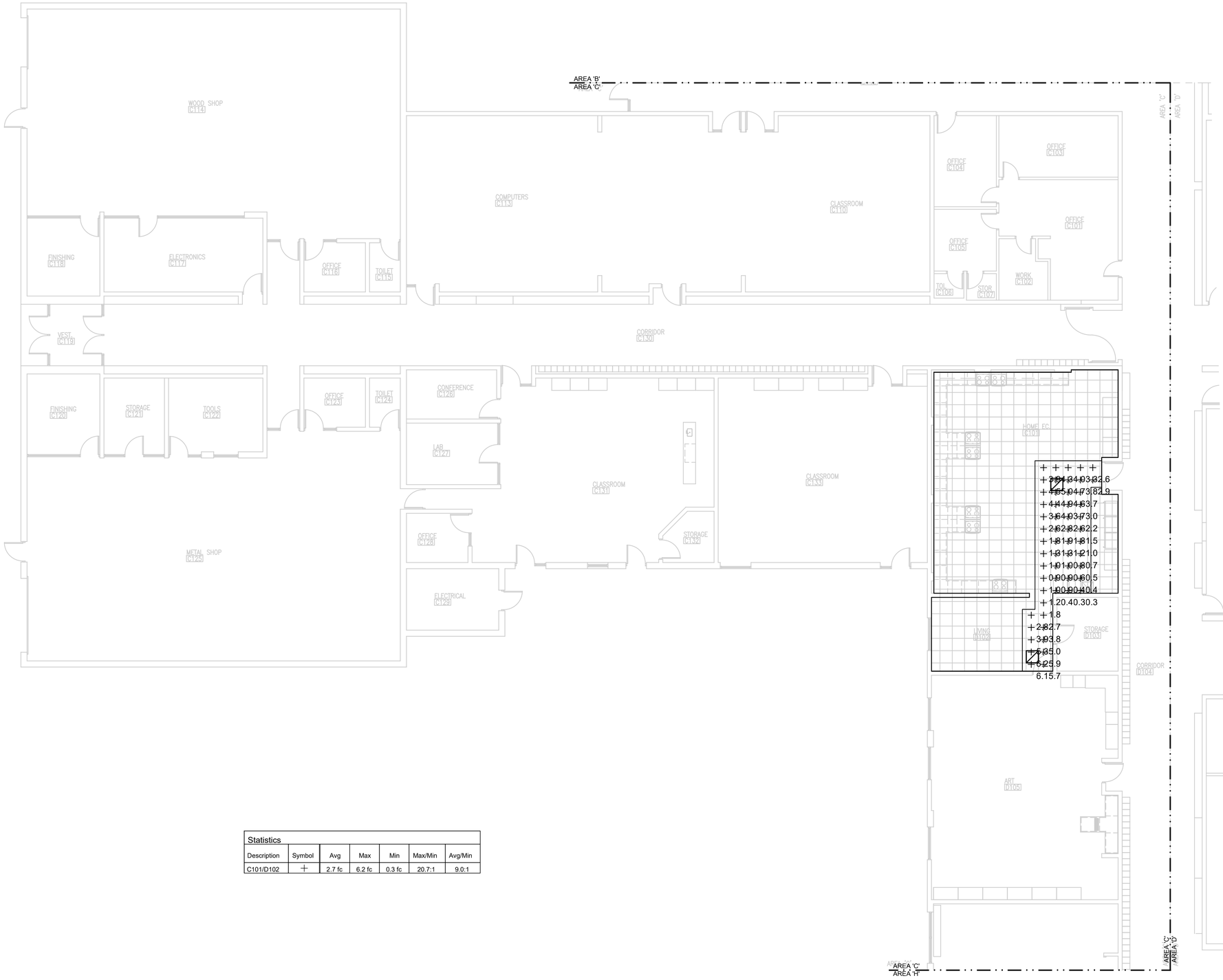

Statistics						
Description	Symbol	Avg	Max	Min	Max/Min	Avg/Min
C101/D102	+	2.7 fc	6.2 fc	0.3 fc	20.7:1	9.0:1

FLOOR PLAN AREA 'C' - EMERGENCY LIGHTING POINT BY POINT
1/8"=1'-0"

STATE OF MICHIGAN
JAMES W. FIDLER
No. 6201053
LICENSED PROFESSIONAL ENGINEER
August 28, 2026
MAI #2026-01014

KEY PLAN

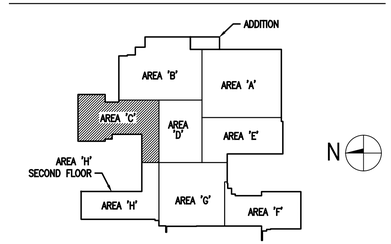

MACMILLAN ASSOCIATES
CONSULTING ENGINEERS
714 EAST MIDLAND STREET • BAY CITY, MICHIGAN 48706
(989) 894-4300 F (989) 894-9930 WWW.MACMILLANASSOCIATES.COM

ARCHITECTURE
ENGINEERING
CONSULTING
INTEGRATED DESIGNS INC.
MARQUETTE OFFICE:
1021 W. BARAGA AVENUE
MARQUETTE, MI 49855
PHONE: (906)228-7524
FAX: (906)228-7524
BIRGHTON OFFICE:
8011 W. GRAND RIVER AVE., SUITE 600
BRIGHTON, MICHIGAN 48116
PHONE: (810)229-2701
FAX: (810)229-4787

HARBOR BEACH PUBLIC SCHOOLS
PHASE 1 - 2026 ADDITION & RENOVATIONS
HARBOR BEACH, MICHIGAN
PROJECT NO. 24-128

	BY	DATE
DESIGN	BS	08/28/26
DRAWN	RLM	08/28/26
CHECKED	BS	08/28/26
APPROVED	JWF	08/28/26

NO.	REVISIONS	DATE
0	FOR CONSTRUCTION	08/28/26

FLOOR PLAN AREA 'C' - EMERGENCY LIGHTING POINT BY POINT

COPYRIGHT © 2025 INTEGRATED DESIGNS INC.

E6.3

FLOOR PLAN AREA 'G' - EMERGENCY LIGHTING POINT BY POINT

1/8"=1'-0"

Statistics						
Description	Symbol	Avg	Max	Min	Max/Min	Avg/Min
Area 'G' Statistics	+	2.2 fc	3.5 fc	0.4 fc	8.8:1	5.5:1

STATE OF MICHIGAN

August 28, 2026
MAI #2026-01014

KEY PLAN

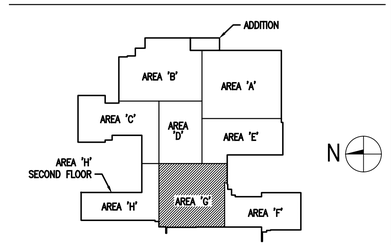

MACMILLAN ASSOCIATES
CONSULTING ENGINEERS
714 EAST MIDLAND STREET • BAY CITY, MICHIGAN 48706
(989) 894-4300 F (989) 894-9930 WWW.MACMILLANASSOCIATES.COM

INTEGRATED DESIGNS INC.
ARCHITECTURE
ENGINEERING
CONSULTING
MARQUETTE OFFICE:
1021 W. BARAGA AVENUE
MARQUETTE, MI 49855
PHONE: (906)228-7524
FAX: (906)228-7524
BRIGHTON OFFICE:
8011 W. GRAND RIVER AVE., SUITE 600
BRIGHTON, MI 48116
PHONE: (810)229-2701
FAX: (810)229-8787

HARBOR BEACH PUBLIC SCHOOLS
PHASE 1 - 2026 ADDITION & RENOVATIONS
HARBOR BEACH, MICHIGAN
PROJECT NO. 24-128

NO.	REVISIONS	DATE
0	FOR CONSTRUCTION	08/28/26

	BY	DATE
DESIGN	BS	08/28/26
DRAWN	RLM	08/28/26
CHECKED	BS	08/28/26
APPROVED	JWF	08/28/26

FLOOR PLAN AREA 'G' - EMERGENCY LIGHTING POINT BY POINT

COPYRIGHT © 2025 INTEGRATED DESIGNS INC.

E6.4

WENGER GENERAL NOTES FOR THIS PROJECT:

1. VERIFICATION OF BUILDING DIMENSIONS TO BE CONFIRMED BY GENERAL CONTRACTOR PRIOR TO CONSTRUCTION. PRODUCT IS PREFABRICATED IN STANDARD SIZES.
2. WALL/FLOOR AREA SPECIFIED FOR PRODUCT INSTALLATION MUST BE FREE OF OBSTRUCTIONS SUCH AS LIGHT SWITCHES, OUTLETS, HVAC, CLOCKS, SIGNS, ETC.
3. CLOSURE PANELS IN THE SELECTED COLOR COMBINATION ARE INCLUDED IN BID PRICE AND SHOWN AS PER DRAWING. ALL CHANGES TO APPROVED WENGER LAYOUT ON SITE OR AFTER INSTALLATION WILL INCUR ADDITIONAL CHARGES.
4. END COVER PANELS ARE INCLUDED IN BID PRICE AND SHOWN AS PER DRAWING. SEE INDIVIDUAL ROOM DRAWING FOR COLOR COMBINATION.
5. WENGER OFFERS STANDARD COLOR COMBINATIONS AS SHOWN ON CABINETS: COLOR SAMPLE CARD. NO OTHER OPTIONS AVAILABLE.

WENGER GENERAL CABINET NOTES:

1. IN AN AREA WHERE SOFFITS ARE TO BE CONSTRUCTED ABOVE WENGER CABINETS, A ROUGH OPENING HEIGHT OF 7'-6" IS REQUIRED FOR CABINET INSTALLATION.
2. CABINET DOORS HAVE LATCHES READY TO RECEIVE STANDARD PADLOCKS. PADLOCKS ARE NOT INCLUDED.
3. CABINETS ARE REPRESENTED IN THE FLOOR PLAN AT NOMINAL WIDTHS. AS A RESULT, SLIGHTLY MORE SPACE IS RESERVED THAN WHAT IS REQUIRED IN THE FIELD. THIS IS INTENDED TO REDUCE THE POTENTIAL FOR INTERFERENCES DURING INSTALLATION.
4. FOR RESULTING GAPS BETWEEN THE SIDE OF THE CABINET AND THE WALL, WENGER SUGGESTS RESERVING A MINIMUM 3" OF CLEARANCE FOR INSTALLATION OF CLOSURE PANELS. THESE CLOSURE PANELS ARE INDICATED WITHIN THE FLOOR PLAN WHERE APPLICABLE. WENGER WILL NOT INSTALL CLOSURE PANELS IN RESULTING GAPS LESS THAN 3" WIDE.

WENGER ACOUSTICABINET NOTES:

1. WATERFALL DESIGN ON GRILLE DOORS MINIMIZE CUBIC VOLUME LOSS AND REDUCE VIBRATION.
2. ACOUSTICALLY ABSORPTIVE MATERIAL HELPS ELIMINATE SOUND REFLECTION.

INDEX OF DRAWINGS

SHEET	DRAWING TITLE
1	COVER SHEET - GENERAL NOTES
2	BAND D122 - PLAN & ELEVATION

REV	DATE	DRN BY	REVISION DESCRIPTION
1	08/12/26	TC	INITIAL RELEASE
2	08/26/26	EK	UPDATED PER CUTOMER REQUEST

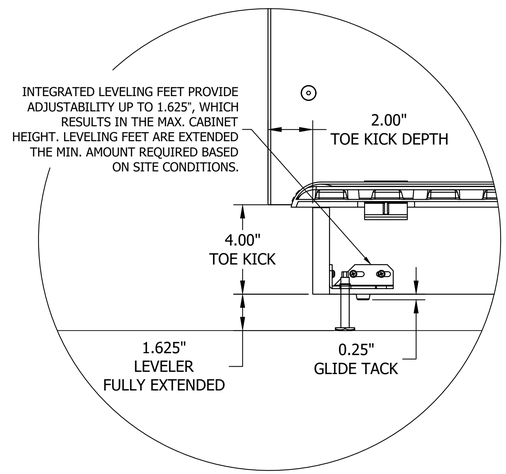

CABINET TOE KICK SECTION DETAIL

SIGNATURE REQUIRED

END COVER & CLOSURE PANELS IN THE SELECTED COLOR COMBINATION ARE INCLUDED IN BID PRICE AND SHOWN AS PER DRAWING. ALL CHANGES TO APPROVED WENGER LAYOUT ON SITE OR AFTER INSTALLATION WILL INCUR ADDITIONAL CHARGES.

SIGNATURE: _____

DATE: _____

Wenger CORPORATION

Wenger GEARBOSS JRCLANCY creative conners TSC TEXAS SEATING COMPANY

THIS DRAWING AND RELATED SPECIFICATIONS ARE CONFIDENTIAL AND PROPRIETARY TO THE WENGER CORPORATION.
COPYRIGHT 2026 WENGER CORPORATION ALL RIGHTS RESERVED

Harbor Beach High School

HARBOR BEACH
MI, 48441

☐ REVIEWED AND APPROVED
☐ REVISE AND RESUBMIT
☐ REVIEWED AND APPROVED WITH COMMENTS

SIGNATURE _____ DATE _____

WORKMANSHIP STANDARD
PCD-0009

TOLERANCE SPECIFICATION
ES52001

ENGINEERING SPECIFICATION

FINISH:	WEIGHT: -	ORDER:

THIRD ANGLE PROJECTION PER ASME Y14.3

DRAWING TITLE:
COVER SHEET - GENERAL NOTES

PROJECT/OPPORTUNITY NUMBER:
20451484

SCALE: DO NOT SCALE DRAWING

DATE	DRN BY	CHK BY	APVD BY
08/12/26	TC	EK	TC

DRAWING NUMBER: 26P14961
REV: 2

WENGER PRODUCTS	
QTY.	DESCRIPTION
1	#02 ACOUSTICABINET
3	#04 ACOUSTICABINET
3	#05 ACOUSTICABINET
1	#10 ACOUSTICABINET
3	#10N ACOUSTICABINET
2	#11N ACOUSTICABINET
2	#12 ACOUSTICABINET
1	#23 ACOUSTICABINET
1	#47N ACOUSTICABINET
17	TOTAL

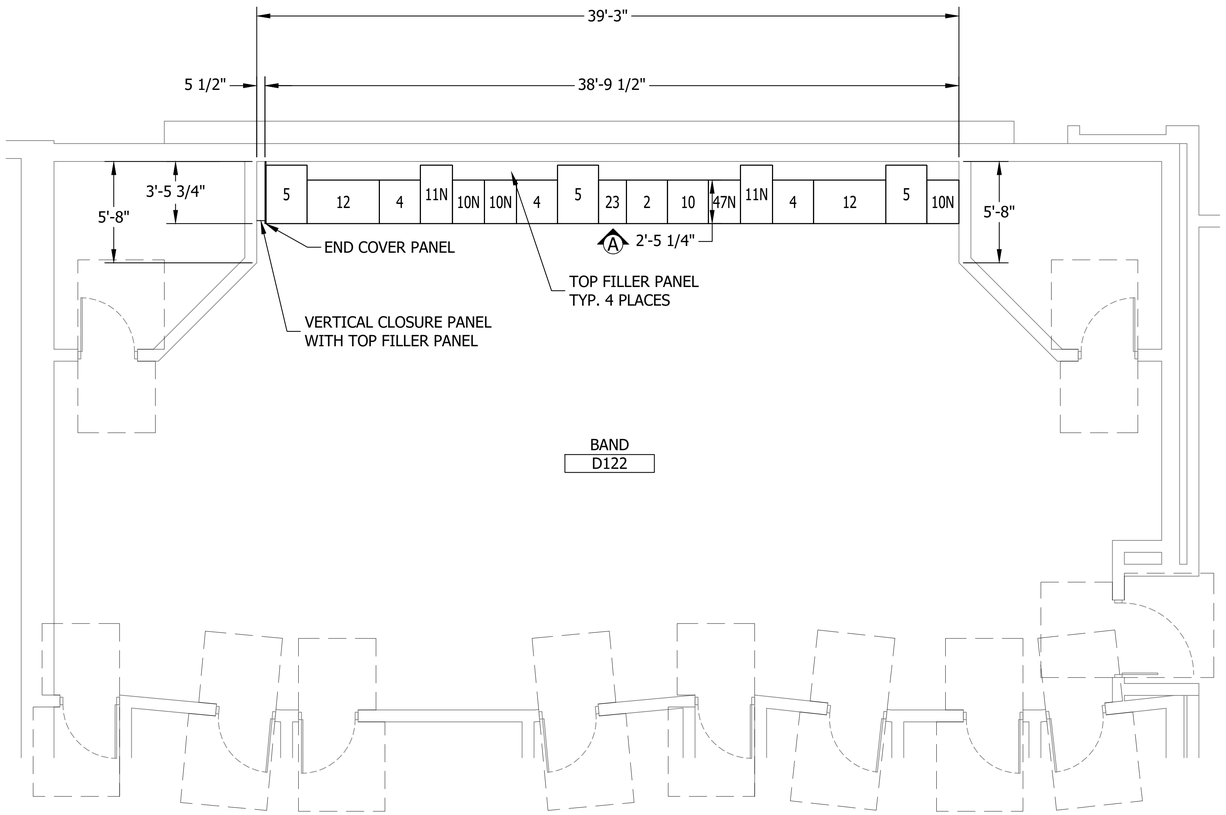

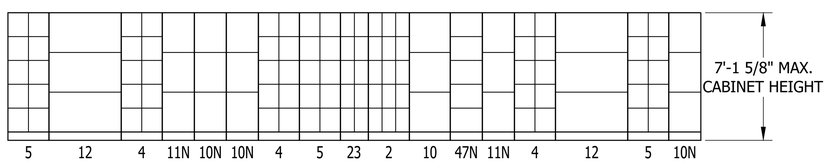

VIEW "A"

BOX A	CABINET COLOR SCHEDULE TO BE SELECTED FROM WENGER STANDARD COLOR COMBINATIONS. COLOR SCHEDULE SELECTED _____
BOX B	PRODUCTS TO BE CONSTRUCTED OF COMPOSITE WOOD.
BOX C	CABINET DOOR OPTIONS: DOOR STYLE: COMPARTMENT WATERFALL GRILLE DOORS (TO MATCH COLOR SCHEDULE AS INDICATED IN BOX A.) DOOR SWING: HINGED LEFT (EXCLUDING CABINETS USING DBL DOORS)

Wenger CORPORATION

Wenger GEARBOSS JRCLANCY creative conners TSC TEXAS SEATING COMPANY

THIS DRAWING AND RELATED SPECIFICATIONS ARE CONFIDENTIAL AND PROPRIETARY TO THE WENGER CORPORATION.
COPYRIGHT 2026 WENGER CORPORATION ALL RIGHTS RESERVED

Harbor Beach High School

HARBOR BEACH
MI, 48441

WORKMANSHIP STANDARD
PCD-0009

TOLERANCE SPECIFICATION
ES52001

ENGINEERING SPECIFICATION

FINISH:	WEIGHT:	ORDER:
	-	

THIRD ANGLE PROJECTION PER ASME Y14.3

DRAWING TITLE:
ACOUSTICABINET LAYOUT - BAND D122

PROJECT/OPPORTUNITY NUMBER:
20451484

SCALE: DO NOT SCALE DRAWING

DATE	DRN BY	CHK BY	APVD BY
08/12/26	TC	EK	TC

DRAWING NUMBER: 26P14961
REV: 2

SHEET 2 OF 2

FOR QUESTIONS, CALL THE
Detroit Mechanical
REGION 123
PHONE: (248) 658 - 0509
EMAIL: reg123@captiveaire.com

HOOD INFORMATION – JOB#8615075

HOOD NO	TAG	MODEL	MANUFACTURER	LENGTH	MAX COOKING TEMP	TYPE	APPLIANCE DUTY	DESIGN CFM/FT	TOTAL EXH CFM	EXHAUST PLENUM RISER(S) WIDTH	LENG	HEIGHT	DIA	CFM	VEL	SP	HOOD CONSTRUCTION	HOOD CONFIG END TO END	ROW
1	Island Single	5424 ND-2WI	CAPTIVEAIRE	4' 6"	450 DEG	I	MEDIUM	289	1300			4"	12"	1300	1655	-0.840"	430 SS WHERE EXPOSED	ALONE	ALONE
2	Island DBL 1	5424 ND-2WI	CAPTIVEAIRE	7' 0"	450 DEG	I	MEDIUM	286	2000			4"	14"	2000	1871	-0.956"	430 SS WHERE EXPOSED	ALONE	ALONE
3	Island DBL 2	5424 ND-2WI	CAPTIVEAIRE	7' 0"	450 DEG	I	MEDIUM	286	2000			4"	14"	2000	1871	-0.956"	430 SS WHERE EXPOSED	ALONE	ALONE
4	Wall Double	3650 BD-2	CAPTIVEAIRE	6' 0"	450 DEG	I	MEDIUM	150	900			4"	10"	900	1650	-0.638"	430 SS WHERE EXPOSED	ALONE	ALONE

HOOD INFORMATION

HOOD NO	TAG	FILTER(S) TYPE	QTY	HEIGHT	LENGTH	EFFICIENCY @ 7 MICRONS	LIGHT(S) QTY	TYPE	WIRE GUARD	UTILITY CABINET(S) LOCATION	SIZE	FIRE SYSTEM TYPE	SIZE	ELECTRICAL MODEL #	SWITCHES QUANTITY	FIRE SYSTEM PIPING	HOOD HANGING WEIGHT
1	Island Single	CAPTRATE SOLO FILTER	3	20"	16"	85% SEE FILTER SPEC	2	RECESSED ROUND	NO							YES	285 LBS
2	Island DBL 1	CAPTRATE SOLO FILTER	5	20"	16"	85% SEE FILTER SPEC	2	RECESSED ROUND	NO	LEFT	12"x54"x24"	TANK FS	4.0/4.0	SC-341110MA	1 LIGHT 1 FAN	YES	704 LBS
3	Island DBL 2	CAPTRATE SOLO FILTER	5	20"	16"	85% SEE FILTER SPEC	2	RECESSED ROUND	NO	LEFT	12"x54"x24"	TANK FS	4.0/4.0			YES	662 LBS
4	Wall Double	CAPTRATE SOLO FILTER	4	16"	16"	85% SEE FILTER SPEC	2	RECESSED ROUND	NO							YES	289 LBS

HOOD OPTIONS

HOOD NO	TAG	OPTION
1	Island Single	FIELD WRAPPER 18.00" HIGH FRONT, LEFT, RIGHT, BACK.
		FINISHED BACK- ISL/REV INSTALL 54.00" LONG, (FILTERS TO THE BACK).
		RISER SENSOR INSTALL 6IN PLEN.
2	Island DBL 1	FIELD WRAPPER 18.00" HIGH FRONT, LEFT, RIGHT, BACK.
		FINISHED BACK- ISL/REV INSTALL 84.00" LONG, (FILTERS TO THE BACK).
3	Island DBL 2	FIELD WRAPPER 18.00" HIGH FRONT, LEFT, RIGHT, BACK.
		FINISHED BACK- ISL/REV INSTALL 84.00" LONG, (FILTERS TO THE BACK).
4	Wall Double	FIELD WRAPPER 37.00" HIGH FRONT, LEFT, RIGHT.
		BACKSPLASH 61.00" HIGH X 72.00" LONG 430 SS VERTICAL.
		RIGHT QUARTER END PANEL 26" TOP WIDTH, 0" BOTTOM WIDTH, 26" HIGH 430 SS.
		LEFT QUARTER END PANEL 26" TOP WIDTH, 0" BOTTOM WIDTH, 26" HIGH 430 SS.
		RISER SENSOR INSTALL 6IN PLEN.

GREASE DUCT & CHIMNEY SPECIFICATIONS:
PROVIDE GREASE DUCT EQUAL TO CAPTIVEAIRE SYSTEMS MODEL "DW" ROUND 20 GAUGE 430 STAINLESS STEEL DUCTWORK. MODEL "DW" IS LISTED TO UL-1978 AND IS INSTALLED USING "V" CLAMP LOCKING CONNECTIONS SEALED WITH 3M FIRE BARRIER 2000 PLUS. MODEL "DW" DOES NOT REQUIRE WELDING PROVIDING IT HAS BEEN INSTALLED PER THE MANUFACTURES INSTALLATION GUIDE.
PROVIDE RATED ACCESS DOORS AT EVERY CHANGE IN DIRECTION AND EVERY 12' ON CENTER. PER MANUFACTURES LISTING MODEL "DW" HORIZONTAL RUNS LESS THAN 75 FT. CAN BE SLOPED 1/16" PER 12", HORIZONTAL RUNS MORE THAN 75 FT. CAN BE SLOPED 3/16" PER 12". DUCT SHOULD BE SLOPED AS MUCH AS POSSIBLE TO REDUCE THE CHANCE OF GREASE ACCUMULATION IN HORIZONTAL RUNS.

IF THE DUCT OR CHIMNEY IS WITHIN 18 INCHES OF COMBUSTIBLE MATERIAL, PROVIDE UL-2221 OR UL-103 HT LISTED DOUBLE WALL GREASE DUCT OR DOUBLE WALL CHIMNEY EQUAL TO CAPTIVEAIRE SYSTEMS MODEL "DW- 2R, 2R TYPE HT, 3R, OR 3Z" ROUND 20 GAUGE 430 STAINLESS INNER DUCT INSULATED WITH A 24 GAUGE 430 STAINLESS OUTER SHELL.

CAPTIVEAIRE SYSTEMS RECOMMENDS THE USE OF LISTED, PRE-FABRICATED ROUND GREASE EXHAUST DUCT TO REDUCE STATIC PRESSURE IN THE SYSTEM, MINIMIZE INSTALLATION AND INSPECTION TIMES, AND ENSURE DUCT IS LIQUID TIGHT

HVAC DISTRIBUTION NOTE

HIGH VELOCITY DIFFUSERS OR HVAC RETURNS SHOULD NOT BE PLACED WITHIN TEN (10) FEET OF THE EXHAUST HOOD. PERFORATED DIFFUSERS ARE RECOMMENDED.

VERIFY CEILING HEIGHT

___' - ___"

HEIGHT REQUIRED TO VERIFY THAT HOOD FITS SPACE AND TO SIZE THE ENCLOSURE PANELS

CUSTOMER APPROVAL TO MANUFACTURE:

APPROVED AS NOTED ☐
APPROVED WITH NO EXCEPTION TAKEN ☐
REVISE AND RESUBMIT ☐
SIGNATURE _____
YOUR TITLE _____ DATE _____

SPECIFICATION: CAPTRATE• GREASE-STOP• SOLO FILTER

THE CAPTRATE GREASE-STOP SOLO FILTER IS A SINGLE-STAGE FILTER FEATURING A UNIQUE S-BAFFLE DESIGN IN CONJUNCTION WITH A SLOTTED REAR BAFFLE DESIGN, TO DELIVER EXCEPTIONAL FILTRATION EFFICIENCY.

FILTER IS STAINLESS STEEL CONSTRUCTION, AND SIZED TO FIT INTO STANDARD 2-INCH DEEP HOOD CHANNEL(S).

UNITS SHALL INCLUDE STAINLESS STEEL HANDLES AND A FASTENING DEVICE TO SECURE THE TWO COMPONENTS WHEN ASSEMBLED.

GREASE EXTRACTION EFFICIENCY PERFORMANCE SHALL REMOVE AT LEAST 75% OF GREASE PARTICLES FIVE MICRONS IN SIZE, AND 85% GREASE PARTICLES SEVEN MICRONS IN SIZE AND LARGER, WITH A CORRESPONDING PRESSURE DROP NOT TO EXCEED 1.0 INCHES OF WATER GAUGE.

THE CAPTRATE GREASE-STOP SOLO WAS TESTED TO ASTM STANDARD ASTM F2519-05. MANUFACTURER APPROVED FOR USE IN SOLID FUEL APPLICATIONS AS A SPARK ARRESTER.

EFFICIENCY VS. PARTICLE DIAMETER

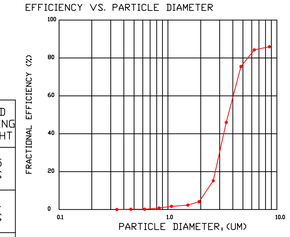

PRESSURE DROP VS. FLOW RATE

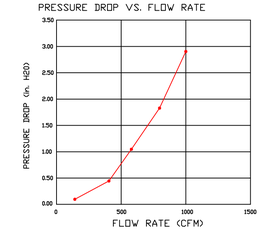

CAPTRATE FILTERS ARE BUILT IN COMPLIANCE WITH:
NFPA #96.
NSF STANDARD #2.
UL STANDARD #1046.
INT. MECH. CODE (IMC).
ULC-S649.

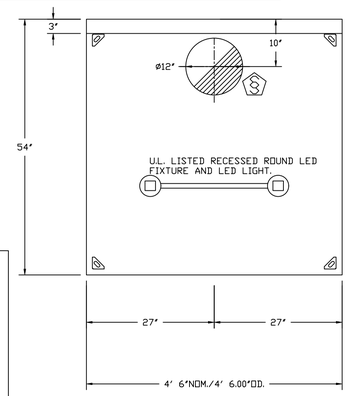

PLAN VIEW – HOOD #1 (Island Single)
4' 6.00" LONG 5424ND-2WI

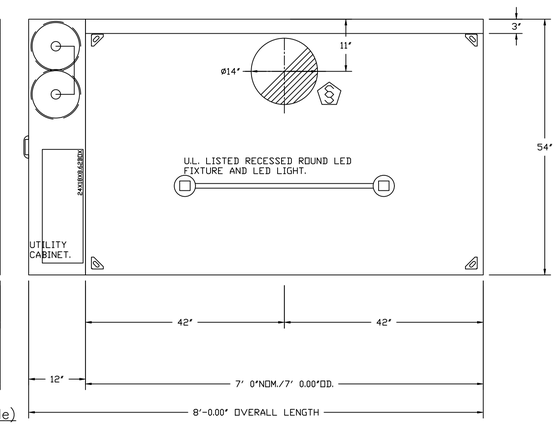

PLAN VIEW – HOOD #2 (Island DBL 1)
7' 0.00" LONG 5424ND-2WI

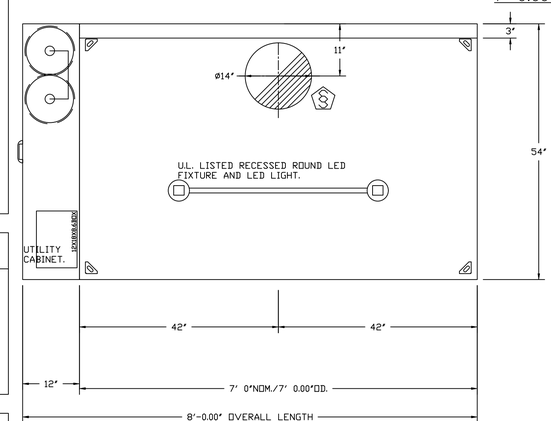

PLAN VIEW – HOOD #3 (Island DBL 2)
7' 0.00" LONG 5424ND-2WI

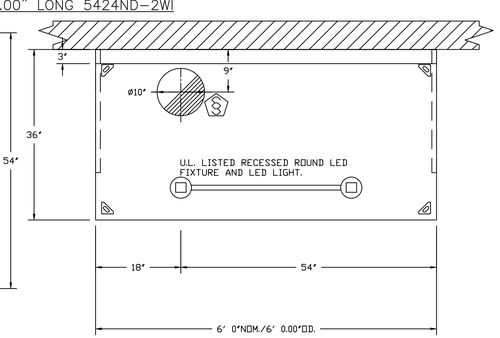

PLAN VIEW – HOOD #4 (Wall Double)
6' 0.00" LONG 3650BD-2

REVISIONS

DESCRIPTION	DATE:

CAPTIVEAIRE
www.captiveaire.com

Detroit Mechanical
38255 West Ten Mile Road, Farmington Hills, MI, 48335 PHONE: (248) 658 - 0509 FAX: 9195168735 EMAIL: reg123@captiveaire.com

Harbor Beach Home Ec R2
402 South 5th Street,
Harbor Beach, MI, 48441

DATE: 8/3/2026
DWG.#: 8615075
DRAWN BY: alex.donner
SCALE: 3/4" = 1'-0"
MASTER DRAWING
SHEET NO. 1

HOOD CORNER
HANGING ANGLE
(HARDWARE BY INSTALLER)

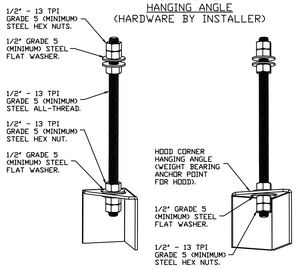

ASSEMBLY INSTRUCTIONS

HANGING ANGLE MUST BE SUPPORTED WITH 1/2" - 13 TPI GRADE 5 (MINIMUM) ALL-THREAD. SANDWICH HANGING ANGLES AND CEILING ANCHOR POINTS WITH 1/2" GRADE 5 (MINIMUM) STEEL FLAT WASHERS AND 1/2" - 13 TPI GRADE 5 (MINIMUM) HEX NUTS AS SHOWN. MUST USE DOUBLED HEX NUT CONFIGURATION BENEATH HOOD HANGING ANGLES AND ABOVE CEILING ANCHORS. MAINTAIN 1/4" OF EXPOSED THREADS BENEATH BOTTOM HEX NUT. TORQUE ALL HEX NUTS TO 57 FT-LBS.

FULL LENGTH
HANGING ANGLE
(HARDWARE BY INSTALLER)

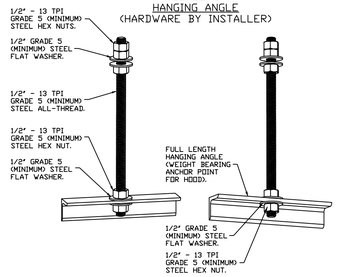

ASSEMBLY INSTRUCTIONS

HANGING ANGLE MUST BE SUPPORTED WITH 1/2" - 13 TPI GRADE 5 (MINIMUM) ALL-THREAD. SANDWICH HANGING ANGLES AND CEILING ANCHOR POINTS WITH 1/2" GRADE 5 (MINIMUM) STEEL FLAT WASHERS AND 1/2" - 13 TPI GRADE 5 (MINIMUM) HEX NUTS AS SHOWN. MUST USE DOUBLED HEX NUT CONFIGURATION ABOVE CEILING ANCHORS. SINGLE HEX NUT BENEATH HANGING ANGLE IS ACCEPTABLE FOR FULL LENGTH HANGING ANGLES. MAINTAIN 1/4" OF EXPOSED THREADS BENEATH BOTTOM HEX NUT. TORQUE ALL HEX NUTS TO 57 FT-LBS.

CLEARANCE TO COMBUSTIBLES

HOODS #	SURFACE	*CLEARANCE
1	TOP	18"
	FRONT	0"
	BACK	0"
	LEFT	18"
	RIGHT	18"
2,3	TOP	18"
	FRONT	0"
	BACK	0"
	LEFT	0"
	RIGHT	18"
4	TOP	18"
	FRONT	0"
	BACK	18"
	LEFT	18"
	RIGHT	18"

- *0" CLEARANCE TO COMBUSTIBLES CONFORMS TO UL710 STANDARD.
- HOOD MOUNTED UTILITY CABINETS REQUIRE 36" SERVICE CLEARANCE.

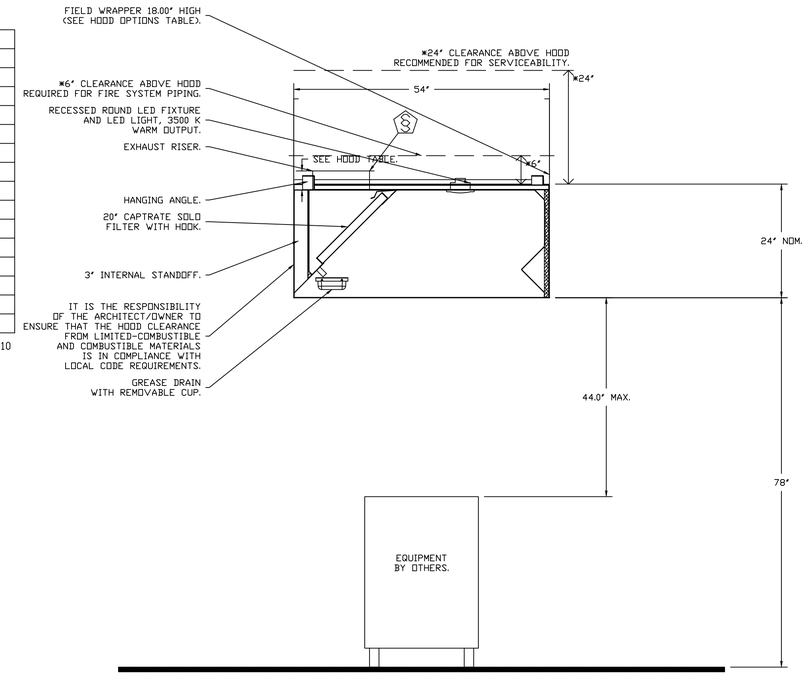

SECTION VIEW - MODEL 5424ND-2WI
HOOD - #1 (Island Single)

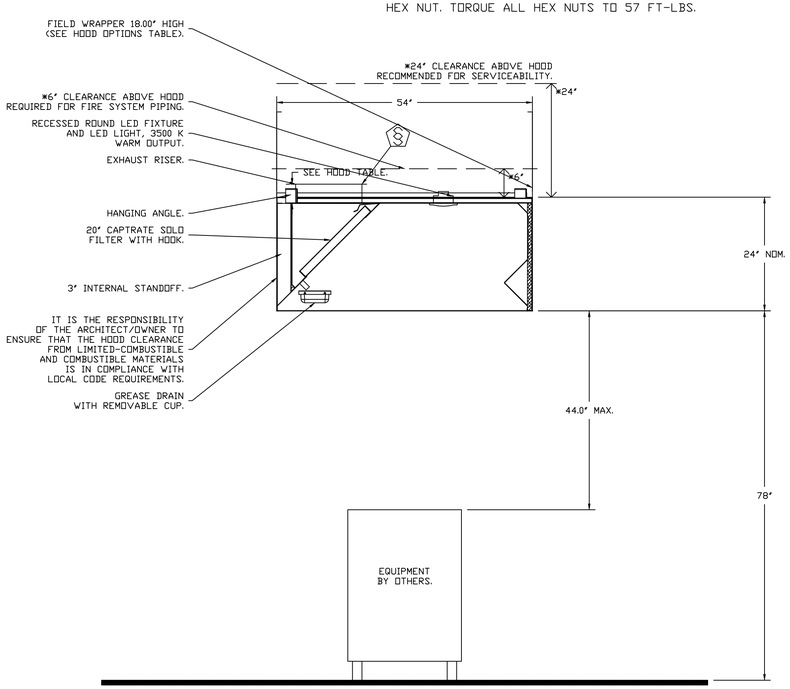

SECTION VIEW - MODEL 5424ND-2WI
HOOD - #2 (Island DBL 1)

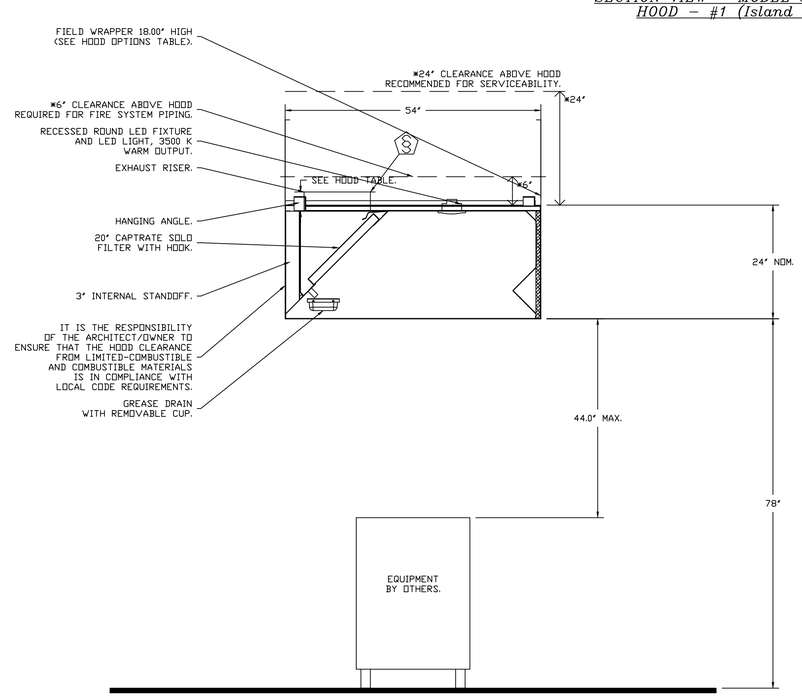

SECTION VIEW - MODEL 5424ND-2WI
HOOD - #3 (Island DBL 2)

REVISIONS

DESCRIPTION	DATE:

CAPTIVEAIRE
www.captiveaire.com
Detroit Mechanical
38255 West Ten Mile Road, Farmington Hills, MI, 48335 PHONE: (248) 658 - 0509 FAX: 9195168735 EMAIL: reg123@captiveaire.com

Harbor Beach Home Ec R2
402 South 5th Street,
Harbor Beach, MI, 48441

DATE: 8/3/2026

DWG.#: 8615075

DRAWN BY: alex.donner

SCALE: 3/4" = 1'-0"

MASTER DRAWING

SHEET NO.
2

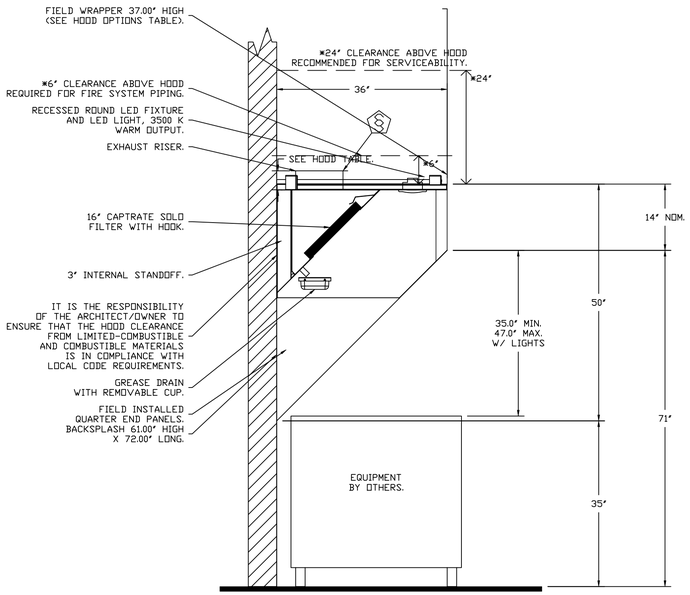

SECTION VIEW – MODEL 3650BD-2
HOOD – #4 (Wall Double)

BACKSPLASH

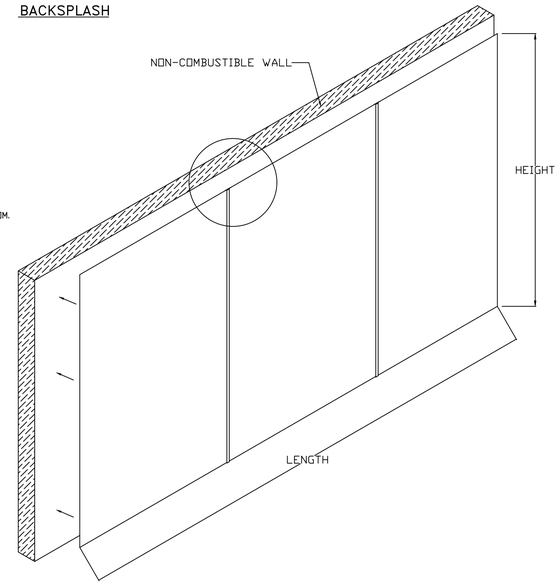

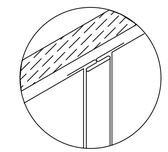

BACKSPLASH PANELS SLIDE INTO DIVIDER BAR

- BACKSPLASH IS NOT INSULATED AND IS UNSUITABLE FOR INSTALL AGAINST COMBUSTIBLE WALLS

REVISIONS

DESCRIPTION	DATE:

CAPTIVEAIRE
www.captiveaire.com

Detroit Mechanical

38255 West Ten Mile Road, Farmington Hills, MI, 48335 PHONE: (248) 658 - 0509 FAX: 9195168735 EMAIL: reg123@captiveaire.com

Harbor Beach Home Ec R2
402 South 5th Street,
Harbor Beach, MI, 48441

DATE: 8/3/2026

DWG.#: 8615075

DRAWN BY: alex.donner

SCALE: 3/4" = 1'-0"

MASTER DRAWING

SHEET NO. 3

FIRE SYSTEM INFORMATION – JOB#8615075

FIRE SYSTEM NO	TAG	TYPE	SIZE	MAX FP	DESIGN FP	INSTALLATION	
						SYSTEM	LOCATION ON HOOD
1		TANK FS	4.0/4.0	40	32	FIRE CABINET LEFT	LEFT, HOOD 2
2		TANK FS	4.0/4.0	40	39	FIRE CABINET LEFT	LEFT, HOOD 3

REVISIONS

DESCRIPTION	DATE:

CAPTIVEAIRE

www.captiveaire.com

Detroit Mechanical

38255 West Ten Mile Road, Farmington Hills, MI, 48335 PHONE: (248) 658 - 0509 FAX: 9195168735 EMAIL: reg123@captiveaire.com

Harbor Beach Home Ec R2
402 South 5th Street,
Harbor Beach, MI, 48441

DATE: 8/3/2026

DWG.#: 8615075

DRAWN BY: alex.donner

SCALE: 3/4" = 1'-0"

MASTER DRAWING

SHEET NO.
4

FIRE SYSTEM PARTS LIST KEY

FIRE SYSTEM NO	TAG	KEY NUMBER - PART DESCRIPTION	QTY BY FACTORY	QTY BY DIST
1		0 - 0 - 32-00002 - QUIK SEAL - 1/2" (UL).	2	0
		26 - 26 - QSA-3/8 - QUIK SEAL - 3/8" (UL).	8	0
		16 - 16 - DL-F - NOZZLE - TANK PROTECTION APPLIANCE COVERAGE NOZZLE (INCLUDES METAL BLOW OFF CAP, LANYARD, USED WITH CHROME-PLATED PIPE).	8	0
		0 - 0 - 9097200PC - PRO PRESS PC611 1/2 PRESS TEE LD.	8	0
		0 - 0 - 9055455PC - PRO PRESS 1/2 PRESS X PRESS 90 ELBOW LD.	7	0
		0 - 0 - 361091 - 3/8" BRASS PLUG.	3	0
		0 - 0 - 79425 - 3/8" NPT FEMALE TO 1/2" MALE PROPRESS ADAPTER.	3	0
		16 - 16 - 79210 - 1/2" X 3/8" NPT MALE ADAPTER, VIEGA.	8	0
		0 - 0 - BI145 - 3/8" BLACK IRON 90 ELL.	4	0
		0 - 0 - TANK STRAP - TANK STRAP - USED FOR TANK FIRE SUPPRESSION.	6	0
		0 - 0 - TFS-UCTANKBRACKET - TANK BRACKET FOR FIRE SYSTEM TANK INSTALLATION IN UTILITY CABINETS, TANK FIRE SUPPRESSION.	2	0
		0 - 0 - 87-120045-001 - HOSE, SECONDARY ACTUATOR HOSE, 7.5" BRAIDED STAINLESS STEEL, TANK FIRE SUPPRESSION.	1	0
		0 - 0 - WK-283952-000 - DISCHARGE ADAPTER, TANK FIRE SUPPRESSION.	2	0
		0 - 0 - 87-300152-001 - HARDWARE, SVA BOLTS, TANK FIRE SUPPRESSION.	8	0
		0 - 0 - A0034332 - JUNCTION BOX FOR MANUAL PULL STATION. 1.5" DEEP BACK BOX, RED COLOR.	1	0
		0 - 0 - 79525 - 1/2" 90 PRO-PRESS ELBOW WITH 1/2" NPT FEMALE CONNECTION, VIEGA.	1	0
		0 - 0 - 79580 - 1/2" X 1/2" PRO-PRESS TEE X 1/2" NPT FEMALE CONNECTION, VIEGA.	2	0
		0 - 0 - 4429K153 - 1/2" MALE NPT TO 1/2" FEMALE NPT ELBOW, BRASS.	2	0
		0 - 0 - 4429K422 - 1/2" X 1/4" BRASS REDUCING BUSHING.	1	0
		0 - 0 - A31484 - 1/4" NPT SCHRADER VALVE AND CAP, JB INDUSTRIES. 1/4" FLARE X 1/4" MPT HALF UNION. USED ON TANK SERVICE PORT.	1	0
		34 - 34 - A0034331 - RED COLOR - 24VDC SINGLE ACTION MANUAL ACTUATION DEVICE (PUSH/PULL STATION) WITH PROTECTIVE COVER, ONE (1) NORMALLY OPEN CONTACT.	1	0
		0 - 0 - DATANKLOCK - DISCHARGE ADAPTER TANK LOCKING PLATE FOR FIRE SYSTEM TANK INSTALLATION IN UTILITY CABINETS, TANK FIRE SUPPRESSION.	2	0
		0 - 0 - 98694A115 - HARDWARE, DATANKLOCK LOCKING BRACKET SQUARE NUTS 5/16" ZINC, TANK FIRE SUPPRESSION.	4	0
		0 - 0 - - TANK FIRE SUPPRESSION POST-DISCHARGE PROCEDURE UTILITY CABINET LABEL SHEET.	1	0
		0 - 0 - - TANK FIRE SUPPRESSION MAINTENANCE GUIDE UTILITY CABINET LABEL SHEET.	1	0
		0 - 0 - 87-300030-001 - PRIMARY ACTUATOR KIT (PAK) - ACTUATOR AND RELEASE SOLENOID ASSEMBLY, ONE NEEDED PER FIRE SYSTEM, SUPERVISED, TANK FIRE SUPPRESSION.	1	0
		0 - 0 - 87-120042-001 - SECONDARY ACTUATOR VALVE (SVA) - SINGLE ACTUATOR, REQUIRES PRIMARY RELEASE ACTUATOR, TANK FIRE SUPPRESSION.	1	0
		0 - 0 - 87-300033-001 - DIN CONNECTOR, CANFIELD PART #5J560-201-EU0A, TANK FIRE SUPPRESSION, SUBMINATURE SOLENOID CONNECTION (CED VENDOR 30377).	1	0
		0 - 0 - 87-300001-001 - TANK - PRESSURIZED TANK USED FOR TANK FIRE SUPPRESSION.	2	0
		0 - 0 - 12-F28021-32144-DT-360 - DUCT FIRE THERMOSTAT WITH 12 FOOT WIRE LEADS. NO, CLOSE ON TEMP RISE AT 360°F. (A0034310).	2	0
		0 - 0 - SLPCON-03FT - SUPERVISED LOOP CONNECTION KIT. CONTAINS THE PARTS NEEDED TO CONNECT THE SUPERVISED LOOP BETWEEN END TO END HOODS WITH LESS THAN A 2' GAP. KIT CONTAINS 5 FEET OF BLACK MG WIRE, 5 FEET OF TAN MG WIRE, 3 FEET OF FLEXIBLE CONDUIT, AND TWO 7/8" CONNECTORS.	1	0
		0 - 0 - SLPCON-20FT - SUPERVISED LOOP CONNECTION KIT. CONTAINS THE PARTS NEEDED TO CONNECT THE SUPERVISED LOOP BETWEEN HOODS WITH UPTO 19' GAP. KIT CONTAINS 22 FEET OF BLACK MG WIRE, 22 FEET OF TAN MG WIRE, 20 FEET OF FLEXIBLE CONDUIT, AND TWO 7/8" CONNECTORS.	2	0
2		0 - 0 - 32-00002 - QUIK SEAL - 1/2" (UL).	2	0
		26 - 26 - QSA-3/8 - QUIK SEAL - 3/8" (UL).	9	0
		16 - 16 - DL-F - NOZZLE - TANK PROTECTION APPLIANCE COVERAGE NOZZLE (INCLUDES METAL BLOW OFF CAP, LANYARD, USED WITH CHROME-PLATED PIPE).	9	0
		0 - 0 - 9097200PC - PRO PRESS PC611 1/2 PRESS TEE LD.	9	0
		0 - 0 - 9055455PC - PRO PRESS 1/2 PRESS X PRESS 90 ELBOW LD.	7	0
		0 - 0 - 361091 - 3/8" BRASS PLUG.	3	0
		0 - 0 - 79425 - 3/8" NPT FEMALE TO 1/2" MALE PROPRESS ADAPTER.	3	0
		16 - 16 - 79210 - 1/2" X 3/8" NPT MALE ADAPTER, VIEGA.	9	0
		0 - 0 - BI145 - 3/8" BLACK IRON 90 ELL.	4	0
		0 - 0 - TANK STRAP - TANK STRAP - USED FOR TANK FIRE SUPPRESSION.	6	0
		0 - 0 - TFS-UCTANKBRACKET - TANK BRACKET FOR FIRE SYSTEM TANK INSTALLATION IN UTILITY CABINETS, TANK FIRE SUPPRESSION.	2	0
		0 - 0 - 87-120045-001 - HOSE, SECONDARY ACTUATOR HOSE, 7.5" BRAIDED STAINLESS STEEL, TANK FIRE SUPPRESSION.	1	0
		0 - 0 - WK-283952-000 - DISCHARGE ADAPTER, TANK FIRE SUPPRESSION.	2	0
		0 - 0 - 87-300152-001 - HARDWARE, SVA BOLTS, TANK FIRE SUPPRESSION.	8	0
		0 - 0 - A0034332 - JUNCTION BOX FOR MANUAL PULL STATION. 1.5" DEEP BACK BOX, RED COLOR.	1	0
		0 - 0 - 79525 - 1/2" 90 PRO-PRESS ELBOW WITH 1/2" NPT FEMALE CONNECTION, VIEGA.	1	0
		0 - 0 - 79580 - 1/2" X 1/2" PRO-PRESS TEE X 1/2" NPT FEMALE CONNECTION, VIEGA.	2	0
		0 - 0 - 4429K153 - 1/2" MALE NPT TO 1/2" FEMALE NPT ELBOW, BRASS.	2	0
		0 - 0 - 4429K422 - 1/2" X 1/4" BRASS REDUCING BUSHING.	1	0
		0 - 0 - A31484 - 1/4" NPT SCHRADER VALVE AND CAP, JB INDUSTRIES. 1/4" FLARE X 1/4" MPT HALF UNION. USED ON TANK SERVICE PORT.	1	0
		0 - 0 - 87-300033-001 - DIN CONNECTOR, CANFIELD PART #5J560-201-EU0A, TANK FIRE SUPPRESSION, SUBMINATURE SOLENOID CONNECTION (CED VENDOR 30377).	1	0
		0 - 0 - SLPCON-03FT - SUPERVISED LOOP CONNECTION KIT. CONTAINS THE PARTS NEEDED TO CONNECT THE SUPERVISED LOOP BETWEEN END TO END HOODS WITH LESS THAN A 2' GAP. KIT CONTAINS 5 FEET OF BLACK MG WIRE, 5 FEET OF TAN MG WIRE, 3 FEET OF FLEXIBLE CONDUIT, AND TWO 7/8" CONNECTORS.	1	0
		0 - 0 - SLPCON-20FT - SUPERVISED LOOP CONNECTION KIT. CONTAINS THE PARTS NEEDED TO CONNECT THE SUPERVISED LOOP BETWEEN HOODS WITH UPTO 19' GAP. KIT CONTAINS 22 FEET OF BLACK MG WIRE, 22 FEET OF TAN MG WIRE, 20 FEET OF FLEXIBLE CONDUIT, AND TWO 7/8" CONNECTORS.	2	0
		0 - 0 - 12-F28021-32144-DT-360 - DUCT FIRE THERMOSTAT WITH 12 FOOT WIRE LEADS. NO, CLOSE ON TEMP RISE AT 360°F. (A0034310).	2	0
		34 - 34 - A0034331 - RED COLOR - 24VDC SINGLE ACTION MANUAL ACTUATION DEVICE (PUSH/PULL STATION) WITH PROTECTIVE COVER, ONE (1) NORMALLY OPEN CONTACT.	1	0
		0 - 0 - DATANKLOCK - DISCHARGE ADAPTER TANK LOCKING PLATE FOR FIRE SYSTEM TANK INSTALLATION IN UTILITY CABINETS, TANK FIRE SUPPRESSION.	2	0
		0 - 0 - 98694A115 - HARDWARE, DATANKLOCK LOCKING BRACKET SQUARE NUTS 5/16" ZINC, TANK FIRE SUPPRESSION.	4	0
		0 - 0 - - TANK FIRE SUPPRESSION POST-DISCHARGE PROCEDURE UTILITY CABINET LABEL SHEET.	1	0
		0 - 0 - - TANK FIRE SUPPRESSION MAINTENANCE GUIDE UTILITY CABINET LABEL SHEET.	1	0
		0 - 0 - 87-300030-001 - PRIMARY ACTUATOR KIT (PAK) - ACTUATOR AND RELEASE SOLENOID ASSEMBLY, ONE NEEDED PER FIRE SYSTEM, SUPERVISED, TANK FIRE SUPPRESSION.	1	0
		0 - 0 - 87-300001-001 - TANK - PRESSURIZED TANK USED FOR TANK FIRE SUPPRESSION.	2	0
		0 - 0 - 87-120042-001 - SECONDARY ACTUATOR VALVE (SVA) - SINGLE ACTUATOR, REQUIRES PRIMARY RELEASE ACTUATOR, TANK FIRE SUPPRESSION.	1	0

REVISIONS

	DESCRIPTION	DATE:
△		
△		
△		
△		

CAPTIVEAIRE
www.captiveaire.com
Detroit Mechanical
38255 West Ten Mile Road, Farmington Hills, MI, 48335 PHONE: (248) 658 - 0509 FAX: 9195168735 EMAIL: reg123@captiveaire.com

Harbor Beach Home Ec R2
402 South 5th Street,
Harbor Beach, MI, 48441

DATE: 8/3/2026

DWG.#: 8615075

DRAWN BY: alex.donner

SCALE: 3/4" = 1'-0"

MASTER DRAWING

SHEET NO. 5

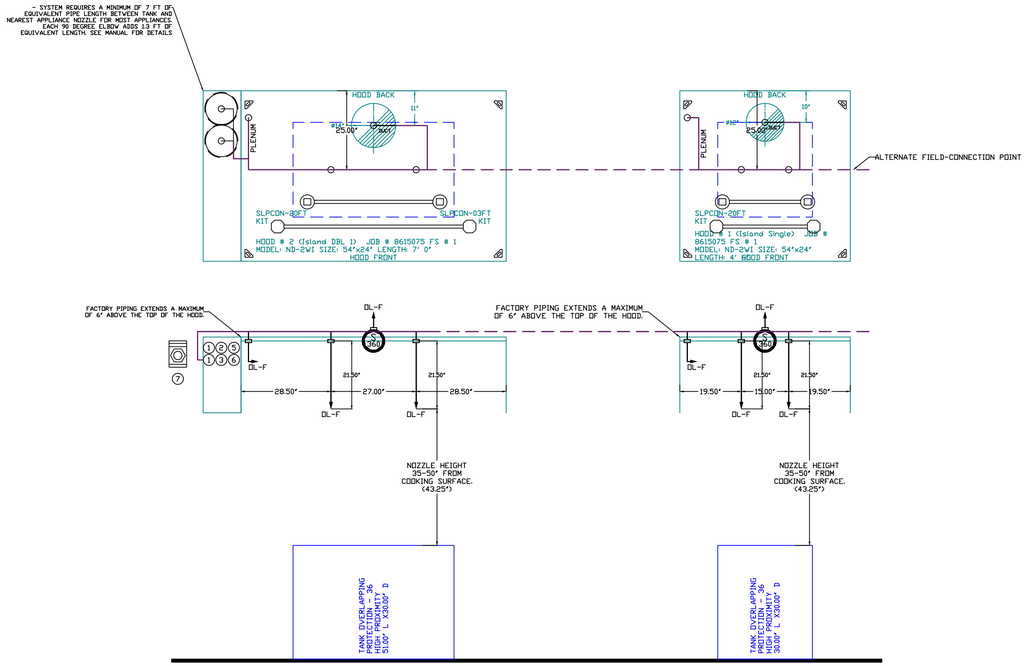

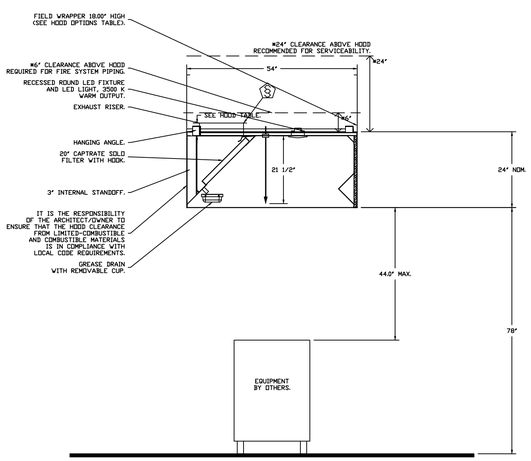

SECTION VIEW - MODEL 5424ND-2WI
HOOD - #2

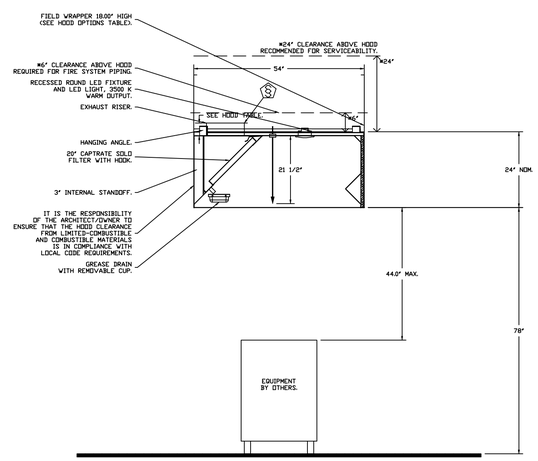

SECTION VIEW - MODEL 5424ND-2WI
HOOD - #1

NOTES
- FIELD PIPE DROPS AS SHOWN
  PIPING, ELBOWS, TEES, AND NOZZLES SUPPLIED BY CAS.
- FIELD INSTALLED DROP: FACTORY WILL PROVIDE QTY 2 60IN LONG PIECES OF CHROME PLATED PIPING SHIPPED LOOSE TO BE FIELD-INSTALLED.
- SHIP LOOSE DROP: FACTORY WILL PROVIDE THE EXACT CHROME PIPE LENGTH NEEDED SHIPPED LOOSE TO BE FIELD-INSTALLED.
- RELOCATE NOZZLES IF FLOW PATTERN IS BLOCKED BY SHELVING, SALAMANDERS, ETC.
- OVERLAPPING COVERAGE SHALL NOT BE USED ON ANY APPLIANCE WITH AN OBSTRUCTION.
- IF APPLICABLE, EXTENDED PRE-PIPED DROPS ARE SHIPPED LOOSE.
- FACTORY PIPING EXTENDS A MAXIMUM OF 6" ABOVE THE TOP OF THE HOOD.

- APPLIANCE DIMENSIONS LISTED REPRESENT THE COOKING SURFACE SIZE, NOT THE OVERALL APPLIANCE SIZE.

- THIS PRE-ENGINEERED FIRE SYSTEM COMPLIES WITH U.L. 300 REQUIREMENTS.

- DL-F NOZZLE PART NUMBER REPLACES 3070-3/8H-10-SS

JOB #: 8615075.
JOB NAME: HARBOR BEACH HOME EC R2.

SYSTEM SIZE: TANK-SP-2 DESIGN FP: 32. MAXIMUM FP: 40.
HOOD # 1 4' 6.00" LONG x 54" WIDE x 24" HIGH.
RISER # 1 SIZE: 12" DIA.
HOOD # 1 METAL BLOW-OFF CAPS INCLUDED.
HOOD # 2 7' 0.00" LONG x 54" WIDE x 24" HIGH.
RISER # 1 SIZE: 14" DIA.
HOOD # 2 METAL BLOW-OFF CAPS INCLUDED.

- HEAVY-DUTY APPLIANCES (RATED 600°F) WILL REQUIRE AN ADDITIONAL DOWNSTREAM FIRESTAT IN THE EVENT THAT THE DUCTWORK CONTAINS ANY HORIZONTAL RUNS OVER 25 FT IN LENGTH.
- MEDIUM TO LIGHT-DUTY APPLIANCES (RATED 450°F) WILL NOT REQUIRE ANY ADDITIONAL DOWNSTREAM DETECTION.

AGENT DISTRIBUTION PIPING LIMITATIONS	
PIPE SECTION	MAX PIPE LENGTH (FT)
MAX SUPPLY LINE TO FIRST OVERLAPPING NOZZLE	42
OVERLAPPING NOZZLE APPLIANCE BRANCH	10
DEDICATED NOZZLE APPLIANCE BRANCH	10

LEGEND - FIRE CABINET TANK SYSTEM

1 4 GALLON TANK.
2 PRIMARY ACTUATOR RELEASE.
3 SECONDARY ACTUATOR RELEASE.
4 PRESSURE SUPERVISION SWITCH.
5 PRIMARY HOSE ASSEMBLY.
6 SECONDARY HOSE ASSEMBLY.
7 REMOTE MANUAL ACTUATION DEVICE.

REVISIONS

DESCRIPTION	DATE:

CAPTIVEAIRE
www.captiveaire.com
Detroit Mechanical
38255 West Ten Mile Road, Farmington Hills, MI, 48335 PHONE: (248) 658 - 0509 FAX: 9195168735 EMAIL: reg123@captiveaire.com

Harbor Beach Home Ec R2
402 South 5th Street,
Harbor Beach, MI, 48441

DATE: 8/3/2026

DWG.#: 8615075

DRAWN BY: alex.donner

SCALE: 1/2" = 1'-0"

MASTER DRAWING

SHEET NO. 6

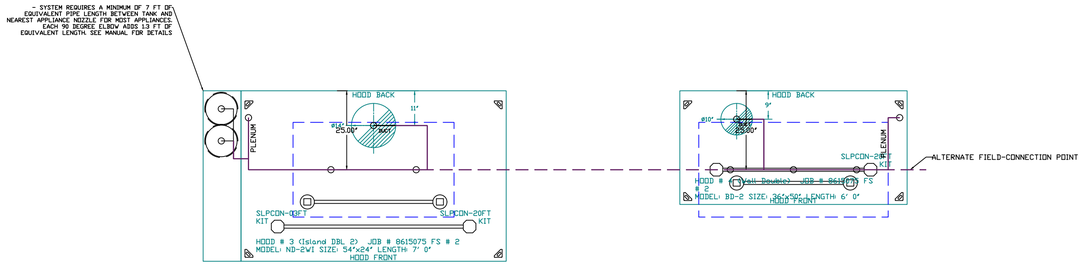

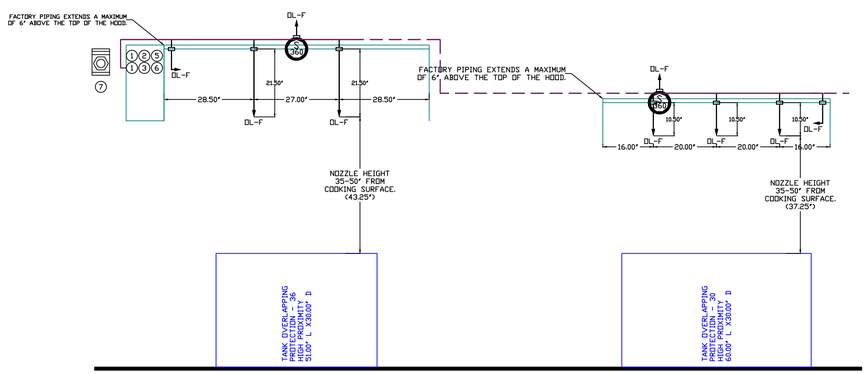

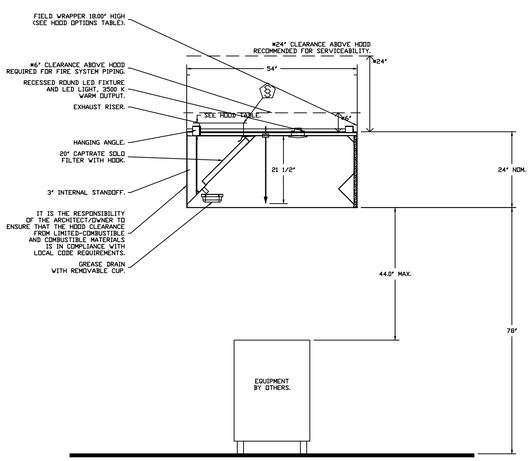

SECTION VIEW - MODEL 5424ND-2WI
HOOD - #3

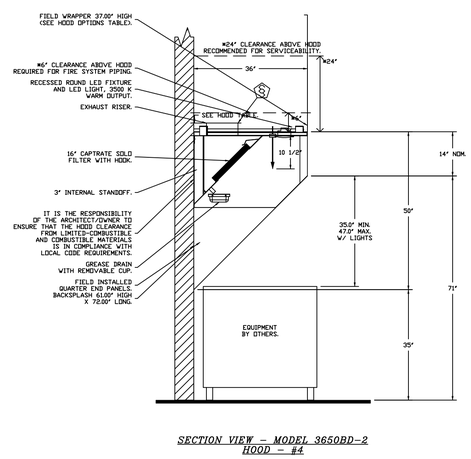

SECTION VIEW - MODEL 3650BD-2
HOOD - #4

INCLUDES: FIELD INSTALLATION AND HOOKUP DURING NORMAL BUSINESS HOURS BY CERTIFIED INSTALLERS ONLY IN THE LOCATION NOTED ABOVE, TWO SITE VISITS ONLY (ONE VISIT TO SET PULL STATION & SYSTEM HOOKUP AND ONE VISIT FOR ONE TEST; ADDITIONAL VISITS WILL RESULT IN ADDITIONAL CHARGES), ONE MECHANICAL OR ELECTRICAL GAS VALVE PER SYSTEM AT A MAXIMUM SIZE OF 2", PERMIT, AND SYSTEM TEST.
EXCLUDES: UNION LABOR & PREVAILING WAGE (LABOR & WAGES WILL BE ADDED IF APPLICABLE), GAS VALVE INSTALLATION, ELECTRICAL HOOKUP AND CONNECTIONS, HANGING OF FIRE CABINET, SHUNT TRIP, HANDHELD EXTINGUISHER(S), ON-SITE RE-PIPING DUE TO EQUIPMENT LAYOUT CHANGES.

NOTES
- FIELD PIPE DROPS AS SHOWN
  PIPING, ELBOWS, TEES, AND NOZZLES SUPPLIED BY CAS.
- FIELD INSTALLED DROP: FACTORY WILL PROVIDE QTY 2 60IN LONG PIECES OF CHROME PLATED PIPING SHIPPED LOOSE TO BE FIELD-INSTALLED.
- SHIP LOOSE DROP: FACTORY WILL PROVIDE THE EXACT CHROME PIPE LENGTH NEEDED SHIPPED LOOSE TO BE FIELD-INSTALLED.
- RELOCATE NOZZLES IF FLOW PATTERN IS BLOCKED BY SHELVING, SALAMANDERS, ETC.
- OVERLAPPING COVERAGE SHALL NOT BE USED ON ANY APPLIANCE WITH AN OBSTRUCTION.
- IF APPLICABLE, EXTENDED PRE-PIPED DROPS ARE SHIPPED LOOSE.
- FACTORY PIPING EXTENDS A MAXIMUM OF 6" ABOVE THE TOP OF THE HOOD.

- APPLIANCE DIMENSIONS LISTED REPRESENT THE COOKING SURFACE SIZE, NOT THE OVERALL APPLIANCE SIZE.

- THIS PRE-ENGINEERED FIRE SYSTEM COMPLIES WITH U.L. 300 REQUIREMENTS.

- DL-F NOZZLE PART NUMBER REPLACES 3070-3/8H-10-SS

JOB #: 8615075.
JOB NAME: HARBOR BEACH HOME EC R2.

SYSTEM SIZE: TANK-SP-2 DESIGN FP: 39, MAXIMUM FP: 40.
HOOD # 3 7' 0.00" LONG x 54" WIDE x 24" HIGH.
RISER # 1 SIZE: 14" DIA.
HOOD # 3 METAL BLOW-OFF CAPS INCLUDED.
HOOD # 4 6' 0.00" LONG x 36" WIDE x 50" HIGH.
RISER # 1 SIZE: 10" DIA.
HOOD # 4 METAL BLOW-OFF CAPS INCLUDED.

- HEAVY-DUTY APPLIANCES (RATED 600°F) WILL REQUIRE AN ADDITIONAL DOWNSTREAM FIRESTAT IN THE EVENT THAT THE DUCTWORK CONTAINS ANY HORIZONTAL RUNS OVER 25 FT IN LENGTH.
- MEDIUM TO LIGHT-DUTY APPLIANCES (RATED 450°F) WILL NOT REQUIRE ANY ADDITIONAL DOWNSTREAM DETECTION.

AGENT DISTRIBUTION PIPING LIMITATIONS	
PIPE SECTION	MAX PIPE LENGTH (FT)
MAX SUPPLY LINE TO FIRST OVERLAPPING NOZZLE	42
OVERLAPPING NOZZLE APPLIANCE BRANCH	10
DEDICATED NOZZLE APPLIANCE BRANCH	10

LEGEND - FIRE CABINET TANK SYSTEM

1 4 GALLON TANK.
2 PRIMARY ACTUATOR RELEASE.
3 SECONDARY ACTUATOR RELEASE.
4 PRESSURE SUPERVISION SWITCH.
5 PRIMARY HOSE ASSEMBLY.
6 SECONDARY HOSE ASSEMBLY.
7 REMOTE MANUAL ACTUATION DEVICE.

TANK MANUAL ACTIVATION DEVICE DETAIL

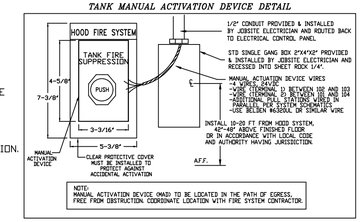

REVISIONS

DESCRIPTION	DATE:

CAPTIVEAIRE
www.captiveaire.com
Detroit Mechanical
38255 West Ten Mile Road, Farmington Hills, MI, 48335 PHONE: (248) 658 - 0509 FAX: 9195168735 EMAIL: reg123@captiveaire.com

Harbor Beach Home Ec R2
402 South 5th Street,
Harbor Beach, MI, 48441

DATE: 8/3/2026

DWG.#: 8615075

DRAWN BY: alex.donner

SCALE: 1/2" = 1'-0"

MASTER DRAWING

SHEET NO. 7

EXHAUST FAN INFORMATION – JOB#8615075

FAN UNIT NO	TAG	QTY	FAN UNIT MODEL #	MANUFACTURER	CFM	ESP	RPM	MOTOR ENCL	HP	BHP	PHASE	VOLT	FLA	DISCHARGE VELOCITY	WEIGHT (LBS)	SONES
1	KEF - 1	1	DU85HFA	CAPTIVEAIRE	1300	1.500	1515	TEAO-ECM	1.000	0.7030	1	115	11.6	411 FPM	94	14.4
2	KEF - 2	1	DU180HFA	CAPTIVEAIRE	2000	1.400	1151	ODP,PREMIUM	1.500	0.9920	3	208	6.6	462 FPM	191	13.7
3	KEF - 3	1	DU180HFA	CAPTIVEAIRE	2000	1.400	1151	ODP,PREMIUM	1.500	0.9920	3	208	6.6	462 FPM	191	13.7
4	KEF - 4	1	DU85HFA	CAPTIVEAIRE	900	1.000	1223	TEAO-ECM	1.000	0.3480	1	115	11.6	285 FPM	94	9.3

REVISIONS

DESCRIPTION	DATE:

CAPTIVEAIRE
www.captiveaire.com
Detroit Mechanical
38255 West Ten Mile Road, Farmington Hills, MI, 48335 PHONE: (248) 658 - 0509 FAX: 9195168735 EMAIL: reg123@captiveaire.com

Harbor Beach Home Ec R2
402 South 5th Street,
Harbor Beach, MI, 48441

DATE: 8/3/2026

DWG.#: 8615075

DRAWN BY: alex.donner

SCALE: 3/4" = 1'-0"

MASTER DRAWING

SHEET NO. 8

DOAS/RTU FAN SCHEDULE - JOB#8615075

FAN INFORMATION										ELECTRICAL INFORMATION					COOLING INFORMATION												REHEAT INFORMATION					GAS HEAT INFORMATION						A2L MINIMUM ROOM VOLUME			NOTES
															OUTSIDE AIR		LEAVING AIR (COIL)			LEAVING AIR (UNIT)		CAPACITY					DISCHARGE		CAPACITY												
FAN UNIT NO	TAG	QTY	DOAS/RTU MODEL #	MANUFACTURER	BLOWER	TOTAL CFM	MAX OUTSIDE AIR CFM	RETURN AIR CFM	WEIGHT (LBS)	ESP	HP	PHASE	VOLT	MCA	MOCP	DB	WB	DB	WB	DP	DB	WB.	TOTAL	SENS.	IEER	ISMRE2	DB	WB	DESIRED	MAX	MOISTURE REMOVAL RATE	GAS TYPE	INPUT BTUs	OUTPUT BTUs	TEMP RISE	REQUIRED INPUT GAS PRESSURE	ROOM AREA (FT2)	AIRFLOW (CFM)	HEIGHT (FT)	
5	MAU - 1	1	CAS-HVAC4-1.700-30-30T-DOAS	CAPTIVEAIRE	30P-4	6200	6200	0	5047	0.700	7.50	3	460	77.9A	80A	79.7°F	73.2°F	55.2°F	55.2°F	55.2°F	56.4°F	55.7°F	371.6 MBH	165.1 MBH	17.8	8.1	70.0°F	60.7°F	100.3 MBH	260 MBH	183.3 LBS/HR	NATURAL	700000	567000	76°F	7 IN. W.C. - 14 IN. W.C.	1013.3	1824	7.2	1,2,3,4,5,6,7,8,9,10,11,12,13,14,15,16,17,18,19,20

NOTES:

1. INVERTER SCROLL COMPRESSOR WITH INTEGRATED OIL SENSOR. DIGITAL OR STAGED SCROLL NOT AN APPROVED EQUAL
2. DIRECT DRIVE PLENUM BLOWER. BELT DRIVEN BLOWERS ARE NOT ACCEPTABLE
3. INTEGRATED MONITORING VIA CELLULAR CONNECTION BY MANUFACTURER
4. REFRIGERATION PRESSURE MONITORING ON HIGH AND LOW PRESSURE SIDE OF SYSTEM INCLUDED THROUGH DIGITAL INTERFACE
5. EC MOTOR CONDENSING FANS
6. ELECTRONIC EXPANSION VALVE. TXV NOT ACCEPTABLE
7. SUCTION LINE ACCUMULATOR
8. FACTORY COMMISSIONING WITH 5 YEAR PARTS WARRANTY, 25 YEAR WARRANTY ON STAINLESS STEEL HEAT EXCHANGER
9. AVERAGING INTAKE, EVAP AND DISCHARGE TEMPERATURE SENSORS (DISCHARGE SENSOR TO BE FACTORY MOUNTED WITHIN UNIT)
10. 2" EXTERIOR DUAL-WALL CONSTRUCTION W/ R-13 INSULATION-MINIMUM 20GA EXTERIOR W/ 14GA BASE
11. 81% EFFICIENT FURNACE, WITH MODULATING INDUCER TO MAINTAIN CONSTANT COMBUSTION EFFICIENCY ACROSS FIRING RANGE. 12:1 TURNDOWN WITH NG AND 10:1 TURNDOWN WITH LP
12. UNIT SHALL INCLUDE A SERVICE SAFE STOP FEATURE - PROTECTS THE COMPRESSOR FROM DAMAGE DURING SHUTDOWN FOR SERVICE
13. SUPPLY CFM MONITORING INTEGRAL TO UNIT WITH CFM MEASUREMENT INCLUDED THROUGH DIGITAL INTERFACE
14. FULLY MODULATING HOT GAS REHEAT
15. LOW AMBIENT COOLING OPERATION DOWN TO 0°F
16. FACTORY INSTALLED COMPRESSOR SOUND BLANKET
17. SIDE DISCHARGE/NO RETURN
18. MINIMUM ROOM AREA ASSUMED 7.2' SUPPLY DIFFUSER HEIGHT AND IS CALCULATED PER UL60335-2-40 4TH ED. VALUES BASED ON FACTORY CHARGE. ACTUAL SITE CHARGE MAY DIFFER.
19. COOLING LEAVING AIRE TEMP (UNIT) ACCOUNTS FOR SUPPLY BLOWER MOTOR HEAT GAINS
20. SCCR RATING OF 65kAMP

FAN ACCESSORIES

FAN UNIT NO	TAG	EXHAUST			SUPPLY			
		GREASE CUP	GRAVITY DAMPER	WALL MOUNT	SIDE DISCHARGE	GRAVITY DAMPER	MOTORIZED DAMPER	WALL MOUNT
1	KEF - 1	YES						
2	KEF - 2	YES						
3	KEF - 3	YES						
4	KEF - 4	YES						

CURB ASSEMBLIES

NO	ON FAN	TAG	WEIGHT	ITEM	SIZE
1	# 1	KEF - 1	36 LBS	CURB	23.000"W X 23.000"L X 20.000"H VENTED HINGED.
2	# 2	KEF - 2	43 LBS	CURB	26.500"W X 26.500"L X 20.000"H VENTED HINGED.
3	# 3	KEF - 3	43 LBS	CURB	26.500"W X 26.500"L X 20.000"H VENTED HINGED.
4	# 4	KEF - 4	36 LBS	CURB	23.000"W X 23.000"L X 20.000"H VENTED HINGED.

REVISIONS

DESCRIPTION	DATE:

CAPTIVEAIRE
www.captiveaire.com
Detroit Mechanical
38255 West Ten Mile Road, Farmington Hills, MI, 48335 PHONE: (248) 658 - 0509 FAX: 9195168735 EMAIL: reg123@captiveaire.com

Harbor Beach Home Ec R2
402 South 5th Street,
Harbor Beach, MI, 48441

DATE: 8/3/2026

DWG.#: 8615075

DRAWN BY: alex.donner

SCALE: 1/2" = 1'-0"

MASTER DRAWING

SHEET NO. 9

FAN OPTIONS

FAN UNIT NO	TAG	QTY	DESCRIPTION
1	KEF - 1	1	GREASE BOX
		1	FAN BASE CERAMIC SEAL - DU/DR85HFA - INSTALLED AT PLANT - FOR GREASE DUCTS
		1	ECM WIRING PACKAGE - PWM SIGNAL FROM ECPM03 PREWIRE (TELCO MOTOR), CCW ROTATION
		1	2 YEAR PARTS WARRANTY
2	KEF - 2	1	GREASE BOX
		1	FAN BASE CERAMIC SEAL - DU/DR180HFA - INSTALLED AT PLANT - FOR GREASE DUCTS
		1	UNIT MOUNTED VFD FOR USE WITH ECPM03
		1	VFD MOUNTING BRACKET FOR DU/DR 180
		1	EXHAUST FAN HEAT BAFFLE
		1	2 YEAR PARTS WARRANTY
3	KEF - 3	1	GREASE BOX
		1	FAN BASE CERAMIC SEAL - DU/DR180HFA - INSTALLED AT PLANT - FOR GREASE DUCTS
		1	UNIT MOUNTED VFD FOR USE WITH ECPM03
		1	VFD MOUNTING BRACKET FOR DU/DR 180
		1	EXHAUST FAN HEAT BAFFLE
		1	2 YEAR PARTS WARRANTY
4	KEF - 4	1	GREASE BOX
		1	FAN BASE CERAMIC SEAL - DU/DR85HFA - INSTALLED AT PLANT - FOR GREASE DUCTS
		1	ECM WIRING PACKAGE - PWM SIGNAL FROM ECPM03 PREWIRE (TELCO MOTOR), CCW ROTATION
		1	2 YEAR PARTS WARRANTY
5	MAU - 1	1	INLET PRESSURE GAUGE, 0-35"
		1	MANIFOLD PRESSURE GAUGE, 0 TO 10" WC, 2 FURNACES
		1	COOLING OVERRIDE
		1	SHIP LOOSE GAS STRAINER 1 1/4"
		1	RTU BLOWER DOOR SWITCH
		1	2" MERV 13 FILTERS FOR RTU4 (QTY. 12)
		1	2" MERV 8 FILTERS FOR RTU4 (QTY. 12)
		1	OVERHEAT STAT
		1	TOTAL CFM MONITORING
		1	BLOWER STOP DELAY. ALLOWS RESIDUAL HEAT TO BE TRANSFERRED INTO THE SUPPLY AIR AFTER HEATING HAS STOPPED. FACTORY SET AT: 90 SECS FOR IBT, 30 SECS FOR DF
		1	OCCUPIED SCHEDULING
		1	INTAKE FIRESTAT SET TO 135°F
		1	FREEZESTAT
		1	DISCHARGE FIRESTAT SET TO 240°F
		1	CASLINK BUILDING MONITORING SYSTEM - INTERNET OR CELLULAR CONNECTION REQUIRED
		1	2" METAL MESH FILTERS FOR RTU4 OUTDOOR INTAKE
		1	24VAC FIRE INPUT
		1	VAV PACKAGE W/ 0-10VDC INPUT CONTROL (571 VFD INCLUDED)
		1	RTU4 NO RETURN - 100% OA
		1	RTU FIXED 100% OA INTAKE CONTROL
		1	RTU4 SIDE DISCHARGE
		1	30 TON MODULATING COOLING OPTION, 460/480V. 3CFS. R454B REFRIGERANT, VARIABLE SPEED COMPRESSOR, ECM CONDENSING FANS
		1	R454B LEAK DETECTOR OPTION FOR RTUS
		1	LOW AMBIENT COOLING OPERATION - DOWN TO 0F AMBIENT
		1	30 TON MODULATING REHEAT OPTION - SPACE DEWPOINT CONTROL. - R454B
		1	VFD FACTORY MOUNTED AND WIRED IN RTU COMMERCIAL CONTROL VESTIBULE
		1	SINGLE POINT ELECTRICAL CONNECTION FOR RTU. 750VA TRANSFORMER USED. IF A NON-DCV PREWIRE CONTROLS THIS UNIT, THE #28, #47, "MA", OR "E2" PREWIRE OPTION MUST BE SELECTED. DOES NOT PROVIDE SUPPLY STARTER IN PREWIRE
		1	RTUVZH170 COMPRESSOR SOUND BLANKET 460/575V - FACTORY INSTALLED
		1	LOAD REACTOR MOUNTED IN FAN
		1	5 YEAR ENTIRE UNIT PARTS WARRANTY, 10 YEAR ENTIRE UNIT PARTS WARRANTY WITH REMOTE MONITORING AND CAPTIVEAIRE SERVICE CONTRACT, 25 YEAR STAINLESS STEEL FURNACE PARTS WARRANTY (SEE ADDITIONAL DETAILS)
		1	EXTERIOR GAS CONNECTION PROVIDED BY FACTORY WITH QUICK SEAL AND ANTI-ROTATION BRACKET

FIELD COMMISSIONING SERVICES (FCX)

IF ORDERED, THE FCX ENGINEER WILL PERFORM ON-SITE ENGINEERING ANALYSIS OF CAPTIVEAIRE EQUIPMENT AND BUILDING INTEGRATION. TYPICALLY, THE ANALYSIS WILL BE PERFORMED AFTER THE SPACE HAS BEEN OCCUPIED FOR AN EXTENDED PERIOD OF TIME. ANY FIELD RELATED DISCREPANCIES THAT ARE DISCOVERED DURING THE ANALYSIS WILL BE BROUGHT TO THE ATTENTION OF THE RESPONSIBLE PARTY AND SITE CONTACT. THESE ISSUES WILL BE DOCUMENTED AND FORWARDED TO THE APPROPRIATE SALES OFFICE. IF THE FCX ENGINEER HAS TO RESOLVE A DISCREPANCY THAT IS A FIELD ISSUE, THE SITE CONTACT AND SALES OFFICE WILL BE NOTIFIED. SHOULD A RETURN TRIP BE REQUIRED TO PERFORM ANY ADDITIONAL TASKS THERE WILL BE ADDITIONAL TRIP CHARGES. DURING THE ANALYSIS THE FCX ENGINEER WILL ADDRESS ANY DISCREPANCY THAT IS THE FAULT OF THE MANUFACTURER. IF THE ISSUE CANNOT BE RESOLVED BY THE ENGINEER, THE ISSUE WILL BE DOCUMENTED AND FORWARDED TO THE APPROPRIATE SALES OFFICE AND CAS SERVICE REGION. THERE WILL BE NO ADDITIONAL CHARGES FOR MANUFACTURER DISCREPANCIES.

HMI SCHEDULE

UNIT NUMBER	HMI #	HMI LOCATION	TEMP AVERAGING	MODBUS ADDRESS
FAN #5	HMI #1 - UNIT	IN UNIT	NOT AVERAGED	55
FAN #5	HMI #2 - SPACE		AVERAGED	56

FANS #1 (KEF - 1), #4 (KEF - 4) - DU85HFA EXHAUST FAN

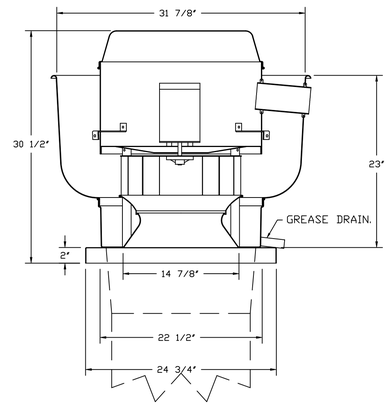

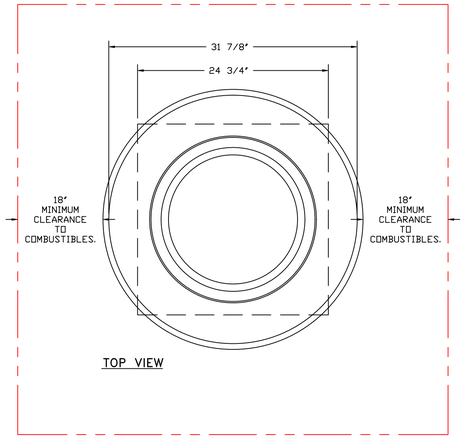

FEATURES:

- DIRECT DRIVE CONSTRUCTION (NO BELTS/PULLEYS).
- ROOF MOUNTED FANS.
- RESTAURANT MODEL.
- UL705 AND UL762 AND ULC-S645
- VARIABLE SPEED CONTROL.
- INTERNAL WIRING.
- THERMAL OVERLOAD PROTECTION (SINGLE PHASE).
- HIGH HEAT OPERATION 300°F (149°C).
- GREASE CLASSIFICATION TESTING.
- NEMA 3R SAFETY DISCONNECT SWITCH.

NORMAL TEMPERATURE TEST
EXHAUST FAN MUST OPERATE CONTINUOUSLY WHILE EXHAUSTING AIR AT 300°F (149°C) UNTIL ALL FAN PARTS HAVE REACHED THERMAL EQUILIBRIUM, AND WITHOUT ANY DETERIORATING EFFECTS TO THE FAN WHICH WOULD CAUSE UNSAFE OPERATION.

ABNORMAL FLARE-UP TEST
EXHAUST FAN MUST OPERATE CONTINUOUSLY WHILE EXHAUSTING BURNING GREASE VAPORS AT 600°F (316°C) FOR A PERIOD OF 15 MINUTES WITHOUT THE FAN BECOMING DAMAGED TO ANY EXTENT THAT COULD CAUSE AN UNSAFE CONDITION.

OPTIONS

- GREASE BOX.
- FAN BASE CERAMIC SEAL - DU/DR85HFA - INSTALLED AT PLANT - FOR GREASE DUCTS.
- ECM WIRING PACKAGE - PWM SIGNAL FROM ECPM03 PREWIRE (TELCO MOTOR), CCW ROTATION.
- 2 YEAR PARTS WARRANTY.

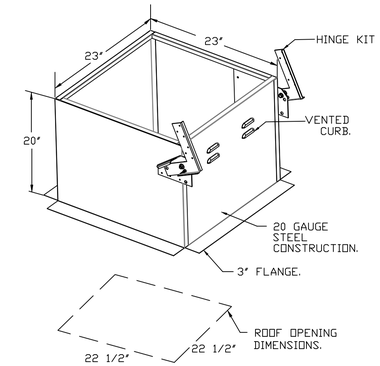

REVISIONS

DESCRIPTION	DATE:

CAPTIVEAIRE
www.captiveaire.com
Detroit Mechanical
38255 West Ten Mile Road, Farmington Hills, MI, 48335 PHONE: (248) 658 - 0509 FAX: 9195168735 EMAIL: reg123@captiveaire.com

Harbor Beach Home Ec R2
402 South 5th Street,
Harbor Beach, MI, 48441

DATE: 8/3/2026

DWG.#: 8615075

DRAWN BY: alex.donner

SCALE: 3/4" = 1'-0"

MASTER DRAWING

SHEET NO. 10

FANS #2 (KEF - 2), #3 (KEF - 3) - DU180HFA EXHAUST FAN

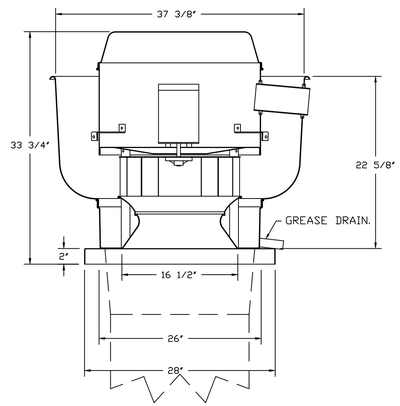

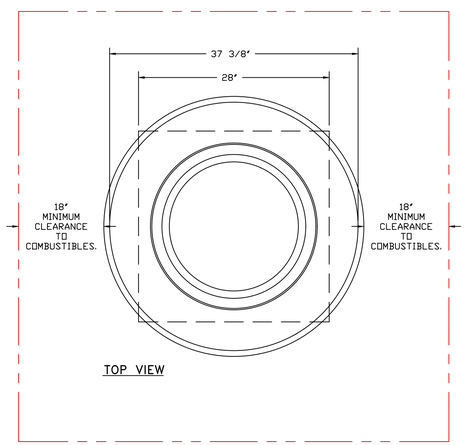

FEATURES:

- DIRECT DRIVE CONSTRUCTION (NO BELTS/PULLEYS).
- ROOF MOUNTED FANS.
- RESTAURANT MODEL.
- UL705 AND UL762 AND ULC-S645
- VARIABLE SPEED CONTROL.
- INTERNAL WIRING.
- THERMAL OVERLOAD PROTECTION (SINGLE PHASE).
- HIGH HEAT OPERATION 300°F (149°C).
- GREASE CLASSIFICATION TESTING.
- NEMA 3R SAFETY DISCONNECT SWITCH.

NORMAL TEMPERATURE TEST
EXHAUST FAN MUST OPERATE CONTINUOUSLY WHILE EXHAUSTING AIR AT 300°F (149°C) UNTIL ALL FAN PARTS HAVE REACHED THERMAL EQUILIBRIUM, AND WITHOUT ANY DETERIORATING EFFECTS TO THE FAN WHICH WOULD CAUSE UNSAFE OPERATION.

ABNORMAL FLARE-UP TEST
EXHAUST FAN MUST OPERATE CONTINUOUSLY WHILE EXHAUSTING BURNING GREASE VAPORS AT 600°F (316°C) FOR A PERIOD OF 15 MINUTES WITHOUT THE FAN BECOMING DAMAGED TO ANY EXTENT THAT COULD CAUSE AN UNSAFE CONDITION.

OPTIONS

- GREASE BOX.
- FAN BASE CERAMIC SEAL - DU/DR180HFA - INSTALLED AT PLANT - FOR GREASE DUCTS.
- UNIT MOUNTED VFD FOR USE WITH ECPM03.
- VFD MOUNTING BRACKET FOR DU/DR 180.
- EXHAUST FAN HEAT BAFFLE.
- 2 YEAR PARTS WARRANTY.

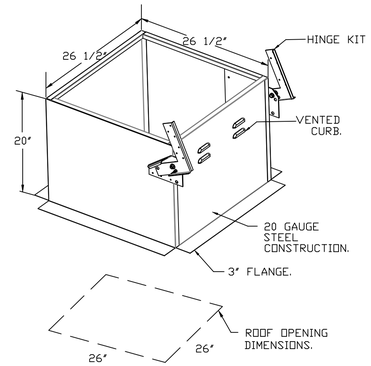

REVISIONS

DESCRIPTION	DATE:

CAPTIVEAIRE
www.captiveaire.com

Detroit Mechanical
38255 West Ten Mile Road, Farmington Hills, MI, 48335 PHONE: (248) 658 - 0509 FAX: 9195168735 EMAIL: reg123@captiveaire.com

Harbor Beach Home Ec R2
402 South 5th Street,
Harbor Beach, MI, 48441

DATE: 8/3/2026

DWG.#: 8615075

DRAWN BY: alex.donner

SCALE: 3/4" = 1'-0"

MASTER DRAWING

SHEET NO.
11

FAN #5 CAS-HVAC4-I.700-30-30T-DOAS - HEATER (MAU - 1)

NOTES:
1. DO NOT OBSTRUCT OUTSIDE AIR INLET, OUTSIDE AIR COIL OR OUTSIDE AIR FAN.
2. ( ) DENOTES CORNER WEIGHT.
3. CONNECTION FROM BREAKER TO UNITS SAFETY DISCONNECT SWITCH TO BE COPPER WIRE ONLY.
4. EXTERIOR GAS CONNECTION PROVIDED BY FACTORY WITH QUICK SEAL AND ANTI-ROTATION BRACKET.
5. PROVIDED GAS STRAINER TO BE INSTALLED UPSTREAM OF UNIT GAS CONNECTION

*NOTE: INTEGRAL CO2 MONITORING AND CONTROL CAPABILITIES FOR ALL SPACE MOUNTED THERMOSTATS.

***NOTE: THIS UNIT IS INTENDED TO SERVE IN PLACE OF THE KITCHEN HVAC ROOF TOP UNIT (RTU) IN ADDITION TO PROVIDING APPROPRIATE MAKE-UP AIR FOR THE KITCHEN HOOD(S). RTU AND ASSOCIATED DUCTWORK SHALL BE REMOVED FROM SCOPE UNLESS REQUIRED FOR INTERNAL LOAD ESTIMATES. FINAL DESIGN SHALL BE REVIEWED AND APPROVED BY THE ENGINEER OF RECORD.**

*NOTE: SUPPLY DUCT MUST BE INSTALLED TO MEET SMACNA STANDARDS. A MINIMUM STRAIGHT DUCT LENGTH MUST BE MAINTAINED DOWNSTREAM OF UNIT DISCHARGE AS OUTLINED IN AMCA PUBLICATION 201. WHEN USING RECTANGULAR DUCTWORK, ELBOWS MUST BE RADIUS THROAT, RADIUS BACK WITH TURNING VANES. FLEXIBLE DUCTWORK AND SQUARE THROAT/SQUARE BACK ELBOWS SHOULD NOT BE USED. ANY TRANSITION AND/OR TURNS IN THE DUCTWORK WILL CAUSE SYSTEM EFFECT. SYSTEM EFFECT WILL DRASTICALLY INCREASE STATIC PRESSURE AND REDUCE AIRFLOW. DO NOT RELY ON UNIT TO SUPPORT DUCT IN ANY WAY. FAILURE TO PROPERLY SIZE DUCTWORK MAY CAUSE SYSTEM EFFECTS AND REDUCE PERFORMANCE OF THE EQUIPMENT.
SUGGESTED SUPPLY STRAIGHT DUCT SIZE IS 33-7/8" x 21-1/8".

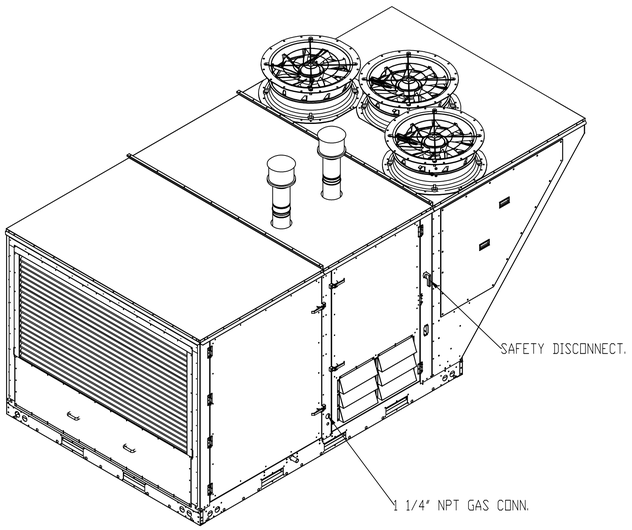

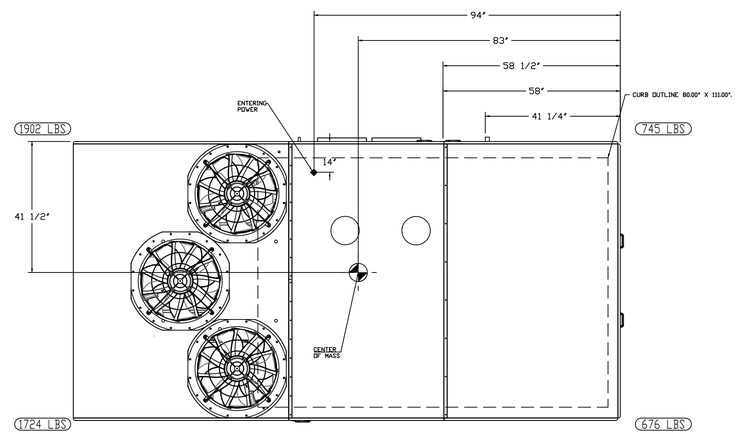

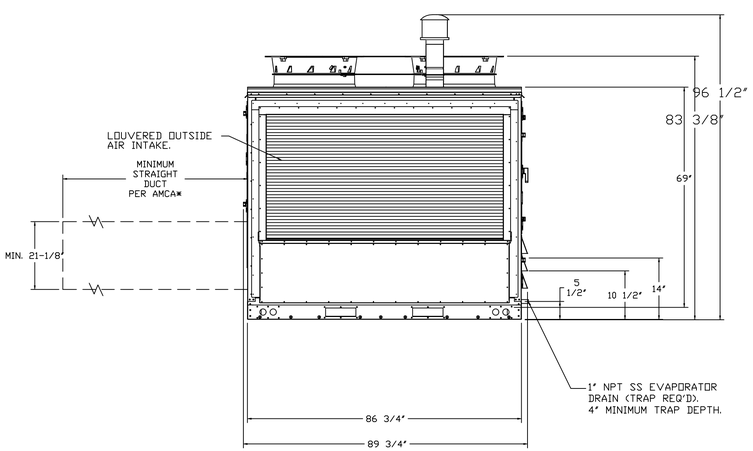

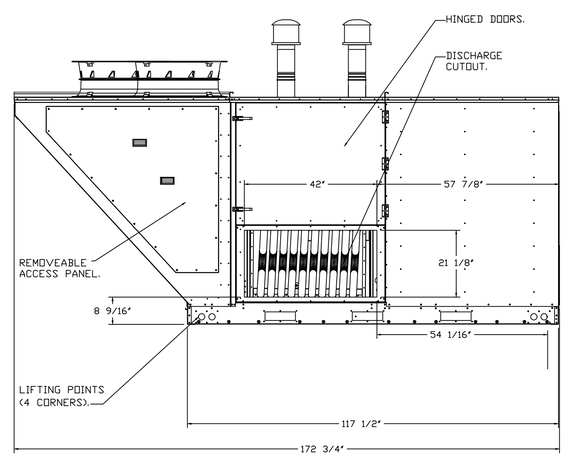

REVISIONS

DESCRIPTION	DATE:

CAPTIVEAIRE
www.captiveaire.com
Detroit Mechanical
38255 West Ten Mile Road, Farmington Hills, MI. 48335 PHONE: (248) 658 - 0509 FAX: 9195168735 EMAIL: reg123@captiveaire.com

Harbor Beach Home Ec R2
402 South 5th Street,
Harbor Beach, MI, 48441

DATE: 8/3/2026

DWG.#: 8615075

DRAWN BY: alex.donner

SCALE: 1/2" = 1'-0"

MASTER DRAWING

SHEET NO. 12

SPACE SENSOR MOUNTING DETAIL

SPACE SENSORS CAN BE USED TO MEASURE ROOM TEMPERATURE, HUMIDITY, AND CO2 LEVELS. SENSORS CAN BE ORDERED WITH OR WITHOUT AN HMI (SCREEN). SPACE SENSORS SHOULD BE PLACED IN LOCATIONS THAT ARE REPRESENTATIVE OF THE SPACE CONDITIONS.
DO NOT MOUNT SENSORS:
-IN DIRECT SUNLIGHT
-NEAR HEAT SOURCES
-ABOVE A SOURCE OF MOISTURE
-DIRECTLY BENEATH A SUPPLY AIR REGISTER

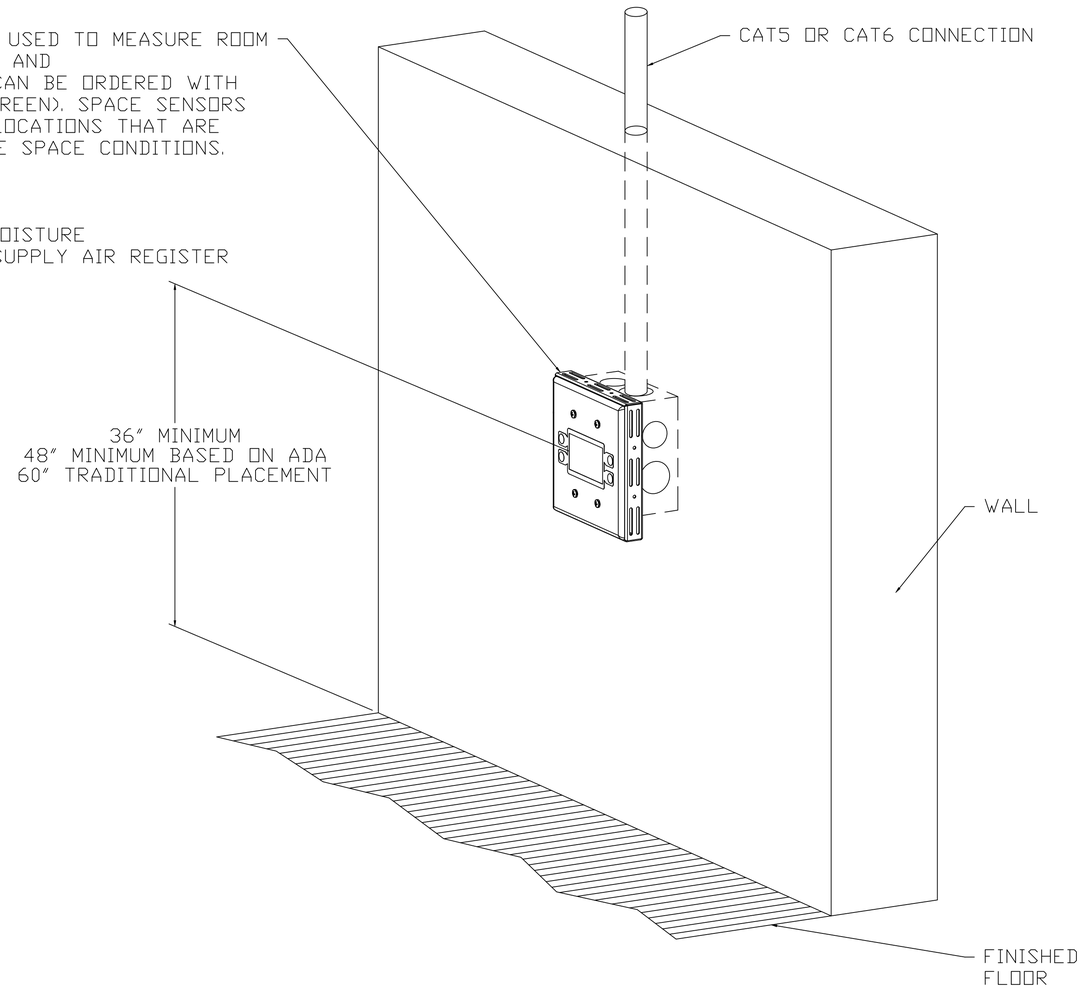

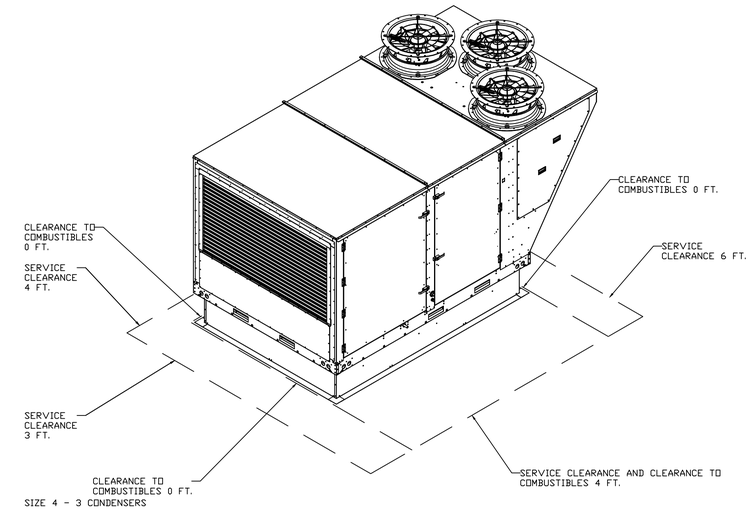

REVISIONS

DESCRIPTION	DATE:

CAPTIVEAIRE
www.captiveaire.com
Detroit Mechanical
38255 West Ten Mile Road, Farmington Hills, MI, 48335 PHONE: (248) 658 - 0509 FAX: 9195168735 EMAIL: reg123@captiveaire.com

Harbor Beach Home Ec R2
402 South 5th Street,
Harbor Beach, MI, 48441

DATE: 8/3/2026

DWG.#: 8615075

DRAWN BY: alex.donner

SCALE: 3/4" = 1'-0"

MASTER DRAWING

SHEET NO. 13

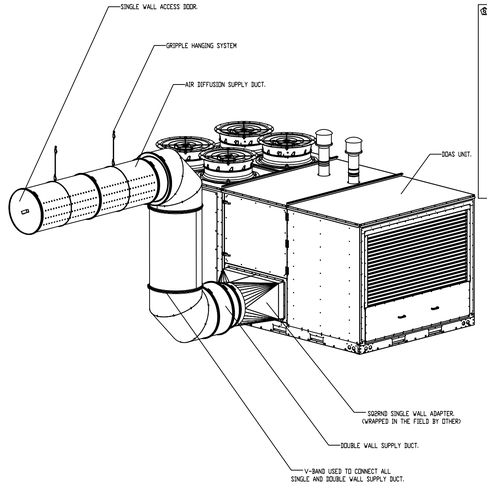

AIR DIFFUSION SUPPLY DUCT SPECIFICATIONS:
PROVIDE AIR DIFFUSION SUPPLY DUCT EQUAL TO CAPTIVEAIRE SYSTEMS MODEL DW-S90HC), DW-S90HC), & DW-S180HC).
THREE DISTINCT HOLE PATTERN OPTIONS TO COVER A VARIETY OF CEILING HEIGHTS.
NO ADDITIONAL DIFFUSERS REQUIRED, AS THE DUCT ITSELF PROVIDES AIR DIFFUSION.
MADE OF HIGH QUALITY STAINLESS STEEL DESIGNED TO LAST 20+ YEARS.
HIGH INDUCTION SUPPLY DUCT IS CONSTRUCTED USING 24 GAUGE, 430 SS - 5" THRU 24".
HIGH INDUCTION SUPPLY DUCT IS CONSTRUCTED USING 20 GAUGE, 430 SS - 26" THRU 36".
QUICK ONSITE ASSEMBLY USING EPDM GASKETS & UNIVERSAL V-BANDS.
DOUBLE WALL SUPPLY DUCT AVAILABLE FOR INTERIOR AND EXTERIOR SPACES, EITHER CONDITIONED OR UNCONDITIONED.
DOUBLE WALL SUPPLY DUCT AVAILABLE IN DW-1S, DW-2S, & DW-3S TO MEET SPECIFIC REGIONAL "R" VALUE REQUIREMENTS.

Insulation R-Value Recommendations		
Supply Duct Type	Minimum R-value	Space Type
Single Wall - S & -HC	N/A	Conditioned Space Only
Double Wall - 1S	R-4	Unconditioned Interior Space Only
Double Wall - 2S	R-8	Unconditioned Space Climate Zones 1-4
Double Wall - 3S	R-12	Unconditioned Space Climate Zones 5-8

DOUBLE WALL SUPPLY DUCT IS INSULATED WITH A 24 GAUGE 430 STAINLESS OUTER SHELL.
AIR DIFFUSION SUPPLY DUCT COMPLIES WITH SMACNA (SHEET METAL AND AIR CONDITIONING CONTRACTORS) BEST PRACTICES.
POSITIONING OF SPRINKLERS TO AVOID OBSTRUCTION TO DISCHARGE, SEE NFPA 13, TABLE 8.12.5.1.1.

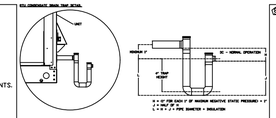

GREASE DUCT & CHIMNEY SPECIFICATIONS:
PROVIDE GREASE DUCT EQUAL TO CAPTIVEAIRE SYSTEMS MODEL "DW"
ROUND 20 GAUGE 430 STAINLESS STEEL DUCTWORK. MODEL "DW"
IS LISTED TO UL-1978 AND IS INSTALLED USING "V" CLAMP LOCKING
CONNECTIONS SEALED WITH 3M FIRE BARRIER 2000 PLUS. MODEL "DW"
DOES NOT REQUIRE WELDING PROVIDING IT HAS BEEN INSTALLED PER
THE MANUFACTURES INSTALLATION GUIDE.
PROVIDE RATED ACCESS DOORS AT EVERY CHANGE IN DIRECTION AND EVERY 12' ON CENTER.
PER MANUFACTURES LISTING MODEL "DW" HORIZONTAL RUNS LESS THAN 75 FT. CAN BE
SLOPED 1/16" PER 12', HORIZONTAL RUNS MORE THAN 75 FT. CAN BE SLOPED 3/16" PER 12'.
DUCT SHOULD BE SLOPED AS MUCH AS POSSIBLE TO REDUCE THE CHANCE OF GREASE
ACCUMULATION IN HORIZONTAL RUNS.

IF THE DUCT OR CHIMNEY IS WITHIN 18 INCHES OF COMBUSTIBLE MATERIAL, PROVIDE
UL-2221 OR UL-103 HT LISTED DOUBLE WALL GREASE DUCT OR DOUBLE WALL CHIMNEY
EQUAL TO CAPTIVEAIRE SYSTEMS MODEL "DW- 2R, 2R TYPE HT, 3R, OR 32" ROUND 20 GAUGE
430 STAINLESS INNER DUCT INSULATED WITH A 24 GAUGE 430 STAINLESS OUTER SHELL.

CUSTOMER APPROVAL TO MANUFACTURE:
APPROVED AS SHOWN ☐
APPROVED WITH AS EXCEPTION THEN ☐
REVISE AND RESUBMIT ☐
SIGNATURE _____
YOUR TITLE _____ DATE _____ _____

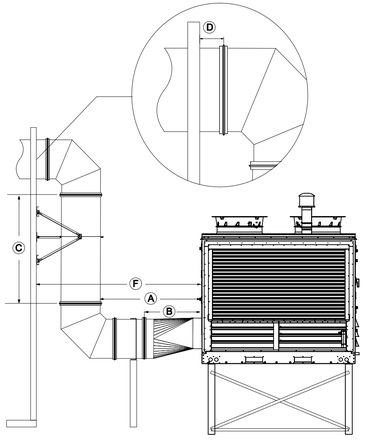

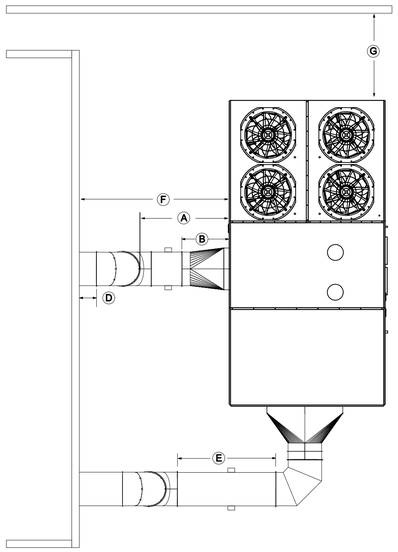

Side Discharge Requirements							
Unit Size	Dim. A	Dim. B	Dim. C	Dim. D	Dim. E	Dim. F	Dim. G
Size 4	4'-0 1/2"	2'-0"	10'-0"	0'-4"	15' SW / 8' DW	8'-2"	8'-2"

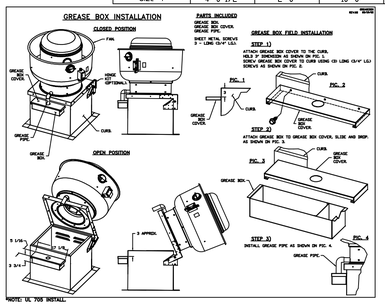

REVISIONS

DESCRIPTION	DATE:

CAPTIVEAIRE
www.captiveaire.com
Detroit Mechanical
38255 West Ten Mile Road, Farmington Hills, MI, 48335 PHONE: (248) 658 - 0509 FAX: 9195168735 EMAIL: reg123@captiveaire.com

Harbor Beach Home Ec R2
402 South 5th Street,
Harbor Beach, MI, 48441

DATE: 8/3/2026
DWG.#: 8615075
DRAWN BY: alex.donner
SCALE: 1/4" = 1'-0"
MASTER DRAWING
SHEET NO. 14

Exhaust Fan Wiring

JOB 8615075 - Harbor Beach Home Ec R2		
DRAWING NUMBER EXH8615075-1	SHIP DATE 8/3/2026	MODEL DU85HFA

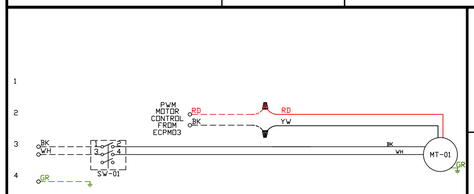

Installed Options

Component Identification

Label	Description	Location
MT-01	Fan Motor	[3]
SW-01	Main disconnect switch	[3]

MOTOR INFO

EXHAUST 1.0HP-115V-1P-11.6FLA

ELECTRICAL INFORMATION

MOTOR/CTRL MCA: 14.5A
MOTOR/CTRL MOP: 25A

NOTES

- - - - DENOTES FIELD WIRING
——— DENOTES INTERNAL WIRING

WIRE COLOR

BK - BLACK	YW - YELLOW
BL - BLUE	GR - GREEN
BR - BROWN	GY - GRAY
OR - ORANGE	PR - PURPLE
RD - RED	PK - PINK
WH - WHITE	

Exhaust Fan Wiring

JOB 8615075 - Harbor Beach Home Ec R2		
DRAWING NUMBER EXH8615075-2	SHIP DATE 8/3/2026	MODEL DU180HFA

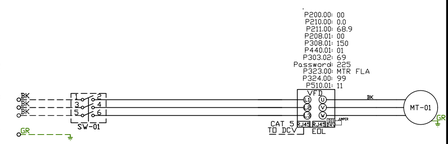

Installed Options

Component Identification

Label	Description	Location
MT-01	Fan Motor	[3]
SW-01	Main disconnect switch	[3]

MOTOR INFO

EXHAUST 1.5HP-208V-3P-6.6FLA
VFD: I51BP215D0000ACBSS

ELECTRICAL INFORMATION

MOTOR/CTRL MCA: 8.9A
MOTOR/CTRL MOP: 15A

NOTES

- - - - DENOTES FIELD WIRING
——— DENOTES INTERNAL WIRING

WIRE COLOR

BK - BLACK	YW - YELLOW
BL - BLUE	GR - GREEN
BR - BROWN	GY - GRAY
OR - ORANGE	PR - PURPLE
RD - RED	PK - PINK
WH - WHITE	

Exhaust Fan Wiring

JOB 8615075 - Harbor Beach Home Ec R2		
DRAWING NUMBER EXH8615075-3	SHIP DATE 8/3/2026	MODEL DU180HFA

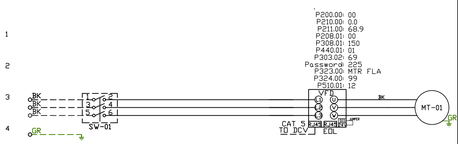

Installed Options

Component Identification

Label	Description	Location
MT-01	Fan Motor	[3]
SW-01	Main disconnect switch	[3]

MOTOR INFO

EXHAUST 1.5HP-208V-3P-6.6FLA
VFD: I51BP215D0000ACBSS

ELECTRICAL INFORMATION

MOTOR/CTRL MCA: 8.9A
MOTOR/CTRL MOP: 15A

NOTES

- - - - DENOTES FIELD WIRING
——— DENOTES INTERNAL WIRING

WIRE COLOR

BK - BLACK	YW - YELLOW
BL - BLUE	GR - GREEN
BR - BROWN	GY - GRAY
OR - ORANGE	PR - PURPLE
RD - RED	PK - PINK
WH - WHITE	

REVISIONS

DESCRIPTION	DATE:

CAPTIVEAIRE
www.captiveaire.com
Detroit Mechanical
38255 West Ten Mile Road, Farmington Hills, MI, 48335 PHONE: (248) 658 - 0509 FAX: 9195168735 EMAIL: reg123@captiveaire.com

Harbor Beach Home Ec R2
402 South 5th Street,
Harbor Beach, MI, 48441

DATE: 8/3/2026

DWG.#: 8615075

DRAWN BY: alex.donner

SCALE: 3/4" = 1'-0"

MASTER DRAWING

SHEET NO. 15

Exhaust Fan Wiring	JOB 8615075 - Harbor Beach Home Ec R2	
DRAWING NUMBER EXH8615075-4	SHIP DATE 8/3/2026	MODEL DU85HFA

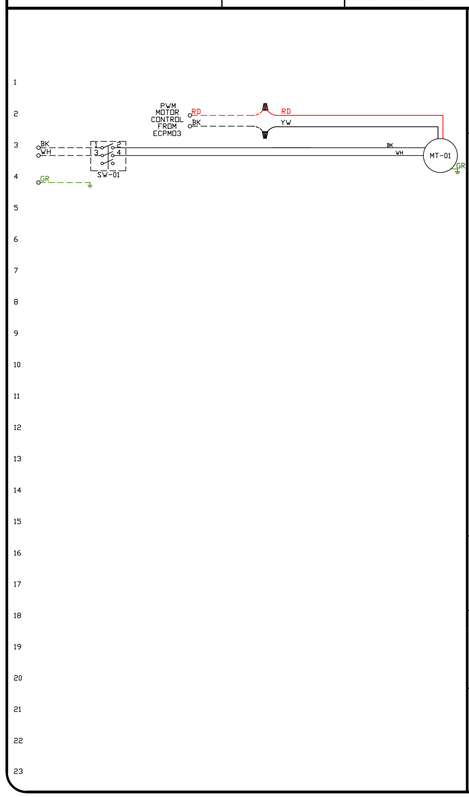

Installed Options

Component Identification

Label	Description	Location
MT-01	Fan Motor	[3]
SW-01	Main disconnect switch	[3]

MOTOR INFO

EXHAUST 10HP-115V-1P-116FLA

ELECTRICAL INFORMATION

MOTOR/CTRL MCA: 145A
MOTOR/CTRL MOP: 25A

NOTES

- - - - DENOTES FIELD WIRING
——— DENOTES INTERNAL WIRING

WIRE COLOR

BK - BLACK	YW - YELLOW
BL - BLUE	GR - GREEN
BR - BROWN	GY - GRAY
OR - ORANGE	PR - PURPLE
RD - RED	PK - PINK
WH - WHITE	

REVISIONS

DESCRIPTION	DATE:

CAPTIVEAIRE
www.captiveaire.com

Detroit Mechanical

38255 West Ten Mile Road, Farmington Hills, MI, 48335 PHONE: (248) 658 - 0509 FAX: 9195168735 EMAIL: reg123@captiveaire.com

Harbor Beach Home Ec R2
402 South 5th Street,
Harbor Beach, MI, 48441

DATE: 8/3/2026

DWG.#: 8615075

DRAWN BY: alex.donner

SCALE: 3/4" = 1'-0"

MASTER DRAWING

SHEET NO. 16

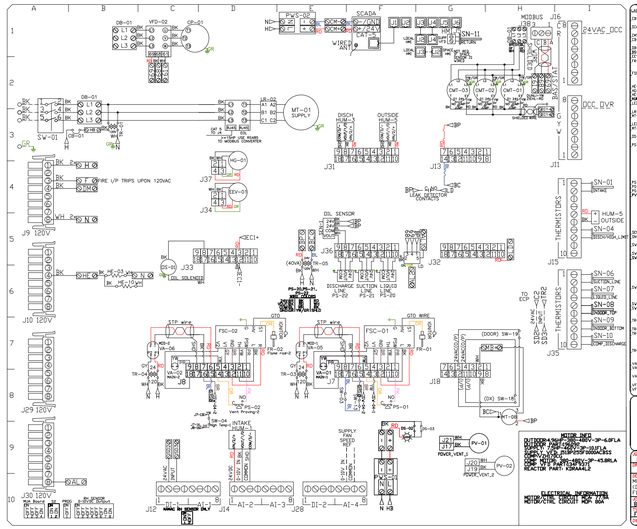

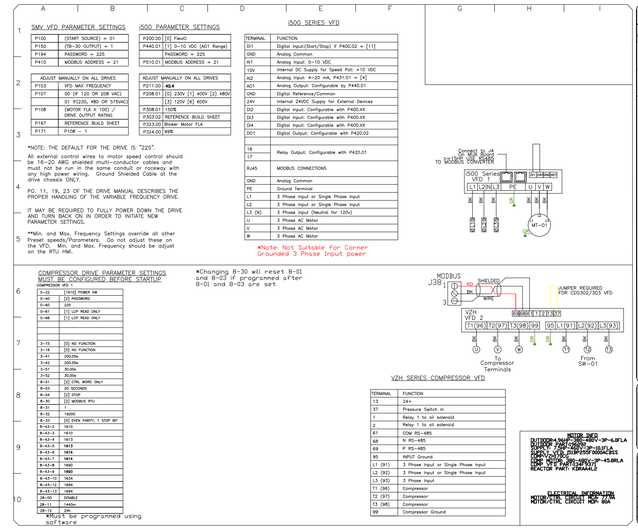

5MV VFD PARAMETER SETTINGS

P150	(START SOURCE) = 01
P150	(TB-30 OUTPUT) = 1
P194	PASSWORD = 225
P410	MODBUS ADDRESS = 21

ADJUST MANUALLY ON ALL DRIVES	
P103	VFD MAX FREQUENCY
P107	(SO OF 120 OR 208 VAC) 01 (F230), 480 OR 575VAC)
P108	(MOTOR FLA X 100) / DRIVE OUTPUT RATING
P167	REFERENCE BUILD SHEET
P171	P108 = 1

500 PARAMETER SETTINGS

P200.00	[0] Fwd/C
P440.01	[1] 0-10 VDC (AI1 Range)
	PASSWORD = 225
P510.01	MODBUS ADDRESS = 21

ADJUST MANUALLY ON ALL DRIVES	
P211.00	40.4
P208.01	[0] 230V [1] 400V [2] 480V [3] 120V [4] 600V
P308.01	1505
P303.02	REFERENCE BUILD SHEET
P323.00	Blower Motor FLA
P324.00	995

*NOTE: THE DEFAULT FOR THE DRIVE IS "225".

All external control wires to motor speed control should be 16-20 AWG shielded multi-conductor cables and must not be run in the same conduit or raceway with any AC power wiring. Ground Shielded Cable at the drive chassis ONLY.

PG. 11, 19, 23 OF THE DRIVE MANUAL DESCRIBES THE PROPER HANDLING OF THE VARIABLE FREQUENCY DRIVE.

IT MAY BE REQUIRED TO FULLY POWER DOWN THE DRIVE AND TURN BACK ON IN ORDER TO INITIATE NEW PARAMETER SETTINGS.

**Min. and Max. Frequency Settings override all other Preset speeds/Parameters. Do not adjust these on the VFD. Min. and Max. Frequency should be adjust on the RTU HMI.

I500 SERIES VFD

TERMINAL	FUNCTION
D1	Digital Input(Start/Stop) :P P400.02 = [11]
GND	Analog Common
A1	Analog Input: 0-10 VDC
10V	Internal DC Supply for Speed Pot: +10 VDC
A2	Analog Input: 4-20 mA, PA31.01 = [4]
AO1	Analog Output: Configurable by P440.01
GND	Digital Reference/Common
24V	Internal 24VDC Supply for External Devices
D2	Digital Input: Configurable with P400.XX
D13	Digital Input: Configurable with P400.XX
D4	Digital Input: Configurable with P400.XX
DO1	Digital Output: Configurable with P420.02
16	Relay Output: Configurable with P420.01
17	
RJ45	MODBUS CONNECTIONS
GND	Analog Common
PE	Ground Terminal
L1	3 Phase Input or Single Phase Input
L2	3 Phase Input or Single Phase Input
L3 (N)	3 Phase Input (Neutral for 120v)
U	3 Phase AC Motor
V	3 Phase AC Motor
W	3 Phase AC Motor

*Note: Not Suitable For Corner Grounded 3 Phase Input power

COMPRESSOR DRIVE PARAMETER SETTINGS MUST BE CONFIGURED BEFORE STARTUP

COMPRESSOR VFD

0-02	[4] VSI POWER UNIT
0-60	[2] PASSWORD
0-60	225
0-61	[1] LCP READ ONLY
0-66	[1] LCP READ ONLY
3-15	[0] NO FUNCTION
3-16	[0] NO FUNCTION
3-41	200.0Hz
3-42	200.0Hz
3-51	30.0Hz
3-52	30.0Hz
8-01	[2] CTRL WORD ONLY
8-03	20 SECONDS
8-04	[0] STOP
8-30	[2] MODBUS RTU
8-31	1
8-32	19200
8-33	[0] EVEN PARITY, 1 STOP BIT
8-42-1	1000
8-42-2	1013
8-42-3	1013
8-42-4	1013
8-42-5	1074
8-42-7	1074
8-42-8	1090
8-42-9	1080
8-42-10	1024
8-42-12	1094
8-42-13	1024
28-00	262852
28-13	240hr
28-14	240hr

*Changing 8-30 will reset 8-01 and 8-02 if programmed after 8-01 and 8-03 are set

*Must be programmed using software

VZH SERIES COMPRESSOR VFD

TERMINAL	FUNCTION
13	24v
37	Pressure Switch In
1	Relay 1 to oil solenoid
2	Relay 1 to oil solenoid
61	COM RS-485
68	N RS-485
69	P RS-485
95	INPUT Ground
L1 (91)	3 Phase Input or Single Phase Input
L2 (92)	3 Phase Input or Single Phase Input
L3 (93)	3 Phase Input
T1 (96)	Compressor
T2 (97)	Compressor
T3 (98)	Compressor
99	Compressor Ground

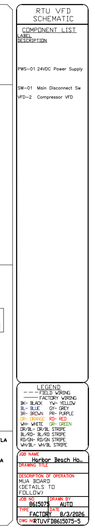

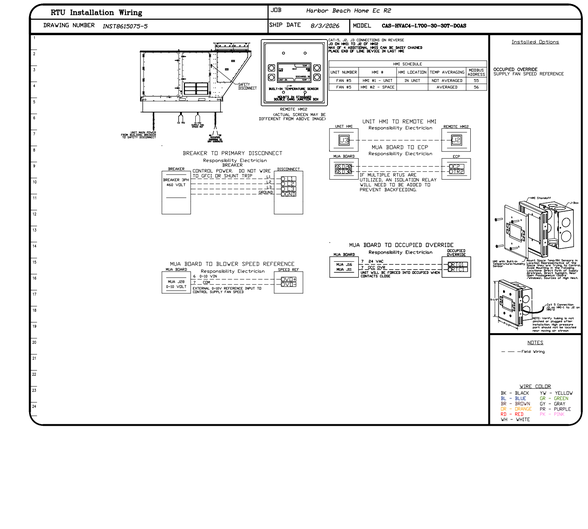

RTU Installation Wiring

DRAWING NUMBER	2NS78615075-5	JOB	Harbor Beach Home Ec R2
SHIP DATE	8/3/2026	MODEL	CAB-WVA04-LT00-30-30T-00A8

CAPTIVEAIRE
www.captiveaire.com
Detroit Mechanical
38255 West Ten Mile Road, Farmington Hills, MI, 48335 PHONE: (248) 658 - 0509 FAX: 9195168735 EMAIL: reg123@captiveaire.com

REVISIONS

DESCRIPTION	DATE:

Harbor Beach Home Ec R2
402 South 5th Street,
Harbor Beach, MI, 48441

DATE: 8/3/2026

DWG.#: 8615075

DRAWN BY: alex.donner

SCALE: 1/2" = 1'-0"

MASTER DRAWING

SHEET NO. 17

ELECTRICAL PACKAGE – JOB#8615075

NO	TAG	PACKAGE #	LOCATION	SWITCHES		OPTION
				LOCATION	QUANTITY	
1		SC-341110MA	UTILITY CABINET LEFT	UTILITY CABINET LEFT	1 LIGHT	SMART CONTROLS THERMOSTATIC CONTROL W/ RELAY ON/OFF WITH SUPPLY
				HOOD # 2	1 FAN	

FANS CONTROLLED					
FAN TAG	TYPE	ϕ	HP	VOLT	FLA
KEF – 1	EXHAUST	1	1.000	115	11.6
KEF – 2	EXHAUST	3	1.500	208	6.6
KEF – 3	EXHAUST	3	1.500	208	6.6
KEF – 4	EXHAUST	1	1.000	115	11.6
	SUPPLY	3	0.250	208	1.2

JOB NO 8615075 | MODEL NUMBER SC-341110MA | JOB NAME Harbor Beach Home Ec R2 | DRAWN BY | DATE 8/3/2026 | SCHEMATIC TYPE INSTALL | DWG NO ECP #1-1

DESCRIPTION OF OPERATION:
3 Phase w/ control for 4 Exhaust fans. 1 Supply Fan, Exhaust on in Fire, Lights out in Fire, Relay On/Off with Supply Fan, Fan(s) On/Off Thermostatically Controlled. Room temperature sensor shipped loose for field installation. INVERTER DUTY 3 PHASE MOTOR REQUIRED FOR USE WITH VFD.

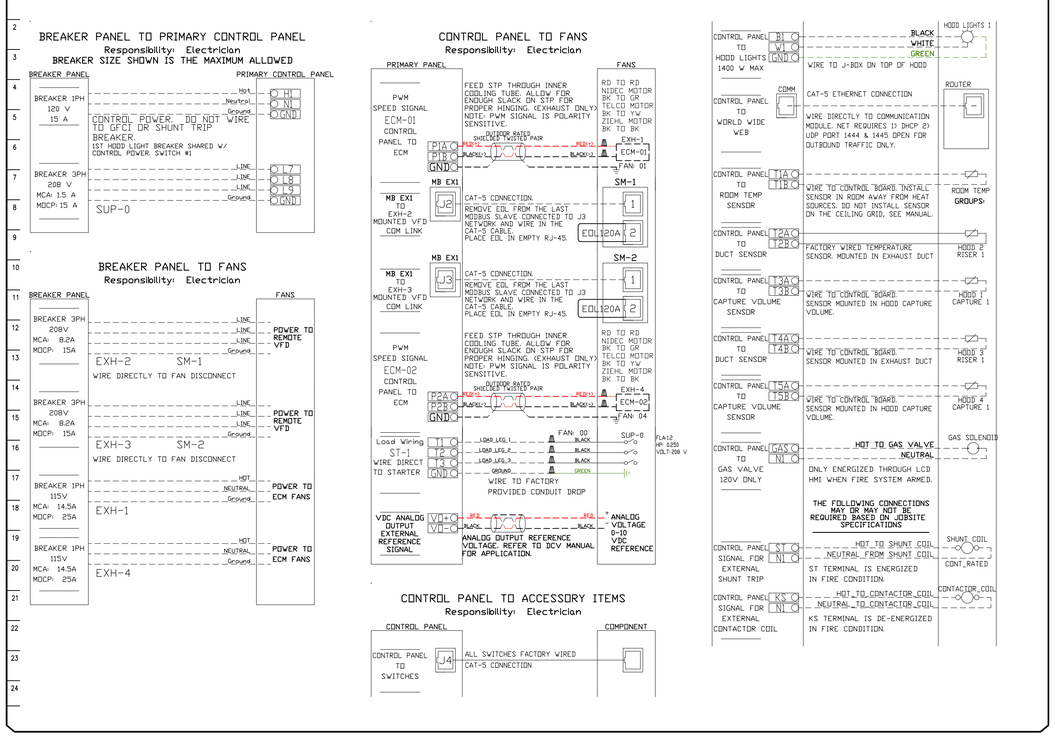

JOB NO 8615075 | MODEL NUMBER SC-341110MA | JOB NAME Harbor Beach Home Ec R2 | DRAWN BY | DATE 8/3/2026 | SCHEMATIC TYPE INSTALL | DWG NO ECP #1-2

DESCRIPTION OF OPERATION:
3 Phase w/ control for 4 Exhaust fans. 1 Supply Fan, Exhaust on in Fire, Lights out in Fire, Relay On/Off with Supply Fan, Fan(s) On/Off Thermostatically Controlled. Room temperature sensor shipped loose for field installation. INVERTER DUTY 3 PHASE MOTOR REQUIRED FOR USE WITH VFD.

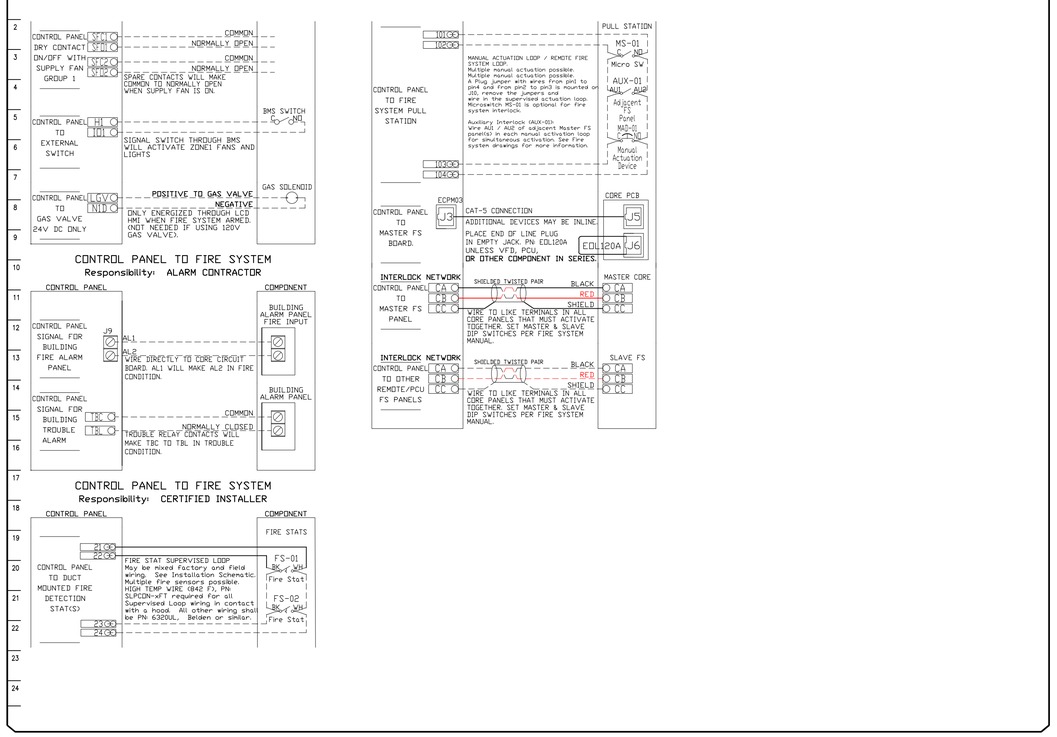

REVISIONS

DESCRIPTION	DATE:

CAPTIVEAIRE
www.captiveaire.com
Detroit Mechanical
38255 West Ten Mile Road, Farmington Hills, MI, 48335 PHONE: (248) 658 - 0509 FAX: 9195168735 EMAIL: reg123@captiveaire.com

Harbor Beach Home Ec R2
402 South 5th Street,
Harbor Beach, MI, 48441

DATE: 8/3/2026

DWG.#: 8615075

DRAWN BY: alex.donner

SCALE: 3/4" = 1'-0"

MASTER DRAWING

SHEET NO. 18

JOB NO	MODEL NUMBER	DRAWN BY	SCHEMATIC TYPE	DESCRIPTION OF OPERATION:
8615075	SC-341110MA		INSTALL	Fire System #1 TANK FS - 42/43. Tank-based Fire Protection System equipped with Electronic Detection utilizing CORE board as a Listed Release Mechanism. Installed in Hood Utility Cabinet with integral hood prewire panel.
	JOB NAME: Harbor Beach Home Ec R2	DATE: 8/3/2026	DWG NO: ECP #1-3	

TANK PROTECTION ELECTRICAL DETAIL

03/18/2026 Rev. 03

ELECTRICIAN
1. WIRE MAIN CONTROL PANEL PER INCLUDED SCHEMATIC
2. WIRE ALL FANS PER INCLUDED SCHEMATIC
3. WIRE SHUNT TRIP BREAKER (OPTIONAL)
4. WIRE UDS APPLIANCE KILL SWITCH, IF EQUIPPED (OPTIONAL)
5. WIRE GAS VALVE

FS-1: MASTER

ELECTRICAL CONTRACTOR REQUIREMENT					
ITEM	CONNECTION IN PANEL	CONNECTION IN DEVICE	VOLTAGE	AMPERAGE	COMMENTS
SHUNT TRIP BREAKER (OPTIONAL)	ST & N1	BREAKER COIL (A1 & A2)	120 VAC	< 4 AMPS	ST TO A1 ON SHUNT BREAKER COIL, AND NEUTRAL TO A2 ON SHUNT TRIP BREAKER COIL
CONTROL PANEL POWER	H1 & N1 + GROUND	CIRCUIT BREAKER	120 VAC	15 AMPS	CONTROL PANEL POWER MUST NOT BE RUN THROUGH SHUNT TRIP BREAKER
UDS APPLIANCE KILL SWITCH (OPTIONAL)	KTS & N1	KTS & N1	120 VAC	< 4 AMPS	KILL SWITCH TERMINALS MUST BE IN SERIES WITH OTHER KILL SWITCHES
REMOTE 120VAC ANSUL AUTOMAN (OPTIONAL)	AU1, AU2	SOLENOID	120 VAC	< 6 AMPS	120V TO AU1, AU2 TO ANSUL ELECTRIC AUTOMAN, ANSUL SOLENOID TO NEUTRAL
*GAS VALVE ASCO	LGV & N1D (IF 24 VDC) GAS & N1 (IF 120 VAC)	RED/RED/GREEN	24 VDC OR 120 VAC	< 10 AMPS	IF 24 VDC - 2 WIRES & GROUND, N1D TO RED, LGV TO RED, AND GREEN TO GROUND IF 120 VAC - 2 WIRES & GROUND, GAS TO RED, N1 TO RED, AND GREEN TO GROUND
*GAS VALVE AGS	LGV & N1D (IF 24 VDC) GAS & N1 (IF 120 VAC)	-/G/+ (IF 24 VDC) L/G/N (IF 120 VAC)	24 VDC OR 120 VAC	< 10 AMPS	IF 24 VDC - 5 WIRES & GROUND, LGV TO (+), N1D TO (-), AND GREEN TO GROUND IF 120 VAC - 2 WIRES & GROUND, GAS TO (L), N1 TO (N), AND GREEN TO GROUND

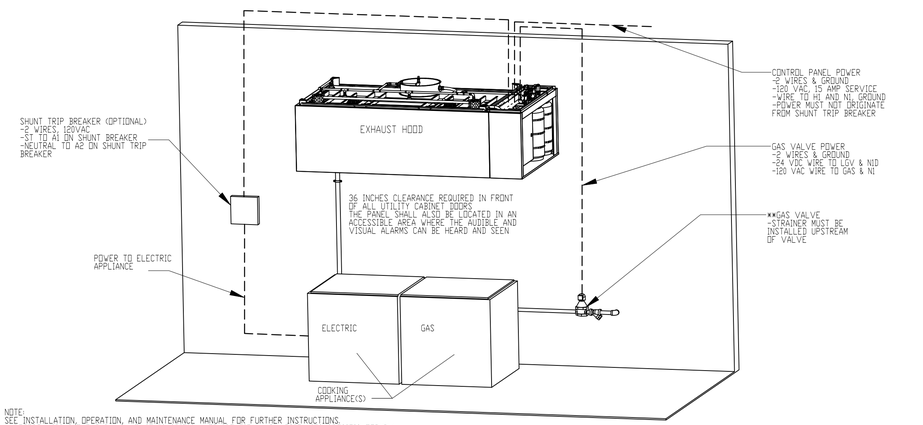

NOTE:
SEE INSTALLATION, OPERATION, AND MAINTENANCE MANUAL FOR FURTHER INSTRUCTIONS.
* BEFORE WIRING THE GAS VALVE, IT IS CRITICAL TO IDENTIFY AND VERIFY ITS SPECIFIC TERMINAL LABELS. DIFFERENT SERIES AND MANUFACTURERS USE VARYING NOMENCLATURE.
** AGS GAS VALVES 3/4" THROUGH 2" DIAMETERS DO NOT REQUIRE UPSTREAM STRAINERS AS THE STRAINER IS BUILT INTO THE GAS VALVE.

ATTENTION: LOW-VOLTAGE DC OR SIGNALING WIRE SHOULD BE ROUTED IN SEPARATE CONDUIT FROM ALL AC SOURCES

JOB NO	MODEL NUMBER	DRAWN BY	SCHEMATIC TYPE	DESCRIPTION OF OPERATION:
8615075	SC-341110MA		INSTALL	Fire System #1 TANK FS - 42/43. Tank-based Fire Protection System equipped with Electronic Detection utilizing CORE board as a Listed Release Mechanism. Installed in Hood Utility Cabinet with integral hood prewire panel.
	JOB NAME: Harbor Beach Home Ec R2	DATE: 8/3/2026	DWG NO: ECP #1-4	

TANK PROTECTION LOW-VOLTAGE DETAIL

10/01/2023 Rev. 3

ALARM CONTRACTOR:
1. WIRE MANUAL ACTUATION DEVICE(S), *REMOTE FIRESTAT(S), CORE INTERLOCK(S), FIRE SENSOR(S) AND FIRE ALARM CONTACTS
2. COMPLETE FINAL HOOKUP OF SYSTEM
3. VERIFY FINAL FIRE SYSTEM TEST
*REMOTE FIRESTAT(S) MAYBE BE REQUIRED DEPENDING ON THE DUCT LAYOUT AND HOOD TEMPERATURE RATING. REFERENCE MANUAL FOR LOCATION AND GUIDELINES.

FS-1: MASTER

ALARM CONTRACTOR REQUIREMENT					
ITEM	CONNECTION IN PANEL	CONNECTION ON DEVICE	VOLTAGE	AMPERAGE	COMMENTS
MANUAL ACTUATION DEVICE(S)	101 AND 104 102 AND 103	1 & 2	24 VDC	< 1.0 AMPS	WIRE MANUAL ACTUATION DEVICE TERMINAL 1 BETWEEN CORE PANEL TERMINALS 102 AND 103 WIRE MANUAL ACTUATION DEVICE TERMINAL 2 BETWEEN CORE PANEL TERMINALS 101 AND 104 JUMPER 101 TO 104 AND 102 TO 103 IF NO MANUAL ACTUATION DEVICE IS INSTALLED
MANUAL ACTUATION DEVICE COVER	N/A	N/A	N/A	N/A	MANUAL ACTUATION DEVICE COVER MUST BE INSTALLED IF SURFACE MOUNTED, USE COVER EXTENSION STI-6531B
REMOTE FIRESTAT SENSOR(S)	21 AND 24 22 AND 23	BLACK AND WHITE	24 VDC	< 1.0 AMPS	WIRE FIRE SENSOR WHITE WIRES BETWEEN HOOD CORE PANEL TERMINALS 22 AND 23 WIRE FIRE SENSOR BLACK WIRE BETWEEN HOOD CORE PANEL TERMINALS 21 AND 24 HIGH TEMP (842°F) #4416010LFED (WHT) & #4416010LFED (BLK)WIRE OR SIMILAR ONLY IF RAN OF HOOD; OTHERWISE BELDEN #6320UL OR SIMILAR PLENUM RATED WIRE; SEE FIGURE 1
FIRE ALARM CONTACT	AL1, AL2	VARIES	50V MAX (AC/DC)	UP TO 1 AMP	FIRE ALARM RELAY CONTACTS FOR BUILDING FIRE ALARM LOCATED IN THE CORE ELECTRICAL CONTROL PANEL
CORE INTERLOCK(S)	CA, CB, CC	CA, CB, CC	RS-485 COMMUNICATIONS SIGNAL		CORE SYSTEM (3) CA, TO CORE SYSTEM (2) CA, CORE SYSTEM (1) CB, TO CORE SYSTEM (2) CB CORE SYSTEM (1) CC, TO CORE SYSTEM (2) CC. USE BELDEN# 88760 OR SIMILAR WIRE
TROUBLE CONTACT	TBC, TBL, TOK	VARIES	MAX 120 VAC	UP TO 6 AMPS	WIRE TO TBL & TBC NORMALLY OPEN CONTACT, CLOSES IN TROUBLE CONDITION
CORE COMMUNICATIONS CABLE	RJ-45 Jack	INTERNET CONNECTION	SIGNAL	<1.0 AMPS	TYPICAL CONNECTION CAT5 CABLE TO LOCAL AREA NETWORK VIA ETHERNET SWITCH OR WIRELESS ROUTER WITH VALID INTERNET CONNECTION

FIRE ALARM CONTACT
-2 WIRES WIRED TO NORMALLY
OPEN CONTACTS (CLOSES IN
FIRE CONDITION)
-CORE CONTROL PANEL AL1
AND AL2
-SEE FIGURE 2

TROUBLE CONTACT
-2 WIRES TO NORMALLY
OPEN CONTACTS (CLOSE
IN TROUBLE CONDITION)
-CORE PANEL TERMINALS
TBL AND TBC
-SEE FIGURE 4

SUPERVISED LOOP
-4 WIRES, 24VDC CONNECT BLACK
WIRES BETWEEN 21 AND 24 IN PANEL,
CONNECT WHITE (OR RED) WIRES
BETWEEN 22 AND 23 IN PANEL
-ADDITIONAL FIRESTATS, WIRED IN
SUPERVISED LOOP
-USE HIGH TEMP (842°F)
#4416010LFED (WHT) &
#4416010LFED (BLK)WIRE ONLY IF
RAN OVER TOP OF HOOD,
OTHERWISE BELDEN #6320UL OR
SIMILAR PLENUM RATED WIRE
-SEE FIGURE 1

36 INCHES CLEARANCE REQUIRED IN FRONT
OF ALL UTILITY CABINET DOORS.
THE PANEL SHALL ALSO BE LOCATED IN AN
ACCESSIBLE AREA WHERE THE AUDIBLE AND
VISUAL ALARMS CAN BE HEARD AND SEEN

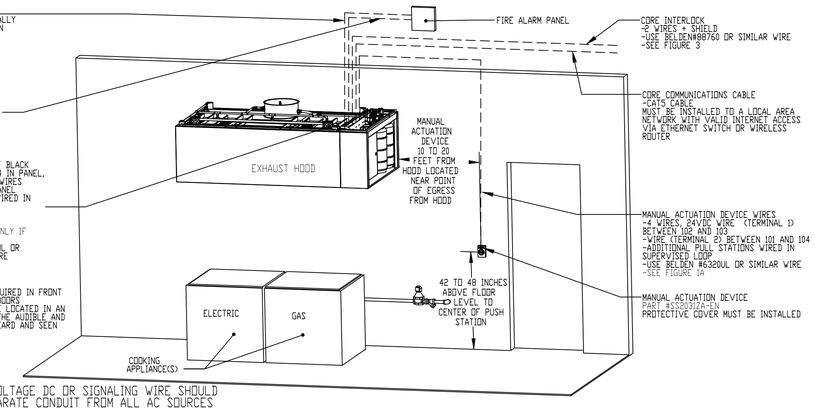

ATTENTION: LOW-VOLTAGE DC OR SIGNALING WIRE SHOULD BE ROUTED IN SEPARATE CONDUIT FROM ALL AC SOURCES

NOTE: SEE INSTALLATION, OPERATION, AND MAINTENANCE MANUAL FOR FURTHER INSTRUCTIONS

REVISIONS

DESCRIPTION	DATE:

CAPTIVEAIRE
www.captiveaire.com
Detroit Mechanical
38255 West Ten Mile Road, Farmington Hills, MI, 48335 PHONE: (248) 658 - 0509 FAX: 9195168735 EMAIL: reg123@captiveaire.com

Harbor Beach Home Ec R2
402 South 5th Street,
Harbor Beach, MI, 48441

DATE: 8/3/2026

DWG.#: 8615075

DRAWN BY: alex.donner

SCALE: 3/4" = 1'-0"

MASTER DRAWING

SHEET NO. 19

JOB NO	MODEL NUMBER	DRAWN BY	SCHEMATIC TYPE	DESCRIPTION OF OPERATION:
8615075	SC-341110MA		INSTALL	Fire System #1 TANK FS - 40/40. Tank-based Fire Protection System equipped with Electronic Detection utilizing CORE board as a Listed Release Mechanism. Installed in Hood Utility Cabinet with integral hood prewire panel.
	JOB NAME: Harbor Beach Home Ec R2	DATE: 8/3/2026	DWG NO: ECP #1-5	

TANK PROTECTION LOW-VOLTAGE FIGURES

10/01/2023 Rev. 17

FS-1: MASTER

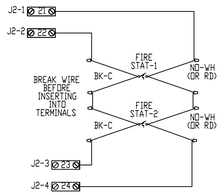

WIRING CONNECTIONS FOR FIRESTAT LOOP FIGURE 1

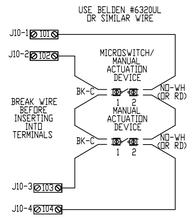

WIRING CONNECTIONS FOR MANUAL ACTUATION LOOP FIGURE 1A

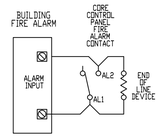

WIRING CONNECTIONS FOR FIRE ALARM CONTACT FIGURE 2

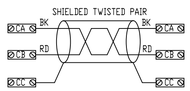

WIRING CONNECTIONS FOR CORE INTERLOCK FIGURE 3

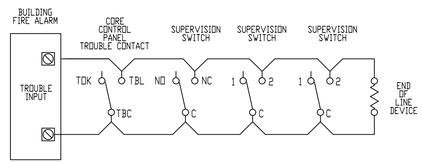

WIRING CONNECTIONS FOR TROUBLE CONTACT FIGURE 4

NOTE: SEE INSTALLATION, OPERATION, AND MAINTENANCE MANUAL FOR FURTHER INSTRUCTIONS

ATTENTION: LOW-VOLTAGE DC OR SIGNALING WIRE SHOULD BE ROUTED IN SEPARATE CONDUIT FROM ALL AC SOURCES

JOB NO	MODEL NUMBER	DRAWN BY	SCHEMATIC TYPE	DESCRIPTION OF OPERATION:
8615075	SC-341110MA		INSTALL	Fire System #2 TANK FS - 40/40. Tank-based Fire Protection System equipped with Electronic Detection utilizing CORE board as a Listed Release Mechanism. Installed in Hood Utility Cabinet separate from prewire. Includes 12" box housing circuit board, batteries, and terminals for connection to main control panel.
	JOB NAME: Harbor Beach Home Ec R2	DATE: 8/3/2026	DWG NO: ECP #1-6	

TANK PROTECTION ELECTRICAL DETAIL

03/18/2026 Rev. 03

ELECTRICIAN:
1. WIRE MAIN CONTROL PANEL PER INCLUDED SCHEMATIC
2. WIRE ALL FANS PER INCLUDED SCHEMATIC
3. WIRE SHUNT TRIP BREAKER (OPTIONAL)
4. WIRE UDS APPLIANCE KILL SWITCH, IF EQUIPPED (OPTIONAL)
5. WIRE GAS VALVE

FS-2: SLAVE

ELECTRICAL CONTRACTOR REQUIREMENT					
ITEM	CONNECTION IN PANEL	CONNECTION IN DEVICE	VOLTAGE	AMPERAGE	COMMENTS
SHUNT TRIP BREAKER (OPTIONAL)	ST & N1	BREAKER COIL (A1 & A2)	120 VAC	< 4 AMPS	ST TO A1 ON SHUNT BREAKER COIL, AND NEUTRAL TO A2 ON SHUNT TRIP BREAKER COIL
CONTROL PANEL POWER	H1 & N1 + GROUND	CIRCUIT BREAKER	120 VAC	15 AMPS	CONTROL PANEL POWER MUST NOT BE RUN THROUGH SHUNT TRIP BREAKER
UDS APPLIANCE KILL SWITCH (OPTIONAL)	KTS & N1	KTS & N1	120 VAC	< 4 AMPS	KILL SWITCH TERMINALS MUST BE IN SERIES WITH OTHER KILL SWITCHES
REMOTE 120VAC ANSUL AUTOMAN (OPTIONAL)	AU1, AU2	SOLENOID	120 VAC	< 6 AMPS	120V TO AU1, AU2 TO ANSUL ELECTRIC AUTOMAN, ANSUL SOLENOID TO NEUTRAL
*GAS VALVE ASCO	LGV & N1D (IF 24 VDC) GAS & N1 (IF 120 VAC)	RED/RED/GREEN	24 VDC OR 120 VAC	< 1.0 AMPS	IF 24 VDC - 2 WIRES & GROUND, N1D TO RED, LGV TO RED, AND GREEN TO GROUND IF 120 VAC - 2 WIRES & GROUND, GAS TO RED, N1 TO RED, AND GREEN TO GROUND
*GAS VALVE AGS	LGV & N1D (IF 24 VDC) GAS & N1 (IF 120 VAC)	-/G/+ (IF 24 VDC) L/G/N (IF 120 VAC)	24 VDC OR 120 VAC	< 1.0 AMPS	IF 24 VDC - 2 WIRES & GROUND, LGV TO (+), N1D TO (-), AND GREEN TO GROUND IF 120 VAC - 2 WIRES & GROUND, GAS TO (L), N1 TO (N), AND GREEN TO GROUND

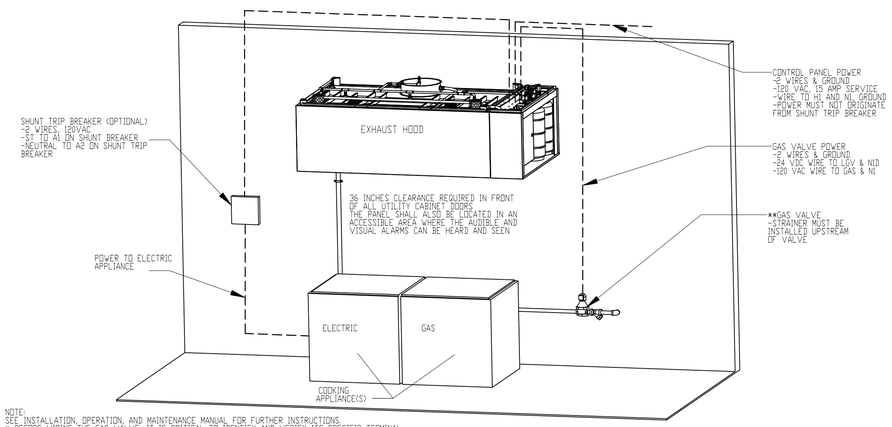

NOTE:
SEE INSTALLATION, OPERATION, AND MAINTENANCE MANUAL FOR FURTHER INSTRUCTIONS.
* BEFORE WIRING THE GAS VALVE, IT IS CRITICAL TO IDENTIFY AND VERIFY ITS SPECIFIC TERMINAL LABELS. DIFFERENT SERIES AND MANUFACTURERS USE VARYING NOMENCLATURE.
** AGS GAS VALVES 3/4" THROUGH 2" DIAMETERS DO NOT REQUIRE UPSTREAM STRAINERS AS THE STRAINER IS BUILT INTO THE GAS VALVE.

ATTENTION: LOW-VOLTAGE DC OR SIGNALING WIRE SHOULD BE ROUTED IN SEPARATE CONDUIT FROM ALL AC SOURCES

REVISIONS

DESCRIPTION	DATE:

CAPTIVEAIRE
www.captiveaire.com
Detroit Mechanical
38255 West Ten Mile Road, Farmington Hills, MI, 48335 PHONE: (248) 658 - 0509 FAX: 9195168735 EMAIL: reg123@captiveaire.com

Harbor Beach Home Ec R2
402 South 5th Street,
Harbor Beach, MI, 48441

DATE: 8/3/2026

DWG.#: 8615075

DRAWN BY: alex.donner

SCALE: 3/4" = 1'-0"

MASTER DRAWING

SHEET NO. 20

JOB NO	MODEL NUMBER	DRAWN BY	SCHEMATIC TYPE	DESCRIPTION OF OPERATION:
8615075	SC-341110MA		INSTALL	Fire System #2 TANK FS - 40/40. Tank-based Fire Protection System equipped with Electronic Detection utilizing CORE board as a Listed Release Mechanism. Installed in Hood Utility Cabinet separate from preaire. Includes 12" box housing circuit board, batteries, and terminals for connection to main control panel.
	JOB NAME: Harbor Beach Home Ec R2	DATE: 8/3/2026	DWG NO: ECP #1-7	

TANK PROTECTION LOW-VOLTAGE DETAIL

10/01/2023 Rev. 3

FS-2: SLAVE

ALARM CONTRACTOR:
1 WIRE MANUAL ACTUATION DEVICE(S), *REMOTE FIRESTAT(S), CORE INTERLOCK(S), FIRE SENSOR(S) AND FIRE ALARM CONTACTS
2 COMPLETE FINAL HOOKUP OF SYSTEM
3 VERIFY FINAL FIRE SYSTEM TEST
*REMOTE FIRESTAT(S) MAYBE BE REQUIRED DEPENDING ON THE DUCT LAYOUT AND HOOD TEMPERATURE RATING. REFERENCE MANUAL FOR LOCATION AND GUIDELINES.

ALARM CONTRACTOR REQUIREMENT

ITEM	CONNECTION IN PANEL	CONNECTION ON DEVICE	VOLTAGE	AMPERAGE	COMMENTS
MANUAL ACTUATION DEVICE(S)	101 AND 104 102 AND 103	1 & 2	24 VDC	< 1.0 AMPS	WIRE MANUAL ACTUATION DEVICE TERMINAL 1 BETWEEN CORE PANEL TERMINALS 102 AND 103 WIRE MANUAL ACTUATION DEVICE TERMINAL 2 BETWEEN CORE PANEL TERMINALS 101 AND 104 JUMPER 101 TO 104 AND 102 TO 103 IF NO MANUAL ACTUATION DEVICE IS INSTALLED
MANUAL ACTUATION DEVICE COVER	N/A	N/A	N/A	N/A	MANUAL ACTUATION DEVICE COVER MUST BE INSTALLED IF SURFACE MOUNTED, USE COVER EXTENSION STI-6531B
REMOTE FIRESTAT SENSOR(S)	21 AND 24 22 AND 23	BLACK AND WHITE	24 VDC	< 1.0 AMPS	WIRE FIRE SENSOR WHITE WIRES BETWEEN HOOD CORE PANEL TERMINALS 22 AND 23 WIRE FIRE SENSOR BLACK WIRE BETWEEN HOOD CORE PANEL TERMINALS 21 AND 24 HIGH TEMP (842°F) #4416010L6FE9 (WHT) & #4416010L6FE0 (BLK)WIRE ONLY IF RAN OF HOOD; OTHERWISE BELDEN #6320UL OR SIMILAR PLENUM RATED WIRE; SEE FIGURE 1
FIRE ALARM CONTACT	AL1, AL2	VARIES	50V MAX (AC/DC)	UP TO 1 AMP	FIRE ALARM RELAY CONTACTS FOR BUILDING FIRE ALARM LOCATED IN THE CORE ELECTRICAL CONTROL PANEL
CORE INTERLOCK(S)	CA, CB, CC	CA, CB, CC	RS-485 COMMUNICATIONS SIGNAL		CORE SYSTEM (1) CA, TO CORE SYSTEM (2) CA. CORE SYSTEM (1) CB, TO CORE SYSTEM (2) CB. CORE SYSTEM (1) CC, TO CORE SYSTEM (2) CC. USE BELDEN# 88760 OR SIMILAR WIRE
TROUBLE CONTACT	TBC, TBL, TOK	VARIES	MAX 120 VAC	UP TO 6 AMPS	WIRE TO TBL & TBC NORMALLY OPEN CONTACT, CLOSES IN TROUBLE CONDITION
CORE COMMUNICATIONS CABLE	RJ-45 Jack	INTERNET CONNECTION	SIGNAL	<1.0 AMPS	TYPICAL CONNECTION CAT5 CABLE TO LOCAL AREA NETWORK VIA ETHERNET SWITCH OR WIRELESS ROUTER WITH VALID INTERNET CONNECTION

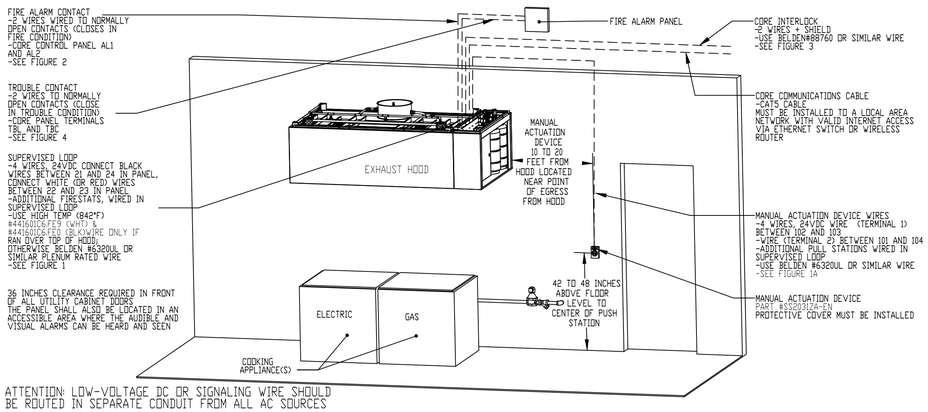

ATTENTION: LOW-VOLTAGE DC OR SIGNALING WIRE SHOULD BE ROUTED IN SEPARATE CONDUIT FROM ALL AC SOURCES

NOTE: SEE INSTALLATION, OPERATION, AND MAINTENANCE MANUAL FOR FURTHER INSTRUCTIONS

JOB NO	MODEL NUMBER	DRAWN BY	SCHEMATIC TYPE	DESCRIPTION OF OPERATION:
8615075	SC-341110MA		INSTALL	Fire System #2 TANK FS - 40/40. Tank-based Fire Protection System equipped with Electronic Detection utilizing CORE board as a Listed Release Mechanism. Installed in Hood Utility Cabinet separate from preaire. Includes 12" box housing circuit board, batteries, and terminals for connection to main control panel.
	JOB NAME: Harbor Beach Home Ec R2	DATE: 8/3/2026	DWG NO: ECP #1-8	

TANK PROTECTION LOW-VOLTAGE FIGURES

10/01/2023 Rev. 17

FS-2: SLAVE

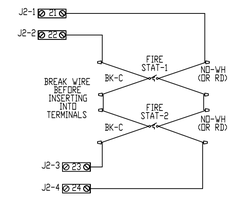

WIRING CONNECTIONS FOR FIRESTAT LOOP FIGURE 1

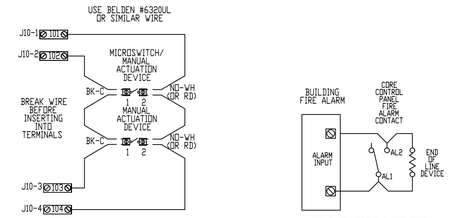

WIRING CONNECTIONS FOR MANUAL ACTUATION LOOP FIGURE 1A

WIRING CONNECTIONS FOR FIRE ALARM CONTACT FIGURE 2

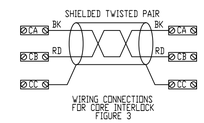

WIRING CONNECTIONS FOR CORE INTERLOCK FIGURE 3

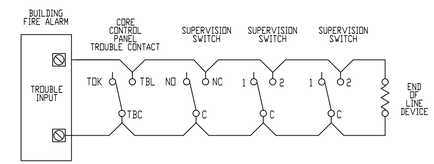

WIRING CONNECTIONS FOR TROUBLE CONTACT FIGURE 4

ATTENTION: LOW-VOLTAGE DC OR SIGNALING WIRE SHOULD BE ROUTED IN SEPARATE CONDUIT FROM ALL AC SOURCES

NOTE: SEE INSTALLATION, OPERATION, AND MAINTENANCE MANUAL FOR FURTHER INSTRUCTIONS

REVISIONS

DESCRIPTION	DATE:

CAPTIVEAIRE
www.captiveaire.com
Detroit Mechanical
38255 West Ten Mile Road, Farmington Hills, MI, 48335 PHONE: (248) 658 - 0509 FAX: 9195168735 EMAIL: reg123@captiveaire.com

Harbor Beach Home Ec R2
402 South 5th Street,
Harbor Beach, MI, 48441

DATE: 8/3/2026

DWG.#: 8615075

DRAWN BY: alex.donner

SCALE: 3/4" = 1'-0"

MASTER DRAWING

SHEET NO. 21

UNLESS SPECIFIED OTHERWISE, ALL FACTORY AC WIRING 16 AWG. ALL FACTORY DC WIRING 18 AWG.

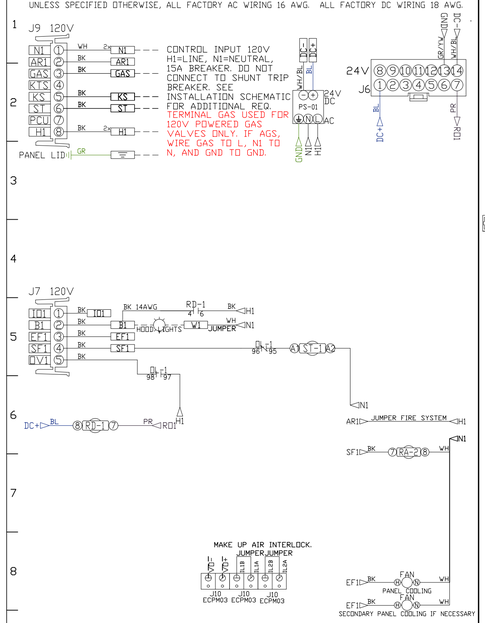

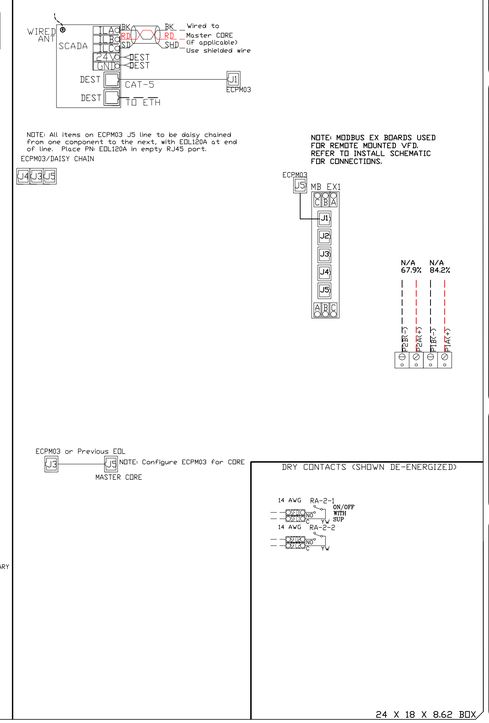

24 X 18 X 8.62 BOX

FACTORY WIRING SCHEMATIC CIRCUIT BOARDS

RA-x 120 VAC RELAY		RD-x 24 VDC RELAY	
NO	4 3	NO	4 3
NC	2 1	NC	2 1
COIL	8 7	COIL	8 7
COM	6 5	COM	6 5

COMPONENT LIST

LABEL	DESCRIPTION
ST-x	Starter varies
OL-X	Overload varies
C-X	Contactor varies
PS-1	Power Sup. 24VDC MDR-60-24-U
RA-x	120V Relay DPDT 341100843
RD-x	24VDC Light Relay 341100863
TS-x	Duct Thermostat A/CF-FD-T4-EXPL
MB EX1	Modbus Expansion MODBUS-EX
SCADA	SCADA Module

LEGEND

FIELD WIRING
FACTORY WIRING

BK- BLACK YW- YELLOW
BL- BLUE GY- GREY
BR- BROWN PR- PURPLE
OR- ORANGE RD- RED
WH- WHITE GR- GREEN
OR/BL- OR/BL STRIPE
BL/RD- BL/RD STRIPE
RD/GN- RD/GN STRIPE
WH/BL- WH/BL STRIPE

JOB NAME: Harbor Beach Hon...
DRAWING TITLE: SC-341110MA
DESCRIPTION OF OPERATION: 3 Phase w/ control for 4 Exhaust fans 1 Supply fan. Fan(s) On in Fire, Lights out in Fire, Relay On/OFF with Supply fan. Fan(s) On/Off Thermostatically Controlled. Room temperature sensor shipped loose for field installation. INVERTER RUTY 3 PHASE MOTOR REQUIRED FOR USE WITH VFD.

JOB NO	DRAWN BY
8615075	
TYPE	DATE
FACTORY	8/3/2026

DWG NO ECP #1-9

MOTOR POWER CIRCUITS. SEE INSTALLATION DIAGRAM FOR FIELD WIRING REQUIREMENTS.

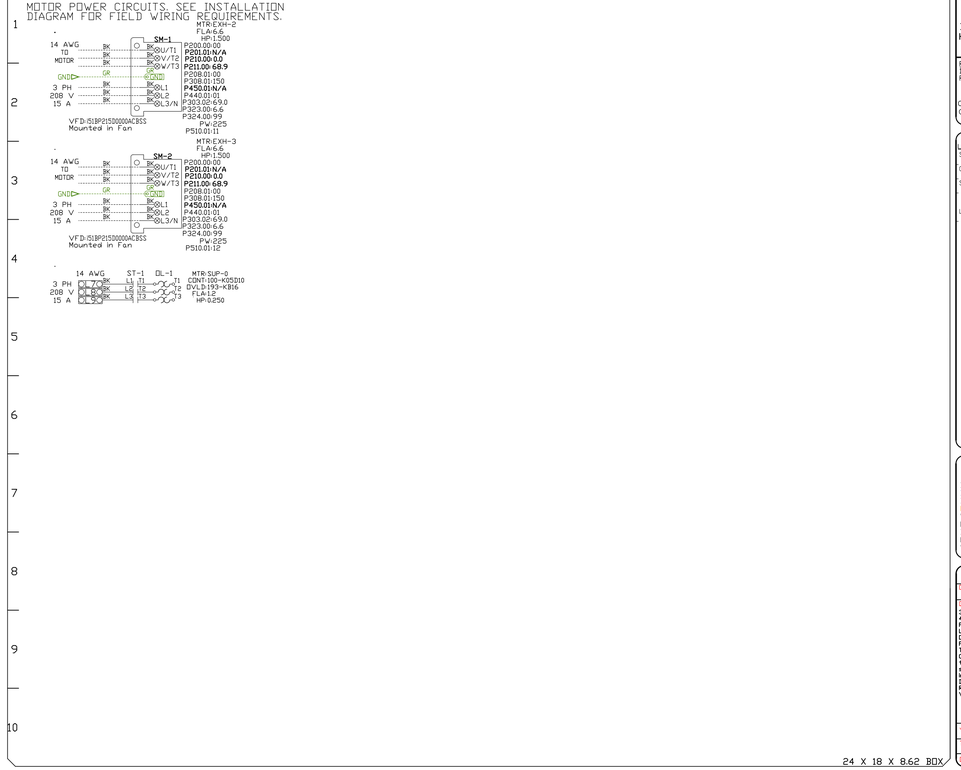

24 X 18 X 8.62 BOX

FACTORY WIRING SCHEMATIC CIRCUIT BOARDS DCV Rev. 2.10.00 HMI Rev. 2.10.00

RA-x 120 VAC RELAY		RD-x 24 VDC RELAY	
NO	4 3	NO	4 3
NC	2 1	NC	2 1
COIL	8 7	COIL	8 7
COM	6 5	COM	6 5

COMPONENT LIST

LABEL	DESCRIPTION
ST-x	Starter varies
C-X	Contactor varies
SM-X	VFD varies
LR-X	Line/Load Reactor varies

LEGEND

FIELD WIRING
FACTORY WIRING

BK- BLACK YW- YELLOW
BL- BLUE GY- GREY
BR- BROWN PR- PURPLE
OR- ORANGE RD- RED
WH- WHITE GR- GREEN
OR/BL- OR/BL STRIPE
BL/RD- BL/RD STRIPE
RD/GN- RD/GN STRIPE
WH/BL- WH/BL STRIPE

JOB NAME: Harbor Beach Hon...
DRAWING TITLE: SC-341110MA
DESCRIPTION OF OPERATION: 3 Phase w/ control for 4 Exhaust fans 1 Supply fan. Fan(s) On in Fire, Lights out in Fire, Relay On/OFF with Supply fan. Fan(s) On/Off Thermostatically Controlled. Room temperature sensor shipped loose for field installation. INVERTER RUTY 3 PHASE MOTOR REQUIRED FOR USE WITH VFD.

JOB NO	DRAWN BY
8615075	
TYPE	DATE
FACTORY	8/3/2026

DWG NO ECP #1-10

REVISIONS

DESCRIPTION	DATE:

CAPTIVEAIRE
www.captiveaire.com
Detroit Mechanical
38255 West Ten Mile Road, Farmington Hills, MI, 48335 PHONE: (248) 658 - 0509 FAX: 9195168735 EMAIL: reg123@captiveaire.com

Harbor Beach Home Ec R2
402 South 5th Street,
Harbor Beach, MI, 48441

DATE: 8/3/2026

DWG.#: 8615075

DRAWN BY: alex.donner

SCALE: 3/4" = 1'-0"

MASTER DRAWING

SHEET NO. 22

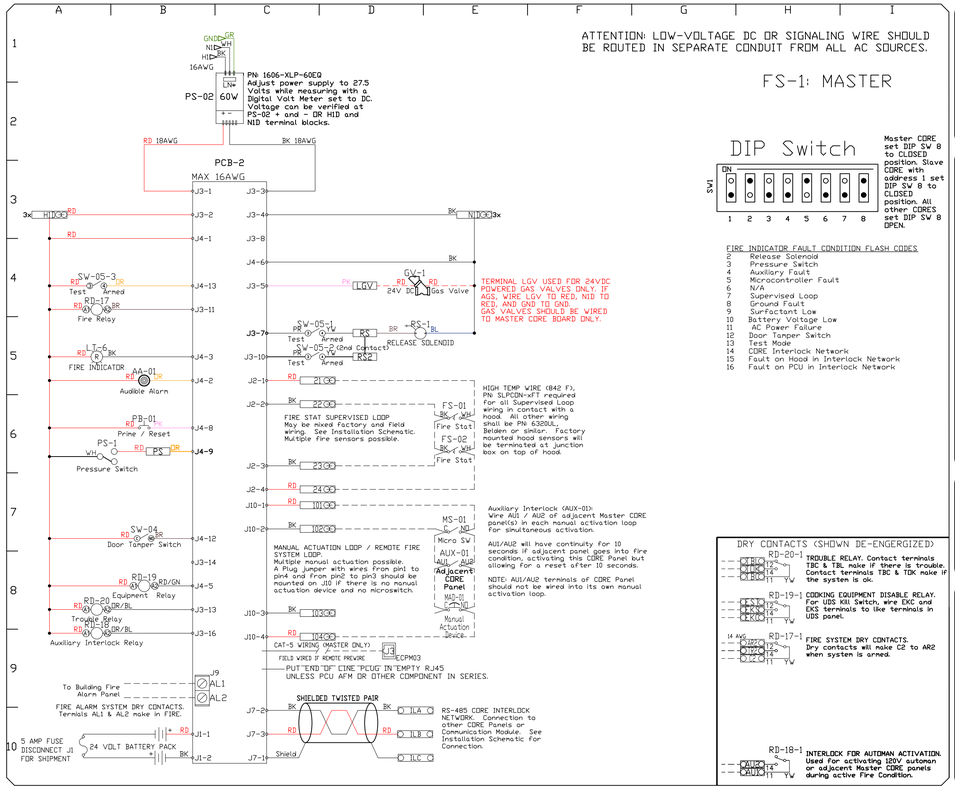

FACTORY WIRING SCHEMATIC CORE FIRE PROTECTION

RA-x 120 VAC RELAY		RD-x 24 VDC RELAY	
NO	4 3	NO	4 3
NC	2 1	NC	2 1
COIL	8 7	COIL	8 7
COM	6 5	COM	6 5

COMPONENT LIST

LABEL	DESCRIPTION
MAD-01	MANUAL ACTIVATION DEVICE
PCB-2	CORE PCB PCBCORE-APP
PS-02	CORE POWER SUPPLY 1606-XLP-60E
WS-x	Water Solenoid varies
LT-06	24V Red Ind Light WL-12VDD-28V
LL-01	Surf. Level Sensor AQ200
AA-01	Audible Alarm SCI25LABPTB
PB-XX	Prime/Reset Switch 1594BA7/594BZ005
SV-05	TEST/ARM Switch 1859AB
SV-04	Tamper Switch EC-2902-A2
SP-1	Surfactant Pump 5000-805
GV-1	24v DC Gas Valve varies
FS-XX	Duct Fire Sensor IE-FIRE01-000360
LT-05	24V YLW Ind Light WL-12VDD-28V
PS-01	Remote Pull/Push Station STI-SS2430
PWS-01	24VDC Power Supply 24VDC 18W POWER
RD-XX	24VDC Phoenix Relay PLC-RPT-24DC/21
PS	Pressure Switch EVC-PRESSURE

LEGEND

FIELD WIRING		FACTORY WIRING	
BK- BLACK	YW- YELLOW		
BL- BLUE	GY- GREY		
BR- BROWN	PR- PURPLE		
OR- ORANGE	RD- RED		
WH- WHITE	GR- GREEN		
		DR/BL- DR/BL STRIPE	
		BL/RD- BL/RD STRIPE	
		RD/GN- RD/GN STRIPE	
		WH/BL- WH/BL STRIPE	

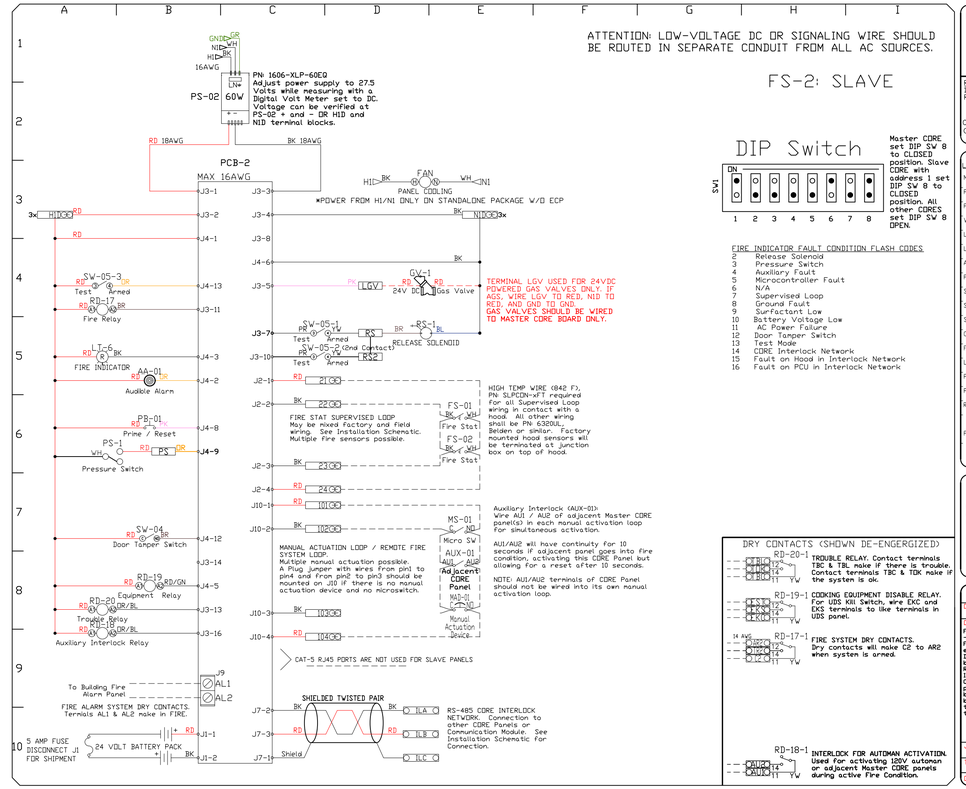

FACTORY WIRING SCHEMATIC CORE FIRE PROTECTION

RA-x 120 VAC RELAY		RD-x 24 VDC RELAY	
NO	4 3	NO	4 3
NC	2 1	NC	2 1
COIL	8 7	COIL	8 7
COM	6 5	COM	6 5

COMPONENT LIST

LABEL	DESCRIPTION
MAD-01	MANUAL ACTIVATION DEVICE
PCB-2	CORE PCB PCBCORE-APP
PS-02	CORE POWER SUPPLY 1606-XLP-60E
WS-x	Water Solenoid varies
LT-06	24V Red Ind Light WL-12VDD-28V
LL-01	Surf. Level Sensor AQ200
AA-01	Audible Alarm SCI25LABPTB
PB-XX	Prime/Reset Switch 1594BA7/594BZ005
SV-05	TEST/ARM Switch 1859AB
SV-04	Tamper Switch EC-2902-A2
SP-1	Surfactant Pump 5000-805
GV-1	24v DC Gas Valve varies
FS-XX	Duct Fire Sensor IE-FIRE01-000360
LT-05	24V YLW Ind Light WL-12VDD-28V
PS-01	Remote Pull/Push Station STI-SS2430
PWS-01	24VDC Power Supply 24VDC 18W POWER
RD-XX	24VDC Phoenix Relay PLC-RPT-24DC/21
PS	Pressure Switch EVC-PRESSURE

LEGEND

FIELD WIRING		FACTORY WIRING	
BK- BLACK	YW- YELLOW		
BL- BLUE	GY- GREY		
BR- BROWN	PR- PURPLE		
OR- ORANGE	RD- RED		
WH- WHITE	GR- GREEN		
		DR/BL- DR/BL STRIPE	
		BL/RD- BL/RD STRIPE	
		RD/GN- RD/GN STRIPE	
		WH/BL- WH/BL STRIPE	

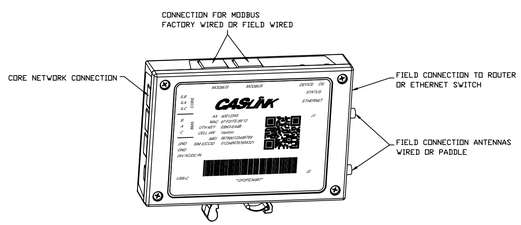

CASlink Monitor and Control

- *Hood control panel to support communications to cloud-based Building Management System.*
- *Hood Control Panel to allow cloud-based Building Management System to monitor real time parameters outlined as MONITOR in the points list.*
- *Hood Control Panel to allow cloud-based Building Management System to control parameters outlined as CONTROL in the points list.*
- *Hood Control Panel to allow cloud-based Building Management System to implement SYSTEM ECONOMIZER control strategies for fully integrated Building Management.*

MONITORING AND CONTROL POINTS LIST

DCV Packages	*Function*
Room Temperature	*MONITOR*
Duct Temperature(s)	*MONITOR*
MUA Discharge Temperature	*MONITOR*
Kitchen RTU Discharge Temperature	*MONITOR*
Fan Speed	*MONITOR*
Fan Amperage	*MONITOR*
Fan Power	*MONITOR*
VFD Faults	*MONITOR*
Controller Faults	*MONITOR*
Fan Faults	*MONITOR*
Fan Status	*MONITOR*
PCU Faults	*MONITOR*
PCU Filter Clog Percentages	*MONITOR*
Fire Condition	*MONITOR*
CORE Fire System	*MONITOR*
Building Pressures	*MONITOR*
Prep Time Button	*MONITOR & CONTROL*
Fans Button	*MONITOR & CONTROL*
Lights Button	*MONITOR & CONTROL*
Wash Button	*MONITOR & CONTROL*

SC Packages	*Function*
Room Temperature(s)	*MONITOR*
Duct Temperature(s)	*MONITOR*
MUA Discharge Temperature	*MONITOR*
Kitchen RTU Discharge Temperature	*MONITOR*
Controller Faults	*MONITOR*
Fan Faults	*MONITOR*
Fan Status	*MONITOR*
PCU Faults	*MONITOR*
PCU Filter Clog Percentages	*MONITOR*
Fire Condition	*MONITOR*
CORE Fire System	*MONITOR*
Building Pressures	*MONITOR*
Fans Button(s)	*MONITOR & CONTROL*
Lights Button(s)	*MONITOR & CONTROL*
Wash Button	*MONITOR & CONTROL*

REVISIONS

DESCRIPTION	DATE:

CAPTIVEAIRE
www.captiveaire.com
Detroit Mechanical
38255 West Ten Mile Road, Farmington Hills, MI, 48335 PHONE: (248) 658 - 0509 FAX: 9195168735 EMAIL: reg123@captiveaire.com

Harbor Beach Home Ec R2
402 South 5th Street,
Harbor Beach, MI, 48441

DATE: 8/3/2026

DWG.#: 8615075

DRAWN BY: alex.donner

SCALE: 3/4" = 1'-0"

MASTER DRAWING

SHEET NO. 23

DUCTWORK #1 PARTS – JOB#8615075 DOUBLE WALL HOOD 1

TAG	PART #	CFM	GPM	ZONE	COVEREDBY	SP	WEIGHT	VELOCITY	QTY	DESCRIPTION
H1-E1	DW16DWRISER-2R-S	1300				-0.8400	7.31		1	DOUBLE WALL RISER COVER - USED ON 12" INNER RISER, 4' LONG - 2 LAYERS REDUCED CLEARANCE - 16" STAINLESS STEEL OUTER RISER SHELL ASSEMBLY. INCLUDES INSULATION & SINGLE V CLAMPS FOR INNER & OUTER CONNECTIONS.
P1 ASSEMBLED W/P17	DW12DWTEASY-2R-S	1300		1		-0.1255	34.13	1655	1	DOUBLE WALL DUCT - 12" INNER TEE DUCT - 2 LAYERS REDUCED CLEARANCE - 16" STAINLESS STEEL OUTER SHELL.
P2	DW1201DWOFFSETASY-2R-S	1300				-0.0038	11.20	1655	1	DOUBLE WALL DUCT - 12" INNER DUCT RISER & 1 DEGREE OFFSET - 2 LAYERS REDUCED CLEARANCE - 16" STAINLESS STEEL OUTER SHELL.
P3	DW1207DWLT-2R-S	1300				-0.0033	9.92	1655	1	DOUBLE WALL DUCT - 12" INNER DUCT, 7' LONG - 2 LAYERS REDUCED CLEARANCE - 16" STAINLESS STEEL OUTER SHELL. STANDARD PART.
P4 ASSEMBLED W/P16	DW12DW45TEASY-2R-S	1300				-0.0905	66.83	1655	1	DOUBLE WALL DUCT - 12" INNER 45 TEE DUCT - 2 LAYERS REDUCED CLEARANCE - 16" STAINLESS STEEL OUTER SHELL.
P5	DW1227DWAJD-2R-S	1300				-0.0106	45.95	1655	1	DOUBLE WALL ADJUSTABLE DUCT - 12" INNER DUCT - 2 LAYERS REDUCED CLEARANCE - 16" STAINLESS STEEL OUTER SHELL. MIN LENGTH = 11' / MAX LENGTH = 24.5' / ADJUSTMENT = 13.5' / ADJUSTABLE SECTION MAY NEED TO BE CUT. INCLUDES SINGLE AND DOUBLE WALL "V" CLAMPS.
P6	DW1247DWLT-2R-S	1300				-0.0223	54.71	1655	1	DOUBLE WALL DUCT - 12" INNER DUCT, 47' LONG - 2 LAYERS REDUCED CLEARANCE - 16" STAINLESS STEEL OUTER SHELL.
P7	DW1620SADKIT						6.53		1	DUCT - HORIZONTAL SADDLE SUPPORT KIT, USED WITH 16" OD - INCLUDES UNI-STRUT CUT TO LENGTH, DW1620SAD, & HARDWARE BAG 4.
P8	DW1247DWLT-2R-S	1300				-0.0223	54.71	1655	1	DOUBLE WALL DUCT - 12" INNER DUCT, 47' LONG - 2 LAYERS REDUCED CLEARANCE - 16" STAINLESS STEEL OUTER SHELL.
P9	DW1620SADKIT						6.53		1	DUCT - HORIZONTAL SADDLE SUPPORT KIT, USED WITH 16" OD - INCLUDES UNI-STRUT CUT TO LENGTH, DW1620SAD, & HARDWARE BAG 4.
P10 ASSEMBLED W/P11	DW12DWTEASY-2R-S	1300		1		-0.0717	34.13	1655	1	DOUBLE WALL DUCT - 12" INNER TEE DUCT - 2 LAYERS REDUCED CLEARANCE - 16" STAINLESS STEEL OUTER SHELL.
P11 ASSEMBLED W/P10 □=S	DW12DWACCDOORCOV-2R-S						18.57		1	DOUBLE WALL DUCT - 12" INNER ACCESS DOOR & 16" ACCESS DOOR COVER WITH CLAMPS - 2 LAYERS REDUCED CLEARANCE - 16" STAINLESS STEEL OUTER SHELL.
P12	DW1201DWOFFSETASY-2R-S	1300				-0.0038	11.20	1655	1	DOUBLE WALL DUCT - 12" INNER DUCT RISER & 1 DEGREE OFFSET - 2 LAYERS REDUCED CLEARANCE - 16" STAINLESS STEEL OUTER SHELL.
P13	DW1247DWAJD-2R-S	1300				-0.0183	83.19	1655	1	DOUBLE WALL ADJUSTABLE DUCT - 12" INNER DUCT - 2 LAYERS REDUCED CLEARANCE - 16" STAINLESS STEEL OUTER SHELL. MIN LENGTH = 11' / MAX LENGTH = 48.5' / ADJUSTMENT = 30.5' / ADJUSTABLE SECTION MAY NEED TO BE CUT. INCLUDES SINGLE AND DOUBLE WALL "V" CLAMPS.
P14 ASSEMBLED W/P15	DW1235DWLTTP-2R-S	1300				-0.0166	42.19	1655	1	DOUBLE WALL DUCT - 12" INNER DUCT, 35' LONG - 2 LAYERS REDUCED CLEARANCE - 16" STAINLESS STEEL OUTER SHELL - USED WITH TRANSITION PLATE.
P15 ASSEMBLED W/P14 □=B	DW2312TPDBEX	1300					8.00	1655	1	DUCT TO CURB TRANSITION 3/4" DOWN TURN, 23" CURB TO 12" DUCT, 16 GA ALUMINIZED. USED ON NCA14FA & NCA14HPFA. TRANSITION PLATE OD IS 23.5" DESIGNED FOR USE WITH EXHAUST FAN.
SYSTEM AT P15						-1.2287	0.00			
P16 ASSEMBLED W/P4	DW12DWACCDOORCOV-2R-S						18.57		1	DOUBLE WALL DUCT - 12" INNER ACCESS DOOR & 16" ACCESS DOOR COVER WITH CLAMPS - 2 LAYERS REDUCED CLEARANCE - 16" STAINLESS STEEL OUTER SHELL.
P17 ASSEMBLED W/P1 □=S	DW12DWACCDOORCOV-2R-S						18.57		1	DOUBLE WALL DUCT - 12" INNER ACCESS DOOR & 16" ACCESS DOOR COVER WITH CLAMPS - 2 LAYERS REDUCED CLEARANCE - 16" STAINLESS STEEL OUTER SHELL.
RC1	DW16DWRISER-2R-S						7.31		1	DOUBLE WALL RISER COVER - USED ON 12" INNER RISER, 4' LONG - 2 LAYERS REDUCED CLEARANCE - 16" STAINLESS STEEL OUTER RISER SHELL ASSEMBLY. INCLUDES INSULATION & SINGLE V CLAMPS FOR INNER & OUTER CONNECTIONS.
	3M-2000PLUS						0.80		2	DUCT - 3M FIRE BARRIER 2000 PLUS SILICONE - USED AS SEALANT TO SEAL DUCT JOINTS.
	DW12DWCLASY-2R-S						6.44		6	DUCT - 12" DUCT - 16" DOUBLE "V" CLAMP - 2R INSULATION & SINGLE "V" CLAMP INCLUDED - REDUCED CLEARANCE.
TOTAL WEIGHT							579.79			
TOTAL PRESSURE						-1.0579				

DOUBLE WALL FACTORY BUILT DUCTWORK

- ALL DUCTWORK IS REQUIRED TO BE INSTALLED WITH THE MAXIMUM SUPPORT SPACING LISTED BELOW.
- FOR A COMPLETE LIST OF APPROVED SUPPORT METHODS, SEE THE ENTIRE INSTALLATION AND OPERATION MANUAL
- DUCTWORK SHALL SLOPE NOT LESS THAN 1/16" PER LINEAR FOOT TOWARDS THE HOOD OR AN APPROVED GREASE COLLECTION RESERVOIR.
- WHERE HORIZONTAL DUCTS EXCEED 75 FEET IN LENGTH, THE SLOPE SHALL NOT BE LESS THAN 3/16" PER LINEAR FOOT.
- GREASE DUCT CLEANOUTS MAY BE REQUIRED BY LOCAL CODE, INTERNATIONAL MECHANICAL CODE, AND/OR NFPA 96. PLEASE CONSULT WITH THE ENGINEER OF RECORD TO ENSURE GREASE DUCT CLEANOUTS ARE PROPERLY PLACED AND ACCESSIBLE.
- GREASE DUCT CLEANOUTS NOT ACCESSIBLE BY A 10' STEP LADDER MUST BE PROVIDED WITH A WORK PLATFORM OR OTHER MEANS OF SAFE ACCESS, PROVIDED BY OTHERS.

HORIZONTAL	
DUCT DIAMETER	SUPPORT SPACING (FT)
5"	7'
6"	7'
7"	7'
8"	7'
10"	7'
12"	7'
14"	7'
16"	7'
18"	5'
20"	5'
22"	5'
24"	5'
26"	5'
28"	5'
30"	5'
32"	5'
34"	5'
36"	5'

VERTICAL			
TYPE	WALL SUPPORT (FT)	CURB SUPPORT (FT)	FLOOR SUPPORT (FT)
2R & 2R HT (5"-16")	20'	24'	24'
2R (18")	18'	24'	24'
3R & 3Z (5"-24")	10'	24'	24'
3Z (26" -36")	10'	20'	20'

DO NOT LEAK TEST USING SMOKE BOMBS CONTAINING CHLORINES/CHLORIDES. CONSULT WITH CAPTIVEAIRE FOR PROPER LEAK TESTING METHODS.

REVISIONS

DESCRIPTION	DATE:

CAPTIVEAIRE
www.captiveaire.com
Detroit Mechanical
38255 West Ten Mile Road, Farmington Hills, MI, 48335 PHONE: (248) 858 - 0509 FAX: 9195168735 EMAIL: reg123@captiveaire.com

Harbor Beach Home Ec R2
402 South 5th Street,
Harbor Beach, MI, 48441

DATE: 8/3/2026

DWG.#: 8615075

DRAWN BY: alex.donner

SCALE: 3/4" = 1'-0"

MASTER DRAWING

SHEET NO. 24

SUPPORT SYSTEM DETAILS #1

DW1620SADKIT - HORIZONTAL SUPPORTS

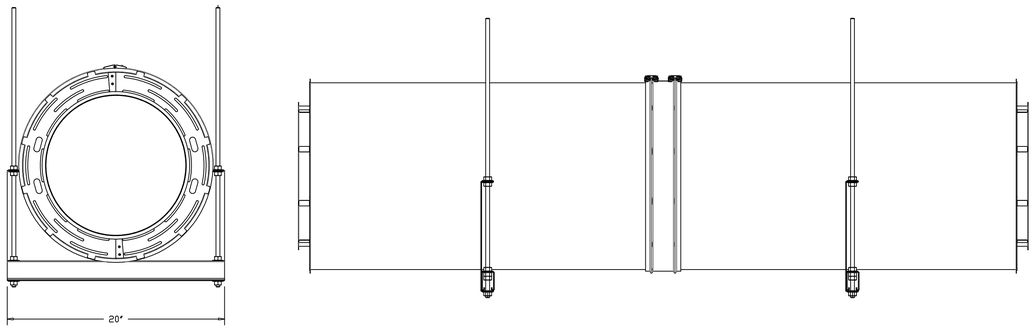

DUCTWORK #1 FRONT VIEW
HOOD 1

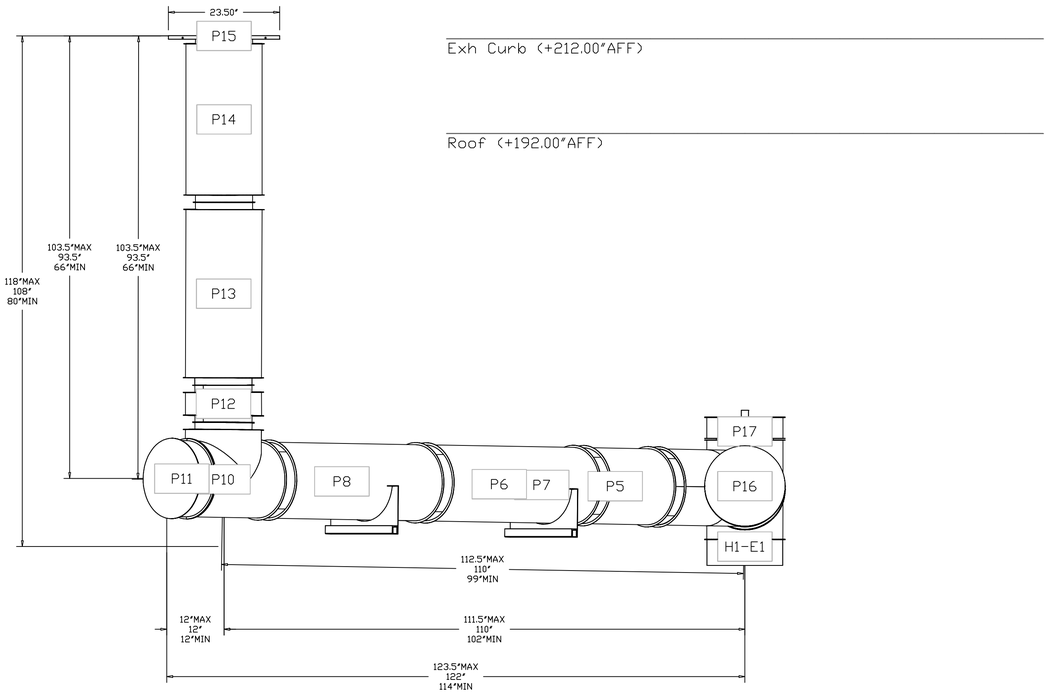

REVISIONS

DESCRIPTION	DATE:

CAPTIVEAIRE
www.captivealre.com
Detroit Mechanical
38255 West Ten Mile Road, Farmington Hills, MI, 48335 PHONE: (248) 858 - 0509 FAX: 9195168735 EMAIL: reg123@captivealre.com

Harbor Beach Home Ec R2
402 South 5th Street,
Harbor Beach, MI, 48441

DATE: 8/3/2026

DWG.#: 8615075

DRAWN BY: alex.donner

SCALE: 3/4" = 1'-0"

MASTER DRAWING

SHEET NO.
25

DUCTWORK #1 SIDE VIEW
HOOD 1

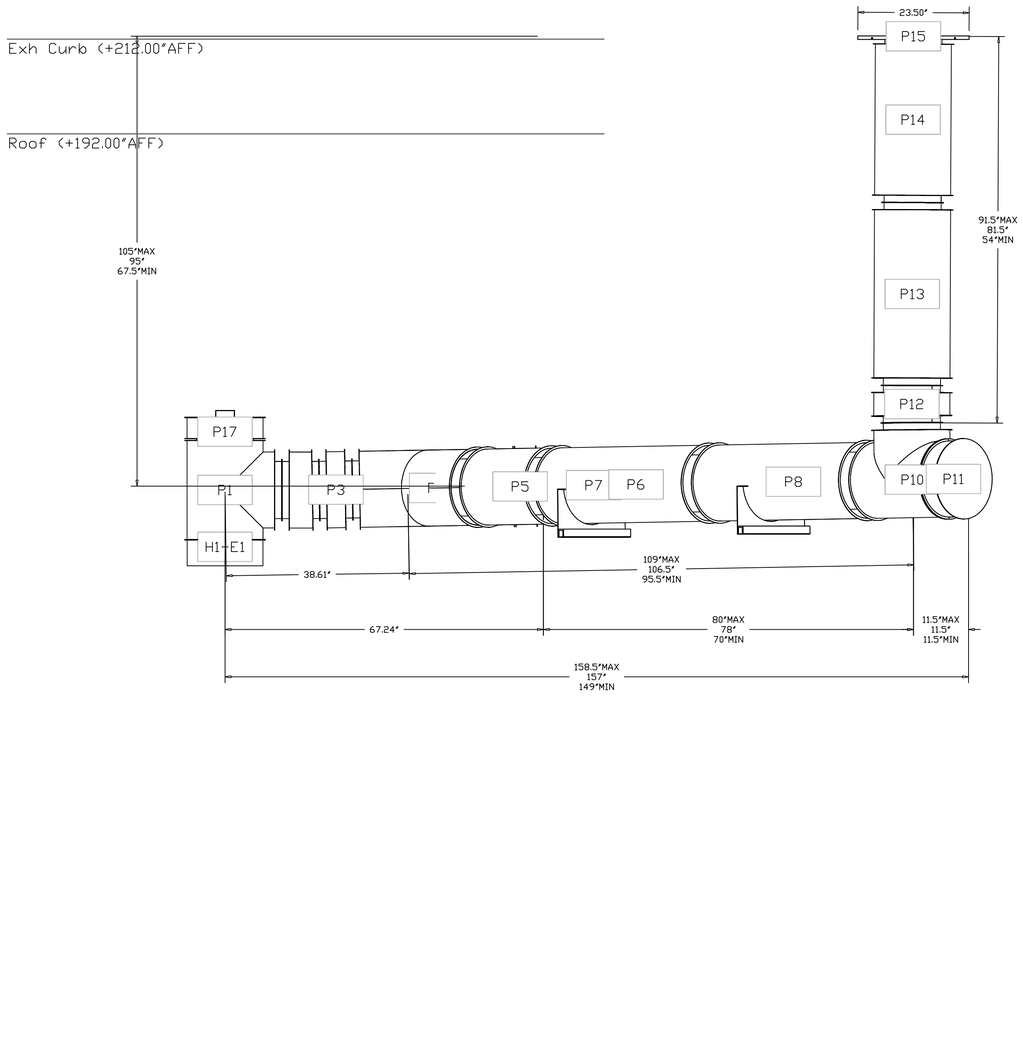

DUCTWORK #1 TOP VIEW
HOOD 1

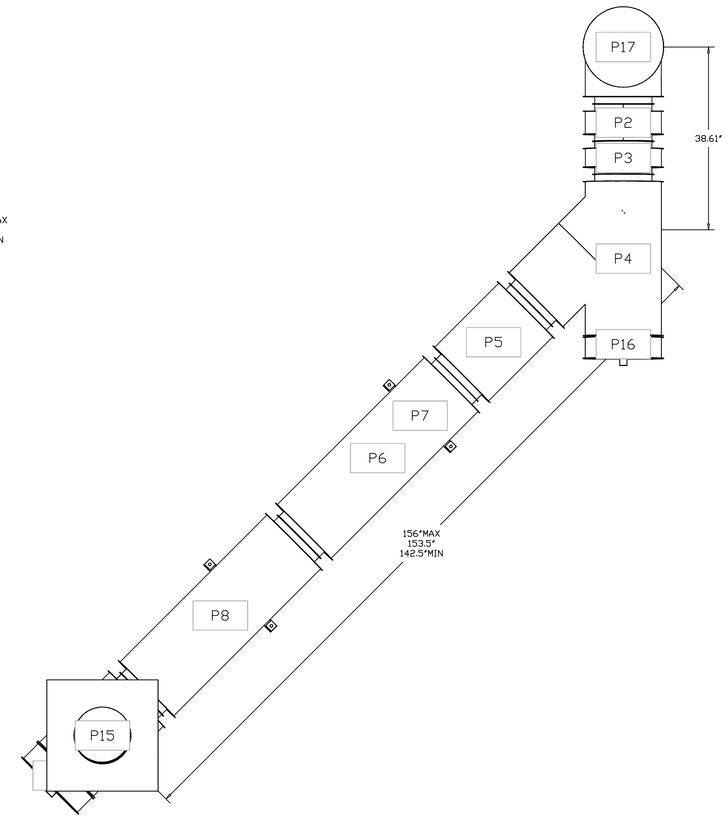

REVISIONS

DESCRIPTION	DATE:

CAPTIVEAIRE
www.captivealre.com
Detroit Mechanical
38255 West Ten Mile Road, Farmington Hills, MI, 48335 PHONE: (248) 858 - 0509 FAX: 9195168735 EMAIL: reg123@captivealre.com

Harbor Beach Home Ec R2
402 South 5th Street,
Harbor Beach, MI, 48441

DATE: 8/3/2026

DWG.#: 8615075

DRAWN BY: alex.donner

SCALE: 3/4" = 1'-0"

MASTER DRAWING

SHEET NO.
26

DUCTWORK #1 SE VIEW
HOOD 1

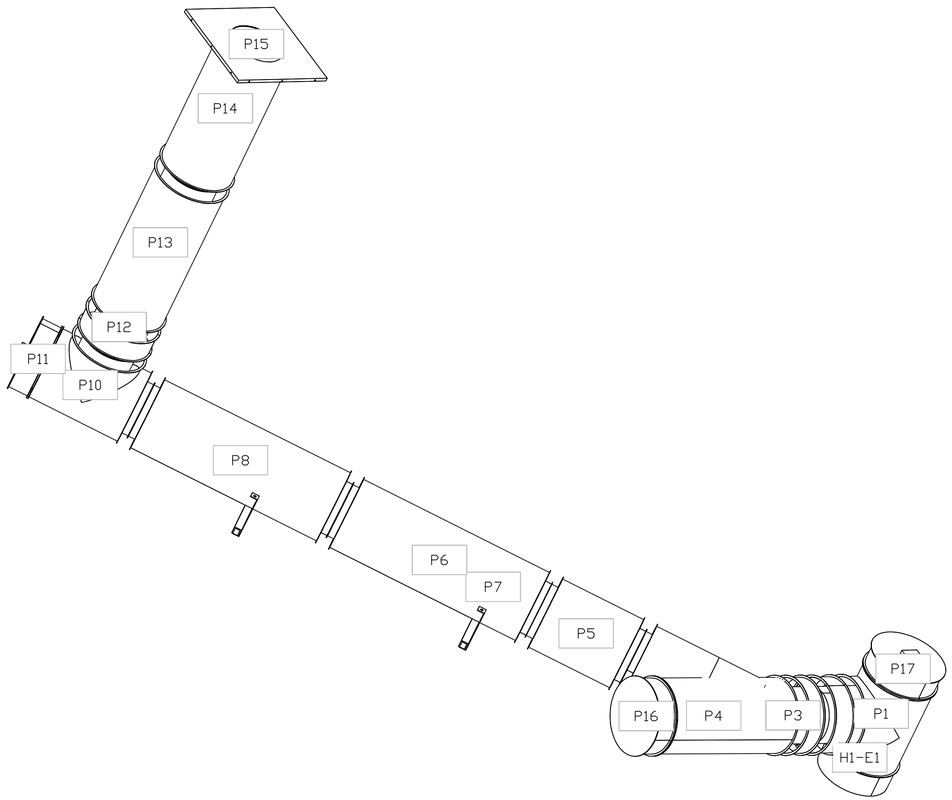

REVISIONS

DESCRIPTION	DATE:

CAPTIVEAIRE
www.captiveaire.com
Detroit Mechanical
38255 West Ten Mile Road, Farmington Hills, MI, 48335 PHONE: (248) 858 - 0509 FAX: 9195168735 EMAIL: reg123@captiveaire.com

Harbor Beach Home Ec R2
402 South 5th Street,
Harbor Beach, MI, 48441

DATE: 8/3/2026

DWG.#: 8615075

DRAWN BY: alex.donner

SCALE: 3/4" = 1'-0"

MASTER DRAWING

SHEET NO.
27

DUCTWORK #2 PARTS – JOB#8615075 DOUBLE WALL HOOD 2

TAG	PART #	CFM	GPM	ZONE	COVEREDBY	SP	WEIGHT	VELOCITY	QTY	DESCRIPTION
H2-E1	DW18DWRISER-2R-S	2000				-0.9560	8.15		1	DOUBLE WALL RISER COVER - USED ON 14" INNER RISER, 4' LONG - 2 LAYERS REDUCED CLEARANCE - 18" STAINLESS STEEL OUTER RISER SHELL ASSEMBLY. INCLUDES INSULATION & SINGLE V CLAMPS FOR INNER & OUTER CONNECTIONS.
P1	DW1445DWASY-2R-S	2000				-0.1298	19.87	1871	1	DOUBLE WALL DUCT - 14" INNER 45 DUCT - 2 LAYERS REDUCED CLEARANCE - 18" STAINLESS STEEL OUTER SHELL.
P2	DW1447DWAJD-2R-S	2000				-0.0164	93.18	1871	1	DOUBLE WALL ADJUSTABLE DUCT - 14" INNER DUCT - 2 LAYERS REDUCED CLEARANCE - 18" STAINLESS STEEL OUTER SHELL. MIN LENGTH = 11' / MAX LENGTH = 48.5' / ADJUSTMENT = 30.5' / ADJUSTABLE SECTION MAY NEED TO BE CUT. INCLUDES SINGLE AND DOUBLE WALL "V" CLAMPS.
P3	DW1822SADKIT						7.25		1	DUCT - HORIZONTAL SADDLE SUPPORT KIT, USED WITH 18" OD - INCLUDES UNI-STRUT CUT TO LENGTH, DW1822SAD, & HARDWARE BAG 4.
P4	DW1445DWASY-2R-S	2000				-0.1113	19.87	1871	1	DOUBLE WALL DUCT - 14" INNER 45 DUCT - 2 LAYERS REDUCED CLEARANCE - 18" STAINLESS STEEL OUTER SHELL.
P5	DW1447DWAJD-2R-S	2000				-0.0117	93.18	1871	1	DOUBLE WALL ADJUSTABLE DUCT - 14" INNER DUCT - 2 LAYERS REDUCED CLEARANCE - 18" STAINLESS STEEL OUTER SHELL. MIN LENGTH = 11' / MAX LENGTH = 48.5' / ADJUSTMENT = 30.5' / ADJUSTABLE SECTION MAY NEED TO BE CUT. INCLUDES SINGLE AND DOUBLE WALL "V" CLAMPS.
P6 ASSEMBLED W/P7	DW1435DWLTTP-2R-S	2000				-0.0182	48.06	1871	1	DOUBLE WALL DUCT - 14" INNER DUCT, 35' LONG - 2 LAYERS REDUCED CLEARANCE - 18" STAINLESS STEEL OUTER SHELL - USED WITH TRANSITION PLATE.
P7 ASSEMBLED W/P6 O=B	DW2614TPDBEX	2000					12.50	1871	1	DUCT TO CURB TRANSITION 3/4" DOWN TURN, 26-1/2" CURB TO 14" DUCT, 16 GA ALUMINIZED. FOR USE WITH EXHAUST FANS.
SYSTEM AT P7						-1.2434	0.00			
RC1	DW18DWRISER-2R-S						8.15		1	DOUBLE WALL RISER COVER - USED ON 14" INNER RISER, 4' LONG - 2 LAYERS REDUCED CLEARANCE - 18" STAINLESS STEEL OUTER RISER SHELL ASSEMBLY. INCLUDES INSULATION & SINGLE V CLAMPS FOR INNER & OUTER CONNECTIONS.
	3M-2000PLUS						0.80		1	DUCT - 3M FIRE BARRIER 2000 PLUS SILICONE - USED AS SEALANT TO SEAL DUCT JOINTS.
TOTAL WEIGHT							311.01			
TOTAL PRESSURE						-1.0252				

DOUBLE WALL FACTORY BUILT DUCTWORK

- ALL DUCTWORK IS REQUIRED TO BE INSTALLED WITH THE MAXIMUM SUPPORT SPACING LISTED BELOW.
- FOR A COMPLETE LIST OF APPROVED SUPPORT METHODS, SEE THE ENTIRE INSTALLATION AND OPERATION MANUAL
- DUCTWORK SHALL SLOPE NOT LESS THAN 1/16" PER LINEAR FOOT TOWARDS THE HOOD OR AN APPROVED GREASE COLLECTION RESERVOIR.
- WHERE HORIZONTAL DUCTS EXCEED 75 FEET IN LENGTH, THE SLOPE SHALL NOT BE LESS THAN 3/16" PER LINEAR FOOT.
- GREASE DUCT CLEANOUTS MAY BE REQUIRED BY LOCAL CODE, INTERNATIONAL MECHANICAL CODE, AND/OR NFPA 96. PLEASE CONSULT WITH THE ENGINEER OF RECORD TO ENSURE GREASE DUCT CLEANOUTS ARE PROPERLY PLACED AND ACCESSIBLE.
- GREASE DUCT CLEANOUTS NOT ACCESSIBLE BY A 10' STEP LADDER MUST BE PROVIDED WITH A WORK PLATFORM OR OTHER MEANS OF SAFE ACCESS, PROVIDED BY OTHERS.

HORIZONTAL	
DUCT DIAMETER	SUPPORT SPACING (FT)
5"	7'
6"	7'
7"	7'
8"	7'
10"	7'
12"	7'
14"	7'
16"	7'
18"	5'
20"	5'
22"	5'
24"	5'
26"	5'
28"	5'
30"	5'
32"	5'
34"	5'
36"	5'

VERTICAL			
TYPE	WALL SUPPORT (FT)	CURB SUPPORT (FT)	FLOOR SUPPORT (FT)
2R & 2R HT (5'-16')	20'	24'	24'
2R (18')	18'	24'	24'
3R & 3Z (5'-24')	10'	24'	24'
3Z (26' -36')	10'	20'	20'

DO NOT LEAK TEST USING SMOKE BOMBS CONTAINING CHLORINES/CHLORIDES. CONSULT WITH CAPTIVEAIRE FOR PROPER LEAK TESTING METHODS.

REVISIONS

DESCRIPTION	DATE:

CAPTIVEAIRE
www.captiveaire.com
Detroit Mechanical
38255 West Ten Mile Road, Farmington Hills, MI, 48335 PHONE: (248) 858 - 0509 FAX: 9195168735 EMAIL: reg123@captiveaire.com

Harbor Beach Home Ec R2
402 South 5th Street,
Harbor Beach, MI, 48441

DATE: 8/3/2026

DWG.#: 8615075

DRAWN BY: alex.donner

SCALE: 3/4" = 1'-0"

MASTER DRAWING

SHEET NO. 28

SUPPORT SYSTEM DETAILS #2

DW1822SADKIT - HORIZONTAL SUPPORTS

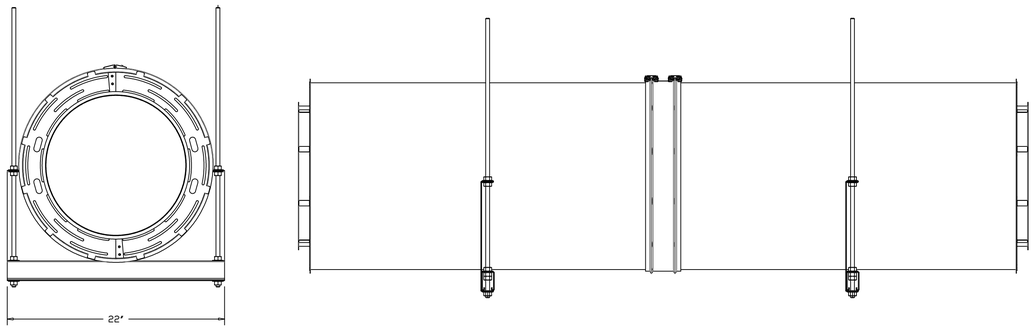

DUCTWORK #2 FRONT VIEW
HOOD 2

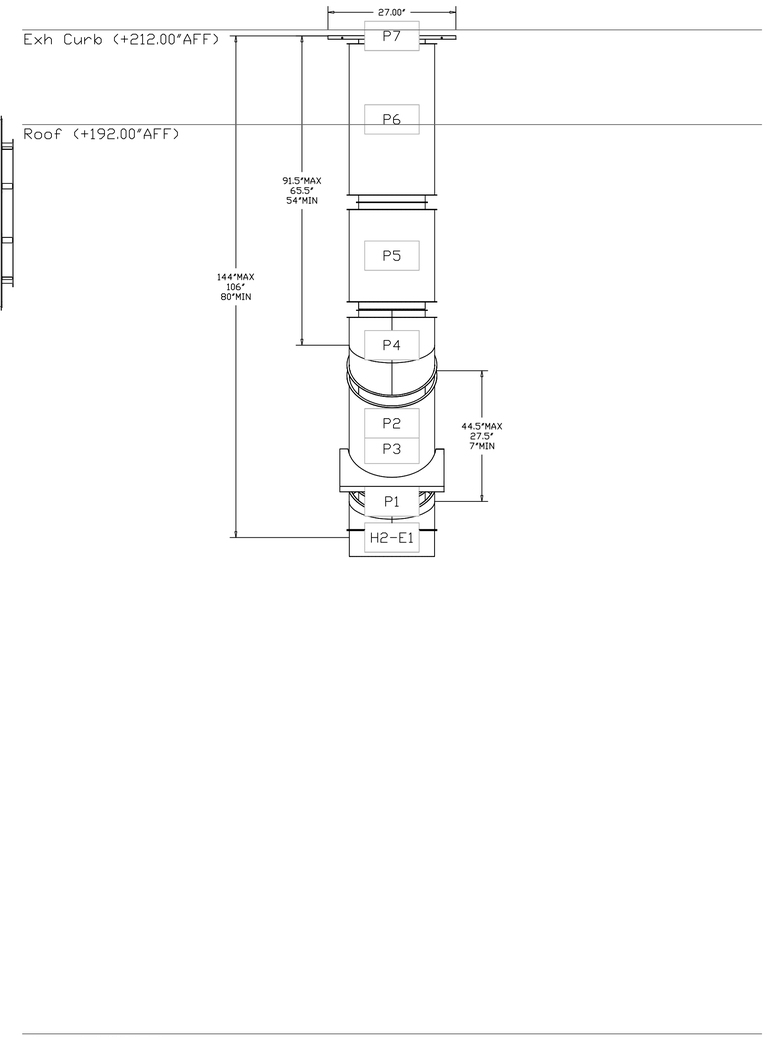

REVISIONS

DESCRIPTION	DATE:

CAPTIVEAIRE
www.captiveaire.com
Detroit Mechanical
38255 West Ten Mile Road, Farmington Hills, MI, 48335 PHONE: (248) 858 - 0509 FAX: 9195168735 EMAIL: reg123@captiveaire.com

Harbor Beach Home Ec R2
402 South 5th Street,
Harbor Beach, MI, 48441

DATE: 8/3/2026

DWG.#: 8615075

DRAWN BY: alex.donner

SCALE: 3/4" = 1'-0"

MASTER DRAWING

SHEET NO.
29

DUCTWORK #2 SIDE VIEW
HOOD 2

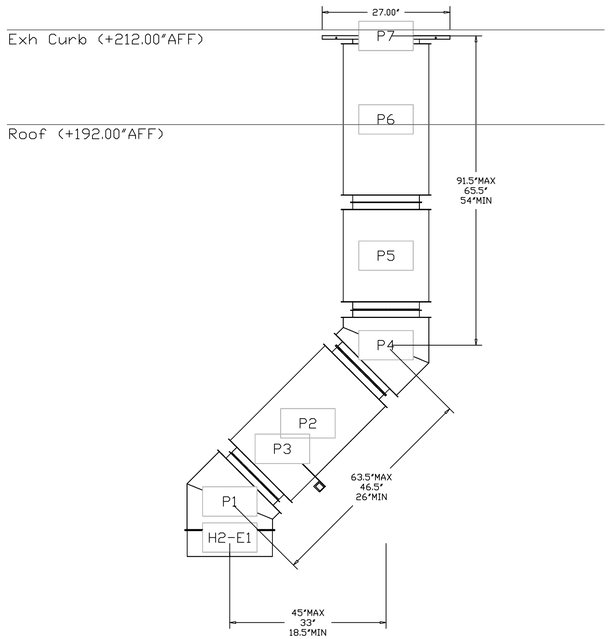

DUCTWORK #2 TOP VIEW
HOOD 2

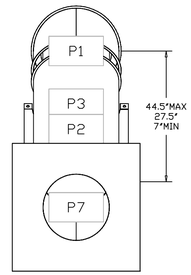

DUCTWORK #2 SE VIEW
HOOD 2

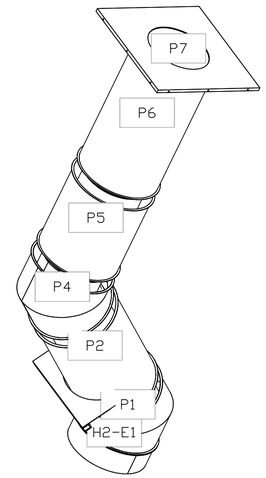

REVISIONS

DESCRIPTION	DATE:

CAPTIVEAIRE
www.captiveaire.com
Detroit Mechanical
38255 West Ten Mile Road, Farmington Hills, MI, 48335 PHONE: (248) 858 - 0509 FAX: 9195168735 EMAIL: reg123@captiveaire.com

Harbor Beach Home Ec R2
402 South 5th Street,
Harbor Beach, MI, 48441

DATE: 8/3/2026

DWG.#: 8615075

DRAWN BY: alex.donner

SCALE: 3/4" = 1'-0"

MASTER DRAWING

SHEET NO.
30

DUCTWORK #3 PARTS – JOB#8615075 DOUBLE WALL HOOD 3

TAG	PART #	CFM	GPM	ZONE	COVEREDBY	SP	WEIGHT	VELOCITY	QTY	DESCRIPTION
H3-E1	DW18DWRISER-2R-S	2000				-0.9560	8.15		1	DOUBLE WALL RISER COVER - USED ON 14" INNER RISER, 4' LONG - 2 LAYERS REDUCED CLEARANCE - 18' STAINLESS STEEL OUTER RISER SHELL ASSEMBLY. INCLUDES INSULATION & SINGLE V CLAMPS FOR INNER & OUTER CONNECTIONS.
P1	DW1445DWASY-2R-S	2000				-0.1298	19.87	1871	1	DOUBLE WALL DUCT - 14" INNER 45 DUCT - 2 LAYERS REDUCED CLEARANCE - 18' STAINLESS STEEL OUTER SHELL.
P2	DW1447DWAJD-2R-S	2000				-0.0164	93.18	1871	1	DOUBLE WALL ADJUSTABLE DUCT - 14" INNER DUCT - 2 LAYERS REDUCED CLEARANCE - 18' STAINLESS STEEL OUTER SHELL. MIN LENGTH = 11' / MAX LENGTH = 48.5' / ADJUSTMENT = 30.5' / ADJUSTABLE SECTION MAY NEED TO BE CUT. INCLUDES SINGLE AND DOUBLE WALL 'V' CLAMPS.
P3	DW1822SADKIT						7.25		1	DUCT - HORIZONTAL SADDLE SUPPORT KIT, USED WITH 18' OD - INCLUDES UNI-STRUT CUT TO LENGTH, DW1822SAD, & HARDWARE BAG 4.
P4	DW1445DWASY-2R-S	2000				-0.1113	19.87	1871	1	DOUBLE WALL DUCT - 14" INNER 45 DUCT - 2 LAYERS REDUCED CLEARANCE - 18' STAINLESS STEEL OUTER SHELL.
P5	DW1447DWAJD-2R-S	2000				-0.0117	93.18	1871	1	DOUBLE WALL ADJUSTABLE DUCT - 14" INNER DUCT - 2 LAYERS REDUCED CLEARANCE - 18' STAINLESS STEEL OUTER SHELL. MIN LENGTH = 11' / MAX LENGTH = 48.5' / ADJUSTMENT = 30.5' / ADJUSTABLE SECTION MAY NEED TO BE CUT. INCLUDES SINGLE AND DOUBLE WALL 'V' CLAMPS.
P6 ASSEMBLED W/P7	DW1435DWLTTP-2R-S	2000				-0.0182	48.06	1871	1	DOUBLE WALL DUCT - 14" INNER DUCT, 35' LONG - 2 LAYERS REDUCED CLEARANCE - 18' STAINLESS STEEL OUTER SHELL - USED WITH TRANSITION PLATE.
P7 ASSEMBLED W/P6 O=B	DW2614TPDBEX	2000					12.50	1871	1	DUCT TO CURB TRANSITION 3/4' DOWN TURN, 26-1/2' CURB TO 14' DUCT, 16 GA ALUMINIZED. FOR USE WITH EXHAUST FANS.
SYSTEM AT P7						-1.2434	0.00			
RC1	DW18DWRISER-2R-S						8.15		1	DOUBLE WALL RISER COVER - USED ON 14" INNER RISER, 4' LONG - 2 LAYERS REDUCED CLEARANCE - 18' STAINLESS STEEL OUTER RISER SHELL ASSEMBLY. INCLUDES INSULATION & SINGLE V CLAMPS FOR INNER & OUTER CONNECTIONS.
	3M-2000PLUS						0.80		1	DUCT - 3M FIRE BARRIER 2000 PLUS SILICONE - USED AS SEALANT TO SEAL DUCT JOINTS.
TOTAL WEIGHT							311.01			
TOTAL PRESSURE						-1.0252				

DOUBLE WALL FACTORY BUILT DUCTWORK

- ALL DUCTWORK IS REQUIRED TO BE INSTALLED WITH THE MAXIMUM SUPPORT SPACING LISTED BELOW.
- FOR A COMPLETE LIST OF APPROVED SUPPORT METHODS, SEE THE ENTIRE INSTALLATION AND OPERATION MANUAL
- DUCTWORK SHALL SLOPE NOT LESS THAN 1/16' PER LINEAR FOOT TOWARDS THE HOOD OR AN APPROVED GREASE COLLECTION RESERVOIR.
- WHERE HORIZONTAL DUCTS EXCEED 75 FEET IN LENGTH, THE SLOPE SHALL NOT BE LESS THAN 3/16' PER LINEAR FOOT.
- GREASE DUCT CLEANOUTS MAY BE REQUIRED BY LOCAL CODE, INTERNATIONAL MECHANICAL CODE, AND/OR NFPA 96. PLEASE CONSULT WITH THE ENGINEER OF RECORD TO ENSURE GREASE DUCT CLEANOUTS ARE PROPERLY PLACED AND ACCESSIBLE.
- GREASE DUCT CLEANOUTS NOT ACCESSIBLE BY A 10' STEP LADDER MUST BE PROVIDED WITH A WORK PLATFORM OR OTHER MEANS OF SAFE ACCESS, PROVIDED BY OTHERS.

HORIZONTAL	
DUCT DIAMETER	SUPPORT SPACING (FT)
5'	7'
6'	7'
7'	7'
8'	7'
10'	7'
12'	7'
14'	7'
16'	7'
18'	5'
20'	5'
22'	5'
24'	5'
26'	5'
28'	5'
30'	5'
32'	5'
34'	5'
36'	5'

VERTICAL			
TYPE	WALL SUPPORT (FT)	CURB SUPPORT (FT)	FLOOR SUPPORT (FT)
2R & 2R HT (5'-16')	20'	24'	24'
2R (18')	18'	24'	24'
3R & 3Z (5'-24')	10'	24'	24'
3Z (26' -36')	10'	20'	20'

DO NOT LEAK TEST USING SMOKE BOMBS CONTAINING CHLORINES/CHLORIDES. CONSULT WITH CAPTIVEAIRE FOR PROPER LEAK TESTING METHODS.

REVISIONS

DESCRIPTION	DATE:

CAPTIVEAIRE
www.captiveaire.com
Detroit Mechanical
38255 West Ten Mile Road, Farmington Hills, MI, 48335 PHONE: (248) 858 - 0509 FAX: 9195168735 EMAIL: reg123@captiveaire.com

Harbor Beach Home Ec R2
402 South 5th Street,
Harbor Beach, MI, 48441

DATE: 8/3/2026

DWG.#: 8615075

DRAWN BY: alex.donner

SCALE: 3/4" = 1'-0"

MASTER DRAWING

SHEET NO.
31

SUPPORT SYSTEM DETAILS #3

DW1822SADKIT - HORIZONTAL SUPPORTS

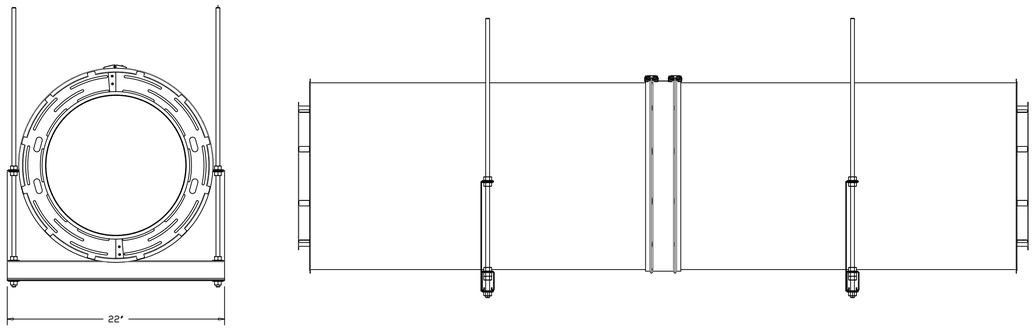

DUCTWORK #3 FRONT VIEW
HOOD 3

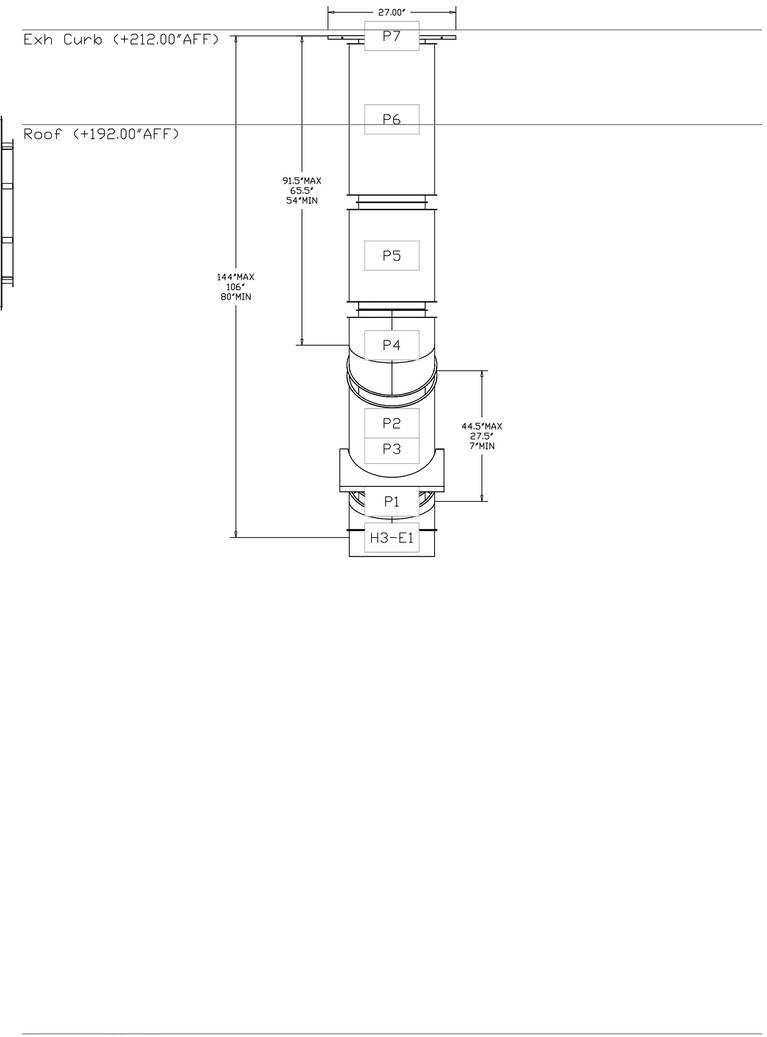

REVISIONS

DESCRIPTION	DATE:

CAPTIVEAIRE
www.captiveaire.com
Detroit Mechanical
38255 West Ten Mile Road, Farmington Hills, MI, 48335 PHONE: (248) 858 - 0509 FAX: 9195168735 EMAIL: reg123@captiveaire.com

Harbor Beach Home Ec R2
402 South 5th Street,
Harbor Beach, MI, 48441

DATE: 8/3/2026

DWG.#: 8615075

DRAWN BY: alex.donner

SCALE: 3/4" = 1'-0"

MASTER DRAWING

SHEET NO.
32

DUCTWORK #3 SIDE VIEW
HOOD 3

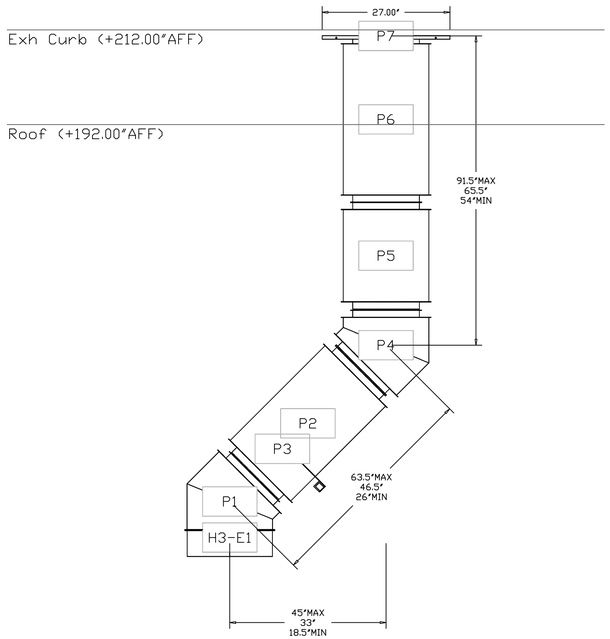

DUCTWORK #3 TOP VIEW
HOOD 3

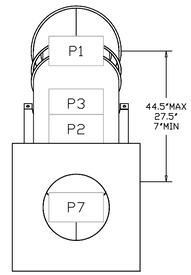

DUCTWORK #3 SE VIEW
HOOD 3

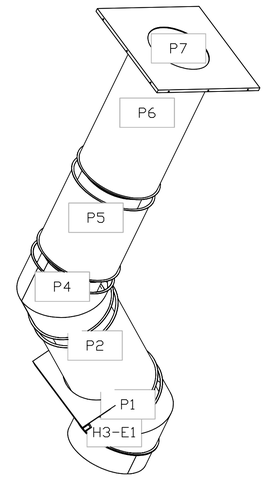

REVISIONS

DESCRIPTION	DATE:

CAPTIVEAIRE
www.captiveaire.com
Detroit Mechanical
38255 West Ten Mile Road, Farmington Hills, MI, 48335 PHONE: (248) 858 - 0509 FAX: 9195168735 EMAIL: reg123@captiveaire.com

Harbor Beach Home Ec R2
402 South 5th Street,
Harbor Beach, MI, 48441

DATE: 8/3/2026

DWG.#: 8615075

DRAWN BY: alex.donner

SCALE: 3/4" = 1'-0"

MASTER DRAWING

SHEET NO.
33

DUCTWORK #4 PARTS – JOB#8615075 DOUBLE WALL HOOD 4

TAG	PART #	CFM	GPM	ZONE	COVEREDBY	SP	WEIGHT	VELOCITY	QTY	DESCRIPTION
H4-E1	DW14DWRISER-2R-S	900				-0.6380	6.45		1	DOUBLE WALL RISER COVER - USED ON 10" INNER RISER, 4" LONG - 2 LAYERS REDUCED CLEARANCE - 14" STAINLESS STEEL OUTER RISER SHELL ASSEMBLY. INCLUDES INSULATION & SINGLE V CLAMPS FOR INNER & OUTER CONNECTIONS.
P1	DW1045DWASY-2R-S	900				-0.1010	13.60	1650	1	DOUBLE WALL DUCT - 10" INNER 45 DUCT - 2 LAYERS REDUCED CLEARANCE - 14" STAINLESS STEEL OUTER SHELL.
P2	DW1007DWLT-2R-S	900				-0.0040	8.97	1650	1	DOUBLE WALL DUCT - 10" INNER DUCT, 7" LONG - 2 LAYERS REDUCED CLEARANCE - 14" STAINLESS STEEL OUTER SHELL.
P3	DW1418SADKIT						5.82		1	DUCT - HORIZONTAL SADDLE SUPPORT KIT, USED WITH 14" OD - INCLUDES UNI-STRUT CUT TO LENGTH,, DW1418SAD, & HARDWARE BAG 4.
P4	DW1045DWASY-2R-S	900				-0.1010	13.60	1650	1	DOUBLE WALL DUCT - 10" INNER 45 DUCT - 2 LAYERS REDUCED CLEARANCE - 14" STAINLESS STEEL OUTER SHELL.
P5	DW1029DWLT-2R-S	900				-0.0165	31.19	1650	1	DOUBLE WALL DUCT - 10" INNER DUCT, 29" LONG - 2 LAYERS REDUCED CLEARANCE - 14" STAINLESS STEEL OUTER SHELL.
P6	DW1047DWAJD-2R-S	900				-0.0172	72.54	1650	1	DOUBLE WALL ADJUSTABLE DUCT - 10" INNER DUCT - 2 LAYERS REDUCED CLEARANCE - 14" STAINLESS STEEL OUTER SHELL. MIN LENGTH = 11" / MAX LENGTH = 49.5" / ADJUSTMENT = 31.5" / ADJUSTABLE SECTION MAY NEED TO BE CUT. INCLUDES SINGLE AND DOUBLE WALL "V" CLAMPS.
P7 ASSEMBLED W/P8	DW1035DWLTTP-2R-S	900				-0.0198	36.51	1650	1	DOUBLE WALL DUCT - 10" INNER DUCT, 35" LONG - 2 LAYERS REDUCED CLEARANCE - 14" STAINLESS STEEL OUTER SHELL - USED WITH TRANSITION PLATE.
P8 ASSEMBLED W/P7 O=B	DW2310TPDBEX	900					8.00	1650	1	DUCT TO CURB TRANSITION 3/4" DOWN TURN, 23" CURB TO 10" DUCT, 16 GA ALUMINIZED. FOR USE WITH EXHAUST FANS.
SYSTEM AT P8						-0.8975	0.00			
RC1	DW14DWRISER-2R-S						6.45		1	DOUBLE WALL RISER COVER - USED ON 10" INNER RISER, 4" LONG - 2 LAYERS REDUCED CLEARANCE - 14" STAINLESS STEEL OUTER RISER SHELL ASSEMBLY. INCLUDES INSULATION & SINGLE V CLAMPS FOR INNER & OUTER CONNECTIONS.
	3M-2000PLUS						0.80		1	DUCT - 3M FIRE BARRIER 2000 PLUS SILICONE - USED AS SEALANT TO SEAL DUCT JOINTS.
	DW10DWCLASY-2R-S						5.67		3	DUCT - 10" DUCT - 14" DOUBLE "V" CLAMP - 2R INSULATION & SINGLE "V" CLAMP INCLUDED - REDUCED CLEARANCE.
TOTAL WEIGHT							220.94			
TOTAL PRESSURE						-0.7277				

DOUBLE WALL FACTORY BUILT DUCTWORK

- ALL DUCTWORK IS REQUIRED TO BE INSTALLED WITH THE MAXIMUM SUPPORT SPACING LISTED BELOW.
- FOR A COMPLETE LIST OF APPROVED SUPPORT METHODS, SEE THE ENTIRE INSTALLATION AND OPERATION MANUAL
- DUCTWORK SHALL SLOPE NOT LESS THAN 1/16" PER LINEAR FOOT TOWARDS THE HOOD OR AN APPROVED GREASE COLLECTION RESERVOIR.
- WHERE HORIZONTAL DUCTS EXCEED 75 FEET IN LENGTH, THE SLOPE SHALL NOT BE LESS THAN 3/16" PER LINEAR FOOT.
- GREASE DUCT CLEANOUTS MAY BE REQUIRED BY LOCAL CODE, INTERNATIONAL MECHANICAL CODE, AND/OR NFPA 96. PLEASE CONSULT WITH THE ENGINEER OF RECORD TO ENSURE GREASE DUCT CLEANOUTS ARE PROPERLY PLACED AND ACCESSIBLE.
- GREASE DUCT CLEANOUTS NOT ACCESSIBLE BY A 10' STEP LADDER MUST BE PROVIDED WITH A WORK PLATFORM OR OTHER MEANS OF SAFE ACCESS, PROVIDED BY OTHERS.

HORIZONTAL	
DUCT DIAMETER	SUPPORT SPACING (FT)
5"	7'
6"	7'
7"	7'
8"	7'
10"	7'
12"	7'
14"	7'
16"	7'
18"	5'
20"	5'
22"	5'
24"	5'
26"	5'
28"	5'
30"	5'
32"	5'
34"	5'
36"	5'

VERTICAL			
TYPE	WALL SUPPORT (FT)	CURB SUPPORT (FT)	FLOOR SUPPORT (FT)
2R & 2R HT (5"-16")	20'	24'	24'
2R (18")	18'	24'	24'
3R & 3Z (5"-24")	10'	24'	24'
3Z (26" -36")	10'	20'	20'

DO NOT LEAK TEST USING SMOKE BOMBS CONTAINING CHLORINES/CHLORIDES. CONSULT WITH CAPTIVEAIRE FOR PROPER LEAK TESTING METHODS.

REVISIONS

DESCRIPTION	DATE:

CAPTIVEAIRE
www.captiveaire.com
Detroit Mechanical
38255 West Ten Mile Road, Farmington Hills, MI, 48335 PHONE: (248) 658 - 0509 FAX: 9195168735 EMAIL: reg123@captiveaire.com

Harbor Beach Home Ec R2
402 South 5th Street,
Harbor Beach, MI, 48441

DATE: 8/3/2026

DWG.#: 8615075

DRAWN BY: alex.donner

SCALE: 3/4" = 1'-0"

MASTER DRAWING

SHEET NO.
34

SUPPORT SYSTEM DETAILS #4

DW1418SADKIT - HORIZONTAL SUPPORTS

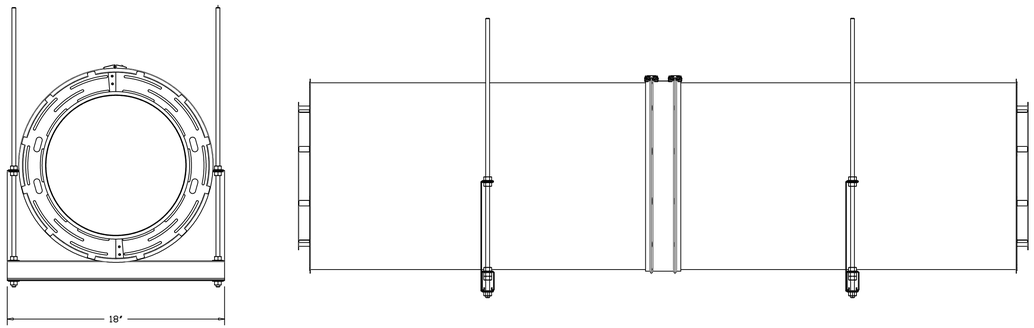

DUCTWORK #4 SIDE VIEW
HOOD 4

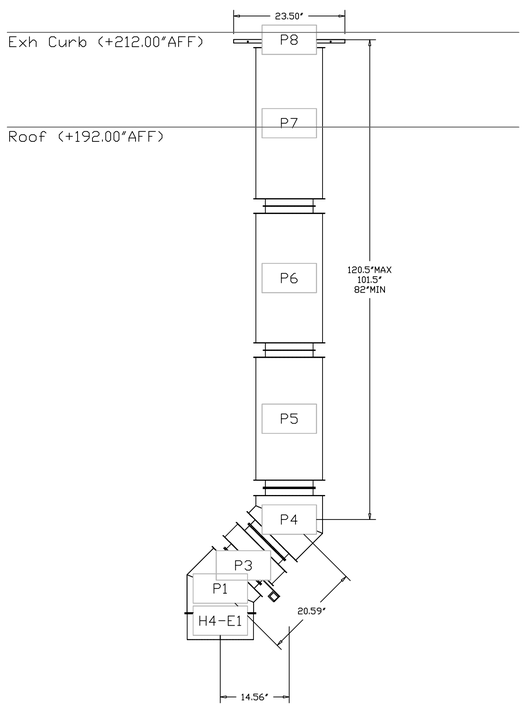

DUCTWORK #4 FRONT VIEW
HOOD 4

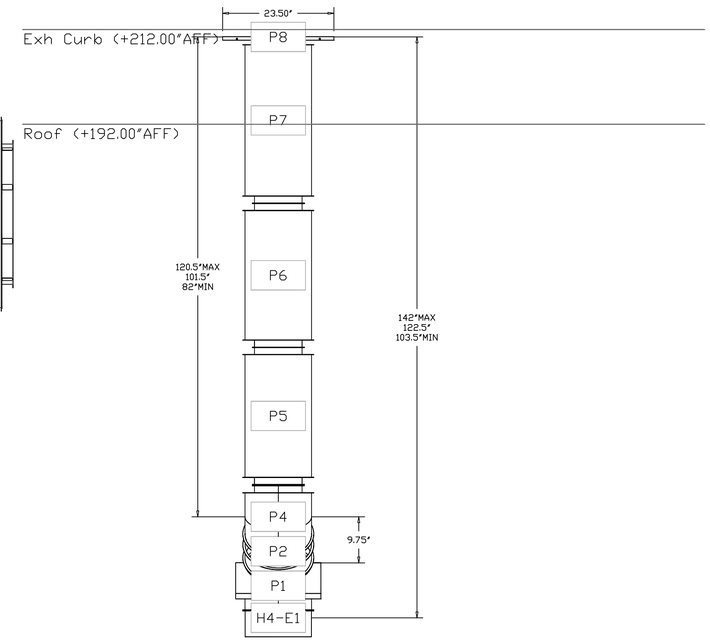

DUCTWORK #4 TOP VIEW
HOOD 4

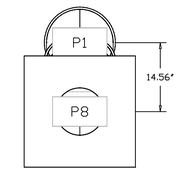

DUCTWORK #4 SE VIEW
HOOD 4

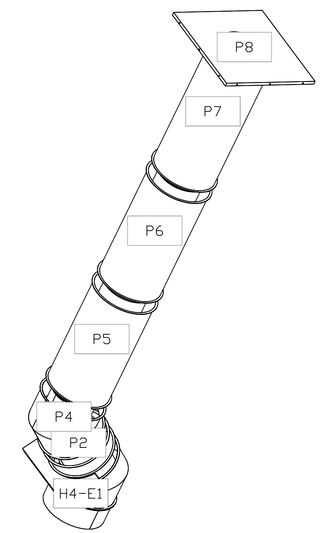

REVISIONS

DESCRIPTION	DATE:

CAPTIVEAIRE
www.captiveaire.com
Detroit Mechanical
38255 West Ten Mile Road, Farmington Hills, MI, 48335 PHONE: (248) 858 - 0509 FAX: 9195168735 EMAIL: reg123@captiveaire.com

Harbor Beach Home Ec R2
402 South 5th Street,
Harbor Beach, MI, 48441

DATE: 8/3/2026

DWG.#: 8615075

DRAWN BY: alex.donner

SCALE: 3/4" = 1'-0"

MASTER DRAWING

SHEET NO.
35

SYSTEM DESIGN VERIFICATION (SDV)

IF ORDERED, CAS SERVICE WILL PERFORM A SYSTEM DESIGN VERIFICATION (SDV) ONCE ALL EQUIPMENT HAS HAD A COMPLETE START UP PER THE OPERATION AND INSTALLATION MANUAL. TYPICALLY, THE SDV WILL BE PERFORMED AFTER ALL INSPECTIONS ARE COMPLETE.

ANY FIELD RELATED DISCREPANCIES THAT ARE DISCOVERED DURING THE SDV WILL BE BROUGHT TO THE
ATTENTION OF THE GENERAL CONTRACTOR AND CORRESPONDING TRADES ON SITE. THESE ISSUES WILL BE DOCUMENTED AND FORWARDED TO THE APPROPRIATE SALES OFFICE. IF CAS SERVICE HAS TO
RESOLVE A DISCREPANCY THAT IS A FIELD ISSUE, THE GENERAL CONTRACTOR WILL BE NOTIFIED AND BILLED FOR THE WORK. SHOULD A RETURN TRIP BE REQUIRED DUE TO ANY FIELD RELATED DISCREPANCY THAT CANNOT BE RESOLVED DURING THE SDV, THERE WILL BE ADDITIONAL TRIP CHARGES.

DURING THE SDV, CAS SERVICE WILL ADDRESS ANY DISCREPANCY THAT IS THE FAULT OF THE MANUFACTURER. SHOULD A RETURN TRIP BE REQUIRED, THE GENERAL CONTRACTOR AND APPROPRIATE SALES OFFICE WILL BE NOTIFIED. THERE WILL BE NO ADDITIONAL CHARGES FOR MANUFACTURER DISCREPANCIES.

REVISIONS

DESCRIPTION	DATE:

CAPTIVEAIRE
www.captiveaire.com
Detroit Mechanical
38255 West Ten Mile Road, Farmington Hills, MI, 48335 PHONE: (248) 658 - 0509 FAX: 9195168735 EMAIL: reg123@captiveaire.com

Harbor Beach Home Ec R2
402 South 5th Street,
Harbor Beach, MI, 48441

DATE: 8/3/2026

DWG.#: 8615075

DRAWN BY: alex.donner

SCALE: 3/4" = 1'-0"

MASTER DRAWING

SHEET NO. 36